2018

ILLINOIS REGISTER

Rules of
Governmental Agencies

Volume 42, Issue 45

November 9, 2018

Pages 19,557 - 20,173

Index Department
Administrative Code Division
111 E. Monroe St.
Springfield, IL 62756
217-782-7017

Printed by authority of the State of Illinois. November --- 70

PUBLISHED BY JESSE WHITE • SECRETARY OF STATE

TABLE OF CONTENTS

November 9, 2018 Volume 42, Issue 45

PROPOSED RULES
HEALTHCARE AND FAMILY SERVICES, DEPARTMENT OF
Medical Payment
89 Ill. Adm. Code 140.....19557
INSURANCE, DEPARTMENT OF
Internal Security Standards and Fidelity Bonds
50 Ill. Adm. Code 3501.....19595
REVENUE, DEPARTMENT OF
Income Tax
86 Ill. Adm. Code 100.....19605
ADOPTED RULES
CAPITAL DEVELOPMENT BOARD
Illinois Accessibility Code (Repealer)
71 Ill. Adm. Code 400.....19693
Illinois Accessibility Code (New Part)
71 Ill. Adm. Code 400.....19696
COMMERCE AND ECONOMIC OPPORTUNITY, DEPARTMENT OF
State Administration of the Federal Community Development
Block Grant Program for Small Cities
47 Ill. Adm. Code 110.....19976
FINANCIAL AND PROFESSIONAL REGULATION, DEPARTMENT OF
Pharmacy Practice Act
68 Ill. Adm. Code 1330.....20022
HEALTHCARE AND FAMILY SERVICES, DEPARTMENT OF
Medical Payment
89 Ill. Adm. Code 140.....20059
HUMAN SERVICES, DEPARTMENT OF
Administration of Medication in Community Settings
59 Ill. Adm. Code 116.....20083
INSURANCE, DEPARTMENT OF
Illinois Insurance Exchange Annual Statement (Repealer)
50 Ill. Adm. Code 551.....20091
License and Documents Necessary to Engage in Activities and
Examinations
50 Ill. Adm. Code 752.....20093
Uniform Accounting Instructions for Fire and Marine and Casualty and
Surety Insurers (Repealer)
50 Ill. Adm. Code 903.....20098
Internal Security Standard and Fidelity Bonds
50 Ill. Adm. Code 904.....20101
Mid-Term Cancellations

50 Ill. Adm. Code 940.....20108
Admitted Assets (Repealer)
50 Ill. Adm. Code 945.....20113
RACING BOARD, ILLINOIS
Approval of Racing Officials
11 Ill. Adm. Code 422.....20115
Licensing
11 Ill. Adm. Code 502.....20121
REVENUE, DEPARTMENT OF
Illinois Hydraulic Fracturing Act
86 Ill. Adm. Code 475.....20127
JOINT COMMITTEE ON ADMINISTRATIVE RULES AGENDA
JOINT COMMITTEE ON ADMINISTRATIVE RULES
November Agenda…….....20159
SECOND NOTICES RECEIVED
JOINT COMMITTEE ON ADMINISTRATIVE RULES
Second Notices Received….....20166
EXECUTIVE ORDERS AND PROCLAMATIONS
EXECUTIVE ORDERS
Executive Order Establishing the Autonomous Illinois Initiative
2018-13…….....20168

INTRODUCTION

The *Illinois Register* is the official state document for publishing public notice of rulemaking activity initiated by State governmental agencies. The table of contents is arranged categorically by rulemaking activity and alphabetically by agency within each category.

Rulemaking activity consists of proposed or adopted new rules; amendments to or repealers of existing rules; and rules promulgated by emergency or peremptory action. Executive Orders and Proclamations issued by the Governor; notices of public information required by State Statute; and activities (meeting agendas; Statements of Objection or Recommendation, etc.) of the Joint Committee on Administrative Rules (JCAR), a legislative oversight committee which monitors the rulemaking activities of State Agencies; is also published in the Register.

The Register is a weekly update of the Illinois Administrative Code (a compilation of the rules adopted by State agencies). The most recent edition of the Code, along with the Register, comprise the most current accounting of State agencies' rulemakings.

The *Illinois Register* is the property of the State of Illinois, granted by the authority of the Illinois Administrative Procedure Act [5 ILCS 100/1-1, et seq.].

ILLINOIS REGISTER PUBLICATION SCHEDULE FOR 2018

Issue#	Rules Due Date	Date of Issue
1	December 26, 2017	January 5, 2018
2	January 2, 2018	January 12, 2018
3	January 8, 2018	January 19, 2018
4	January 16, 2018	January 26, 2018
5	January 22, 2018	February 2, 2018
6	January 29, 2018	February 9, 2018
7	February 5, 2018	February 16, 2018
8	February 13, 2018	February 23, 2018
9	February 20, 2018	March 2, 2018
10	February 26, 2018	March 9, 2018
11	March 5, 2018	March 16, 2018
12	March 12, 2018	March 23, 2018
13	March 19, 2018	March 30, 2018
14	March 26, 2018	April 6, 2018
15	April 2, 2018	April 13, 2018
16	April 9, 2018	April 20, 2018
17	April 16, 2018	April 27, 2018
18	April 23, 2018	May 4, 2018
19	April 30, 2018	May 11, 2018
20	May 7, 2018	May 18, 2018
21	May 14, 2018	May 25, 2018
22	May 21, 2018	June 1, 2018
23	May 29, 2018	June 8, 2018
24	June 4, 2018	June 15, 2018
25	June 11, 2018	June 22, 2018

26	June 18, 2018	June 29, 2018
27	June 25, 2018	July 6, 2018
28	July 2, 2018	July 13, 2018
29	July 9, 2018	July 20, 2018
30	July 16, 2018	July 27, 2018
31	July 23, 2018	August 3, 2018
32	July 30, 2018	August 10, 2018
33	August 6, 2018	August 17, 2018
34	August 13, 2018	August 24, 2018
35	August 20, 2018	August 31, 2018
36	August 27, 2018	September 7, 2018
37	September 4, 2018	September 14, 2018
38	September 10, 2018	September 21, 2018
39	September 17, 2018	September 28, 2018
40	September 24, 2018	October 5, 2018
41	October 1, 2018	October 12, 2018
42	October 9, 2018	October 19, 2018
43	October 15, 2018	October 26, 2018
44	October 22, 2018	November 2, 2018
45	October 29, 2018	November 9, 2018
46	November 5, 2018	November 16, 2018
47	November 13, 2018	November 26, 2018
48	November 19, 2018	November 30, 2018
49	November 26, 2018	December 7, 2018
50	December 3, 2018	December 14, 2018
51	December 10, 2018	December 21, 2018
52	December 17, 2018	December 28, 2018

DEPARTMENT OF HEALTHCARE AND FAMILY SERVICES

NOTICE OF PROPOSED AMENDMENTS

1) Heading of the Part: Medical Payment

2) Code Citation: 89 Ill. Adm. Code 140

3)

Section Numbers:	Proposed Actions:
140.462	Amendment
140.490	Amendment

4) Statutory Authority: Section 12-13 of the Illinois Public Aid Code [305 ILCS 5/12-13]

5) Complete Description of the Subjects and Issues Involved: These proposed amendments implement: 1) PA 100-974 by allowing Federally Qualified Health Centers (FQHCs) to seek reimbursement for services performed by dental hygienists, and 2) PA 100-646 by updating the medical transportation service definitions for medi-car and service car.

6) Published studies or reports, and sources of underlying data, used to compose this rulemaking: None

7) Will this rulemaking replace any emergency rule currently in effect? No

8) Does this rulemaking contain an automatic repeal date? No

9) Does this rulemaking contain incorporations by reference? No

10) Are there any other rulemakings pending on this Part? Yes

Section Numbers:	Proposed Actions:	*Illinois Register* Citations:
140.3	Amendment	42 Ill. Reg. 7285; April 20, 2018
140.6	Amendment	42 Ill. Reg. 7285; April 20, 2018
140.413	Amendment	42 Ill. Reg. 7285; April 20, 2018
140.421	Amendment	42 Ill. Reg. 8119; May 18, 2018
140.513	Amendment	42 Ill. Reg. 9052; June 8, 2018
140.80	Amendment	42 Ill. Reg. 13411; July 13, 2018
140.452	Amendment	42 Ill. Reg. 14043; July 20, 2018
140.453	Amendment	42 Ill. Reg. 14043; July 20, 2018
140.455	Amendment	42 Ill. Reg. 14043; July 20, 2018
140.460	Amendment	42 Ill. Reg. 14043; July 20, 2018
140.TABLE N	Amendment	42 Ill. Reg. 14043; July 20, 2018
140.421	Amendment	42 Ill. Reg. 16364; August 31, 2018

DEPARTMENT OF HEALTHCARE AND FAMILY SERVICES

NOTICE OF PROPOSED AMENDMENTS

140.492	Amendment	42 Ill. Reg. 16364; August 31, 2018
140.TABLE D	Amendment	42 Ill. Reg. 16364; August 31, 2018
140.439	New Section	42 Ill. Reg. 17067; September 28, 2018
140.990	Amendment	42 Ill. Reg. 18242; October 12, 2018
140.991	Amendment	42 Ill. Reg. 18242; October 12, 2018
140.993	Amendment	42 Ill. Reg. 18242; October 12, 2018
140.994	Amendment	42 Ill. Reg. 18242; October 12, 2018
140.995	Repealed	42 Ill. Reg. 18242; October 12, 2018
140.996	Repealed	42 Ill. Reg. 18242; October 12, 2018
140.997	Repealed	42 Ill. Reg. 18242; October 12, 2018

11) Statement of Statewide Policy Objective: This rulemaking does not affect units of local government.

12) Time, Place, and Manner in which interested persons may comment on this proposed rulemaking: Any interested parties may submit comments, data, views, or arguments concerning this proposed rulemaking. All comments must be in writing and should be addressed to:

Christopher Gange
Acting General Counsel
Illinois Department of Healthcare and Family Services
201 South Grand Avenue East, 3rd Floor
Springfield IL 62763-0002

HFS.Rules@illinois.gov

The Department requests the submission of written comments within 45 days after the publication of this Notice. The Department will consider all written comments it receives during the first notice period as required by Section 5-40 of the Illinois Administrative Procedure Act [5 ILCS 100/5-40].

13) Initial Regulatory Flexibility Analysis:

A) Types of small businesses, small municipalities and not-for-profit corporations affected: None

B) Reporting, bookkeeping or other procedures required for compliance: None

DEPARTMENT OF HEALTHCARE AND FAMILY SERVICES

NOTICE OF PROPOSED AMENDMENTS

C) Types of professional skills necessary for compliance: None

14) Regulatory Agenda on which this rulemaking was summarized: July 2018

The full text of the Proposed Amendments begins on the next page:

DEPARTMENT OF HEALTHCARE AND FAMILY SERVICES

NOTICE OF PROPOSED AMENDMENTS

TITLE 89: SOCIAL SERVICES
CHAPTER I: DEPARTMENT OF HEALTHCARE AND FAMILY SERVICES
SUBCHAPTER d: MEDICAL PROGRAMS

PART 140
MEDICAL PAYMENT

SUBPART A: GENERAL PROVISIONS

Section
140.1 Incorporation By Reference
140.2 Medical Assistance Programs
140.3 Covered Services Under Medical Assistance Programs
140.4 Covered Medical Services Under AFDC-MANG for non-pregnant persons who are 18 years of age or older (Repealed)
140.5 Covered Medical Services Under General Assistance
140.6 Medical Services Not Covered
140.7 Medical Assistance Provided to Individuals Under the Age of Eighteen Who Do Not Qualify for AFDC and Children Under Age Eight
140.8 Medical Assistance For Qualified Severely Impaired Individuals
140.9 Medical Assistance for a Pregnant Woman Who Would Not Be Categorically Eligible for AFDC/AFDC-MANG if the Child Were Already Born Or Who Do Not Qualify As Mandatory Categorically Needy
140.10 Medical Assistance Provided to Persons Confined or Detained by the Criminal Justice System

SUBPART B: MEDICAL PROVIDER PARTICIPATION

Section
140.11 Enrollment Conditions for Medical Providers
140.12 Participation Requirements for Medical Providers
140.13 Definitions
140.14 Denial of Application to Participate in the Medical Assistance Program
140.15 Suspension and Denial of Payment, Recovery of Money and Penalties
140.16 Termination, Suspension or Exclusion of a Vendor's Eligibility to Participate in the Medical Assistance Program
140.17 Suspension of a Vendor's Eligibility to Participate in the Medical Assistance Program
140.18 Effect of Termination, Suspension, Exclusion or Revocation on Persons

DEPARTMENT OF HEALTHCARE AND FAMILY SERVICES

NOTICE OF PROPOSED AMENDMENTS

Associated with Vendor
140.19 Application to Participate or for Reinstatement Subsequent to Termination, Suspension, Exclusion or Barring
140.20 Submittal of Claims
140.21 Reimbursement for QMB Eligible Medical Assistance Recipients and QMB Eligible Only Recipients and Individuals Who Are Entitled to Medicare Part A or Part B and Are Eligible for Some Form of Medicaid Benefits
140.22 Magnetic Tape Billings (Repealed)
140.23 Payment of Claims
140.24 Payment Procedures
140.25 Overpayment or Underpayment of Claims
140.26 Payment to Factors Prohibited
140.27 Assignment of Vendor Payments
140.28 Record Requirements for Medical Providers
140.30 Audits
140.31 Emergency Services Audits
140.32 Prohibition on Participation, and Special Permission for Participation
140.33 Publication of List of Sanctioned Entities
140.35 False Reporting and Other Fraudulent Activities
140.40 Prior Approval for Medical Services or Items
140.41 Prior Approval in Cases of Emergency
140.42 Limitation on Prior Approval
140.43 Post Approval for Items or Services When Prior Approval Cannot Be Obtained
140.44 Withholding of Payments Due to Fraud or Misrepresentation
140.45 Withholding of Payments Upon Provider Audit, Quality of Care Review, Credible Allegation of Fraud or Failure to Cooperate
140.55 Electronic Data Interchange Service
140.71 Reimbursement for Medical Services Through the Use of a C-13 Invoice Voucher Advance Payment and Expedited Payments
140.72 Drug Manual (Recodified)
140.73 Drug Manual Updates (Recodified)
140.74 Resolution of Claims Related to Inaccurate or Updated Enrollment Information

SUBPART C: PROVIDER ASSESSMENTS

Section
140.80 Hospital Provider Fund
140.82 Developmentally Disabled Care Provider Fund
140.84 Long Term Care Provider Fund

DEPARTMENT OF HEALTHCARE AND FAMILY SERVICES

NOTICE OF PROPOSED AMENDMENTS

140.86	Supportive Living Facility Funds
140.94	Medicaid Developmentally Disabled Provider Participation Fee Trust Fund/Medicaid Long Term Care Provider Participation Fee Trust Fund (Repealed)
140.95	Hospital Services Trust Fund (Repealed)
140.96	General Requirements (Recodified)
140.97	Special Requirements (Recodified)
140.98	Covered Hospital Services (Recodified)
140.99	Hospital Services Not Covered (Recodified)
140.100	Limitation On Hospital Services (Recodified)
140.101	Transplants (Recodified)
140.102	Heart Transplants (Recodified)
140.103	Liver Transplants (Recodified)
140.104	Bone Marrow Transplants (Recodified)
140.110	Disproportionate Share Hospital Adjustments (Recodified)
140.116	Payment for Inpatient Services for GA (Recodified)
140.117	Hospital Outpatient and Clinic Services (Recodified)
140.200	Payment for Hospital Services During Fiscal Year 1982 (Recodified)
140.201	Payment for Hospital Services After June 30, 1982 (Repealed)
140.202	Payment for Hospital Services During Fiscal Year 1983 (Recodified)
140.203	Limits on Length of Stay by Diagnosis (Recodified)
140.300	Payment for Pre-operative Days and Services Which Can Be Performed in an Outpatient Setting (Recodified)
140.350	Copayments (Recodified)
140.360	Payment Methodology (Recodified)
140.361	Non-Participating Hospitals (Recodified)
140.362	Pre July 1, 1989 Services (Recodified)
140.363	Post June 30, 1989 Services (Recodified)
140.364	Prepayment Review (Recodified)
140.365	Base Year Costs (Recodified)
140.366	Restructuring Adjustment (Recodified)
140.367	Inflation Adjustment (Recodified)
140.368	Volume Adjustment (Repealed)
140.369	Groupings (Recodified)
140.370	Rate Calculation (Recodified)
140.371	Payment (Recodified)
140.372	Review Procedure (Recodified)
140.373	Utilization (Repealed)
140.374	Alternatives (Recodified)

DEPARTMENT OF HEALTHCARE AND FAMILY SERVICES

NOTICE OF PROPOSED AMENDMENTS

140.375 Exemptions (Recodified)
140.376 Utilization, Case-Mix and Discretionary Funds (Repealed)
140.390 Subacute Alcoholism and Substance Abuse Services (Recodified)
140.391 Definitions (Recodified)
140.392 Types of Subacute Alcoholism and Substance Abuse Services (Recodified)
140.394 Payment for Subacute Alcoholism and Substance Abuse Services (Recodified)
140.396 Rate Appeals for Subacute Alcoholism and Substance Abuse Services (Recodified)
140.398 Hearings (Recodified)

SUBPART D: PAYMENT FOR NON-INSTITUTIONAL SERVICES

Section
140.400 Payment to Practitioners
140.402 Copayments for Noninstitutional Medical Services
140.403 Telehealth Services
140.405 Non-Institutional Rate Reductions
140.410 Physicians' Services
140.411 Covered Services By Physicians
140.412 Services Not Covered By Physicians
140.413 Limitation on Physician Services
140.414 Requirements for Prescriptions and Dispensing of Pharmacy Items – Prescribers
140.416 Optometric Services and Materials
140.417 Limitations on Optometric Services
140.418 Department of Corrections Laboratory
140.420 Dental Services
140.421 Limitations on Dental Services
140.422 Requirements for Prescriptions and Dispensing Items of Pharmacy Items – Dentists (Repealed)
140.423 Licensed Clinical Psychologist Services
140.424 Licensed Clinical Social Worker Services
140.425 Podiatry Services
140.426 Limitations on Podiatry Services
140.427 Requirement for Prescriptions and Dispensing of Pharmacy Items – Podiatry (Repealed)
140.428 Chiropractic Services
140.429 Limitations on Chiropractic Services (Repealed)
140.430 Independent Clinical Laboratory Services
140.431 Services Not Covered by Independent Clinical Laboratories

DEPARTMENT OF HEALTHCARE AND FAMILY SERVICES

NOTICE OF PROPOSED AMENDMENTS

140.432 Limitations on Independent Clinical Laboratory Services
140.433 Payment for Clinical Laboratory Services
140.434 Record Requirements for Independent Clinical Laboratories
140.435 Advanced Practice Nurse Services
140.436 Limitations on Advanced Practice Nurse Services
140.438 Diagnostic Imaging Services
140.440 Pharmacy Services
140.441 Pharmacy Services Not Covered
140.442 Prior Approval of Prescriptions
140.443 Filling of Prescriptions
140.444 Compounded Prescriptions
140.445 Legend Prescription Items (Not Compounded)
140.446 Over-the-Counter Items
140.447 Reimbursement
140.448 Returned Pharmacy Items
140.449 Payment of Pharmacy Items
140.450 Record Requirements for Pharmacies
140.451 Prospective Drug Review and Patient Counseling
140.452 Community-based Mental Health Providers Qualified for Payment
140.453 Community-based Mental Health Service Definitions and Professional Qualifications
140.454 Types of Mental Health Services
140.455 Payment for Mental Health Services
140.456 Hearings
140.457 Therapy Services
140.458 Prior Approval for Therapy Services
140.459 Payment for Therapy Services
140.460 Clinic Services
140.461 Clinic Participation, Data and Certification Requirements
140.462 Covered Services in Clinics
140.463 Clinic Service Payment
140.464 Hospital-Based and Encounter Rate Clinic Payments
140.465 Speech and Hearing Clinics (Repealed)
140.466 Rural Health Clinics (Repealed)
140.467 Independent Clinics
140.469 Hospice
140.470 Eligible Home Health Care, Nursing and Public Health Providers
140.471 Description of Home Health Care Services
140.472 Home Health Care Services

DEPARTMENT OF HEALTHCARE AND FAMILY SERVICES

NOTICE OF PROPOSED AMENDMENTS

140.473 Prior Approval for Home Health Care Services
140.474 Payment for Home Health Care Services
140.475 Medical Equipment, Supplies, Prosthetic Devices and Orthotic Devices
140.476 Medical Equipment, Supplies, Prosthetic Devices and Orthotic Devices for Which Payment Will Not Be Made
140.477 Limitations on Equipment, Prosthetic Devices and Orthotic Devices
140.478 Prior Approval for Medical Equipment, Supplies, Prosthetic Devices and Orthotic Devices
140.479 Limitations, Medical Supplies
140.480 Equipment Rental Limitations
140.481 Payment for Medical Equipment, Supplies, Prosthetic Devices and Hearing Aids
140.482 Family Planning Services
140.483 Limitations on Family Planning Services
140.484 Payment for Family Planning Services
140.485 Healthy Kids Program
140.486 Illinois Healthy Women
140.487 Healthy Kids Program Timeliness Standards
140.488 Periodicity Schedules, Immunizations and Diagnostic Laboratory Procedures
140.490 Medical Transportation
140.491 Medical Transportation Limitations and Authorization Process
140.492 Payment for Medical Transportation
140.493 Payment for Helicopter Transportation
140.494 Record Requirements for Medical Transportation Services
140.495 Psychological Services
140.496 Payment for Psychological Services
140.497 Hearing Aids
140.498 Fingerprint-Based Criminal Background Checks
140.499 Behavioral Health Clinic

SUBPART E: GROUP CARE

Section
140.500 Long Term Care Services
140.502 Cessation of Payment at Federal Direction
140.503 Cessation of Payment for Improper Level of Care
140.504 Cessation of Payment Because of Termination of Facility
140.505 Informal Hearing Process for Denial of Payment for New ICF/MR
140.506 Provider Voluntary Withdrawal
140.507 Continuation of Provider Agreement

DEPARTMENT OF HEALTHCARE AND FAMILY SERVICES

NOTICE OF PROPOSED AMENDMENTS

140.510 Determination of Need for Group Care
140.511 Long Term Care Services Covered By Department Payment
140.512 Utilization Control
140.513 Notification of Change in Resident Status
140.514 Certifications and Recertifications of Care (Repealed)
140.515 Management of Recipient Funds – Personal Allowance Funds
140.516 Recipient Management of Funds
140.517 Correspondent Management of Funds
140.518 Facility Management of Funds
140.519 Use or Accumulation of Funds
140.520 Management of Recipient Funds – Local Office Responsibility
140.521 Room and Board Accounts
140.522 Reconciliation of Recipient Funds
140.523 Bed Reserves
140.524 Cessation of Payment Due to Loss of License
140.525 Quality Incentive Program (QUIP) Payment Levels
140.526 County Contribution to Medicaid Reimbursement (Repealed)
140.527 Quality Incentive Survey (Repealed)
140.528 Payment of Quality Incentive (Repealed)
140.529 Reviews (Repealed)
140.530 Basis of Payment for Long Term Care Services
140.531 General Service Costs
140.532 Health Care Costs
140.533 General Administration Costs
140.534 Ownership Costs
140.535 Costs for Interest, Taxes and Rent
140.536 Organization and Pre-Operating Costs
140.537 Payments to Related Organizations
140.538 Special Costs
140.539 Reimbursement for Basic Nursing Assistant, Developmental Disabilities Aide, Basic Child Care Aide and Habilitation Aide Training and Nursing Assistant Competency Evaluation
140.540 Costs Associated With Nursing Home Care Reform Act and Implementing Regulations
140.541 Salaries Paid to Owners or Related Parties
140.542 Cost Reports – Filing Requirements
140.543 Time Standards for Filing Cost Reports
140.544 Access to Cost Reports (Repealed)
140.545 Penalty for Failure to File Cost Reports

DEPARTMENT OF HEALTHCARE AND FAMILY SERVICES

NOTICE OF PROPOSED AMENDMENTS

140.550 Update of Operating Costs
140.551 General Service Costs Updates
140.552 Nursing and Program Costs
140.553 General Administrative Costs Updates
140.554 Component Inflation Index (Repealed)
140.555 Minimum Wage
140.560 Components of the Base Rate Determination
140.561 Support Costs Components
140.562 Nursing Costs
140.563 Capital Costs
140.565 Kosher Kitchen Reimbursement
140.566 Out-of-State Placement
140.567 Level II Incentive Payments (Repealed)
140.568 Duration of Incentive Payments (Repealed)
140.569 Clients With Exceptional Care Needs
140.570 Capital Rate Component Determination
140.571 Capital Rate Calculation
140.572 Total Capital Rate
140.573 Other Capital Provisions
140.574 Capital Rates for Rented Facilities
140.575 Newly Constructed Facilities (Repealed)
140.576 Renovations (Repealed)
140.577 Capital Costs for Rented Facilities (Renumbered)
140.578 Property Taxes
140.579 Specialized Living Centers
140.580 Mandated Capital Improvements (Repealed)
140.581 Qualifying as Mandated Capital Improvement (Repealed)
140.582 Cost Adjustments
140.583 Campus Facilities
140.584 Illinois Municipal Retirement Fund (IMRF)
140.590 Audit and Record Requirements
140.642 Screening Assessment for Nursing Facility and Alternative Residential Settings and Services
140.643 In-Home Care Program
140.645 Home and Community Based Services Waivers for Medically Fragile, Technology Dependent, Disabled Persons Under Age 21 (Repealed)
140.646 Reimbursement for Developmental Training (DT) Services for Individuals With Developmental Disabilities Who Reside in Long Term Care (ICF and SNF) and Residential (ICF/MR) Facilities

DEPARTMENT OF HEALTHCARE AND FAMILY SERVICES

NOTICE OF PROPOSED AMENDMENTS

140.647 Description of Developmental Training (DT) Services
140.648 Determination of the Amount of Reimbursement for Developmental Training (DT) Programs
140.649 Effective Dates of Reimbursement for Developmental Training (DT) Programs
140.650 Certification of Developmental Training (DT) Programs
140.651 Decertification of Day Programs
140.652 Terms of Assurances and Contracts
140.680 Effective Date Of Payment Rate
140.700 Discharge of Long Term Care Residents
140.830 Appeals of Rate Determinations
140.835 Determination of Cap on Payments for Long Term Care (Repealed)

SUBPART F: FEDERAL CLAIMING FOR STATE AND LOCAL GOVERNMENTAL ENTITIES

Section
140.850 Reimbursement of Administrative Expenditures
140.855 Administrative Claim Review and Reconsideration Procedure
140.860 County Owned or Operated Nursing Facilities
140.865 Sponsor Qualifications (Repealed)
140.870 Sponsor Responsibilities (Repealed)
140.875 Department Responsibilities (Repealed)
140.880 Provider Qualifications (Repealed)
140.885 Provider Responsibilities (Repealed)
140.890 Payment Methodology (Repealed)
140.895 Contract Monitoring (Repealed)
140.896 Reimbursement For Program Costs (Active Treatment) For Clients in Long Term Care Facilities For the Developmentally Disabled (Recodified)
140.900 Reimbursement For Nursing Costs For Geriatric Residents in Group Care Facilities (Recodified)
140.901 Functional Areas of Needs (Recodified)
140.902 Service Needs (Recodified)
140.903 Definitions (Recodified)
140.904 Times and Staff Levels (Repealed)
140.905 Statewide Rates (Repealed)
140.906 Reconsiderations (Recodified)
140.907 Midnight Census Report (Recodified)
140.908 Times and Staff Levels (Recodified)
140.909 Statewide Rates (Recodified)

DEPARTMENT OF HEALTHCARE AND FAMILY SERVICES

NOTICE OF PROPOSED AMENDMENTS

140.910 Referrals (Recodified)
140.911 Basic Rehabilitation Aide Training Program (Recodified)
140.912 Interim Nursing Rates (Recodified)

SUBPART G: MATERNAL AND CHILD HEALTH PROGRAM

Section
140.920 General Description
140.922 Covered Services
140.924 Maternal and Child Health Provider Participation Requirements
140.926 Client Eligibility (Repealed)
140.928 Client Enrollment and Program Components (Repealed)
140.930 Reimbursement
140.932 Payment Authorization for Referrals (Repealed)

SUBPART H: ILLINOIS COMPETITIVE ACCESS AND REIMBURSEMENT EQUITY (ICARE) PROGRAM

Section
140.940 Illinois Competitive Access and Reimbursement Equity (ICARE) Program (Recodified)
140.942 Definition of Terms (Recodified)
140.944 Notification of Negotiations (Recodified)
140.946 Hospital Participation in ICARE Program Negotiations (Recodified)
140.948 Negotiation Procedures (Recodified)
140.950 Factors Considered in Awarding ICARE Contracts (Recodified)
140.952 Closing an ICARE Area (Recodified)
140.954 Administrative Review (Recodified)
140.956 Payments to Contracting Hospitals (Recodified)
140.958 Admitting and Clinical Privileges (Recodified)
140.960 Inpatient Hospital Care or Services by Non-Contracting Hospitals Eligible for Payment (Recodified)
140.962 Payment to Hospitals for Inpatient Services or Care not Provided under the ICARE Program (Recodified)
140.964 Contract Monitoring (Recodified)
140.966 Transfer of Recipients (Recodified)
140.968 Validity of Contracts (Recodified)
140.970 Termination of ICARE Contracts (Recodified)
140.972 Hospital Services Procurement Advisory Board (Recodified)

DEPARTMENT OF HEALTHCARE AND FAMILY SERVICES

NOTICE OF PROPOSED AMENDMENTS

140.980 Elimination Of Aid To The Medically Indigent (AMI) Program (Emergency Expired)
140.982 Elimination Of Hospital Services For Persons Age Eighteen (18) And Older And Persons Married And Living With Spouse, Regardless Of Age (Emergency Expired)

SUBPART I: PRIMARY CARE CASE MANAGEMENT PROGRAM

Section
140.990 Primary Care Case Management Program
140.991 Primary Care Provider Participation Requirements
140.992 Populations Eligible to Participate in the Primary Care Case Management Program
140.993 Care Management Fees
140.994 Panel Size and Affiliated Providers
140.995 Mandatory Enrollment
140.996 Access to Health Care Services
140.997 Payment for Services

SUBPART J: ALTERNATE PAYEE PARTICIPATION

Section
140.1001 Registration Conditions for Alternate Payees
140.1002 Participation Requirements for Alternate Payees
140.1003 Recovery of Money for Alternate Payees
140.1004 Conditional Registration for Alternate Payees
140.1005 Revocation of an Alternate Payee

SUBPART K: MANDATORY MCO ENROLLMENT

Section
140.1010 Mandatory Enrollment in MCOs

SUBPART L: UNAUTHORIZED USE OF MEDICAL ASSISTANCE

Section
140.1300 Definitions
140.1310 Recovery of Money
140.1320 Penalties

DEPARTMENT OF HEALTHCARE AND FAMILY SERVICES

NOTICE OF PROPOSED AMENDMENTS

140.1330 Enforcement

140.TABLE A	Criteria for Non-Emergency Ambulance Transportation
140.TABLE B	Geographic Areas
140.TABLE C	Capital Cost Areas
140.TABLE D	Schedule of Dental Procedures
140.TABLE E	Time Limits for Processing of Prior Approval Requests
140.TABLE F	Podiatry Service Schedule
140.TABLE G	Travel Distance Standards
140.TABLE H	Areas of Major Life Activity
140.TABLE I	Staff Time and Allocation for Training Programs (Recodified)
140.TABLE J	Rate Regions
140.TABLE K	Services Qualifying for 10% Add-On (Repealed)
140.TABLE L	Services Qualifying for 10% Add-On to Surgical Incentive Add-On (Repealed)
140.TABLE M	Enhanced Rates for Maternal and Child Health Provider Services (Repealed)
140.TABLE N	Program Approval for Specified Behavioral Health Services
140.TABLE O	Criteria for Participation as a Behavioral Health Clinic

AUTHORITY: Implementing and authorized by Articles III, IV, V and VI and Section 12-13 of the Illinois Public Aid Code [305 ILCS 5/Arts. III, IV, V and VI and 12-13].

SOURCE: Adopted at 3 Ill. Reg. 24, p. 166, effective June 10, 1979; rule repealed and new rule adopted at 6 Ill. Reg. 8374, effective July 6, 1982; emergency amendment at 6 Ill. Reg. 8508, effective July 6, 1982, for a maximum of 150 days; amended at 7 Ill. Reg. 681, effective December 30, 1982; amended at 7 Ill. Reg. 7956, effective July 1, 1983; amended at 7 Ill. Reg. 8308, effective July 1, 1983; amended at 7 Ill. Reg. 8271, effective July 5, 1983; emergency amendment at 7 Ill. Reg. 8354, effective July 5, 1983, for a maximum of 150 days; amended at 7 Ill. Reg. 8540, effective July 15, 1983; amended at 7 Ill. Reg. 9382, effective July 22, 1983; amended at 7 Ill. Reg. 12868, effective September 20, 1983; peremptory amendment at 7 Ill. Reg. 15047, effective October 31, 1983; amended at 7 Ill. Reg. 17358, effective December 21, 1983; amended at 8 Ill. Reg. 254, effective December 21, 1983; emergency amendment at 8 Ill. Reg. 580, effective January 1, 1984, for a maximum of 150 days; codified at 8 Ill. Reg. 2483; amended at 8 Ill. Reg. 3012, effective February 22, 1984; amended at 8 Ill. Reg. 5262, effective April 9, 1984; amended at 8 Ill. Reg. 6785, effective April 27, 1984; amended at 8 Ill. Reg. 6983, effective May 9, 1984; amended at 8 Ill. Reg. 7258, effective May 16, 1984; emergency amendment at 8 Ill. Reg. 7910, effective May 22, 1984, for a maximum of 150 days; amended at 8 Ill. Reg. 7910, effective June 1, 1984; amended at 8 Ill. Reg. 10032, effective June 18, 1984; emergency amendment at 8 Ill. Reg. 10062, effective June 20, 1984, for a maximum of 150 days;

amended at 8 Ill. Reg. 13343, effective July 17, 1984; amended at 8 Ill. Reg. 13779, effective July 24, 1984; Sections 140.72 and 140.73 recodified to 89 Ill. Adm. Code 141 at 8 Ill. Reg. 16354; amended (by adding sections being codified with no substantive change) at 8 Ill. Reg. 17899; peremptory amendment at 8 Ill. Reg. 18151, effective September 18, 1984; amended at 8 Ill. Reg. 21629, effective October 19, 1984; peremptory amendment at 8 Ill. Reg. 21677, effective October 24, 1984; amended at 8 Ill. Reg. 22097, effective October 24, 1984; peremptory amendment at 8 Ill. Reg. 22155, effective October 29, 1984; amended at 8 Ill. Reg. 23218, effective November 20, 1984; emergency amendment at 8 Ill. Reg. 23721, effective November 21, 1984, for a maximum of 150 days; amended at 8 Ill. Reg. 25067, effective December 19, 1984; emergency amendment at 9 Ill. Reg. 407, effective January 1, 1985, for a maximum of 150 days; amended at 9 Ill. Reg. 2697, effective February 22, 1985; amended at 9 Ill. Reg. 6235, effective April 19, 1985; amended at 9 Ill. Reg. 8677, effective May 28, 1985; amended at 9 Ill. Reg. 9564, effective June 5, 1985; amended at 9 Ill. Reg. 10025, effective June 26, 1985; emergency amendment at 9 Ill. Reg. 11403, effective June 27, 1985, for a maximum of 150 days; amended at 9 Ill. Reg. 11357, effective June 28, 1985; amended at 9 Ill. Reg. 12000, effective July 24, 1985; amended at 9 Ill. Reg. 12306, effective August 5, 1985; amended at 9 Ill. Reg. 13998, effective September 3, 1985; amended at 9 Ill. Reg. 14684, effective September 13, 1985; amended at 9 Ill. Reg. 15503, effective October 4, 1985; amended at 9 Ill. Reg. 16312, effective October 11, 1985; amended at 9 Ill. Reg. 19138, effective December 2, 1985; amended at 9 Ill. Reg. 19737, effective December 9, 1985; amended at 10 Ill. Reg. 238, effective December 27, 1985; emergency amendment at 10 Ill. Reg. 798, effective January 1, 1986, for a maximum of 150 days; amended at 10 Ill. Reg. 672, effective January 6, 1986; amended at 10 Ill. Reg. 1206, effective January 13, 1986; amended at 10 Ill. Reg. 3041, effective January 24, 1986; amended at 10 Ill. Reg. 6981, effective April 16, 1986; amended at 10 Ill. Reg. 7825, effective April 30, 1986; amended at 10 Ill. Reg. 8128, effective May 7, 1986; emergency amendment at 10 Ill. Reg. 8912, effective May 13, 1986, for a maximum of 150 days; amended at 10 Ill. Reg. 11440, effective June 20, 1986; amended at 10 Ill. Reg. 14714, effective August 27, 1986; amended at 10 Ill. Reg. 15211, effective September 12, 1986; emergency amendment at 10 Ill. Reg. 16729, effective September 18, 1986, for a maximum of 150 days; amended at 10 Ill. Reg. 18808, effective October 24, 1986; amended at 10 Ill. Reg. 19742, effective November 12, 1986; amended at 10 Ill. Reg. 21784, effective December 15, 1986; amended at 11 Ill. Reg. 698, effective December 19, 1986; amended at 11 Ill. Reg. 1418, effective December 31, 1986; amended at 11 Ill. Reg. 2323, effective January 16, 1987; amended at 11 Ill. Reg. 4002, effective February 25, 1987; Section 140.71 recodified to 89 Ill. Adm. Code 141 at 11 Ill. Reg. 4302; amended at 11 Ill. Reg. 4303, effective March 6, 1987; amended at 11 Ill. Reg. 7664, effective April 15, 1987; emergency amendment at 11 Ill. Reg. 9342, effective April 20, 1987, for a maximum of 150 days; amended at 11 Ill. Reg. 9169, effective April 28, 1987; amended at 11 Ill. Reg. 10903, effective June 1, 1987; amended at 11 Ill. Reg. 11528, effective June 22, 1987; amended at 11 Ill. Reg. 12011, effective June 30, 1987; amended at 11 Ill. Reg. 12290, effective

July 6, 1987; amended at 11 Ill. Reg. 14048, effective August 14, 1987; amended at 11 Ill. Reg. 14771, effective August 25, 1987; amended at 11 Ill. Reg. 16758, effective September 28, 1987; amended at 11 Ill. Reg. 17295, effective September 30, 1987; amended at 11 Ill. Reg. 18696, effective October 27, 1987; amended at 11 Ill. Reg. 20909, effective December 14, 1987; amended at 12 Ill. Reg. 916, effective January 1, 1988; emergency amendment at 12 Ill. Reg. 1960, effective January 1, 1988, for a maximum of 150 days; amended at 12 Ill. Reg. 5427, effective March 15, 1988; amended at 12 Ill. Reg. 6246, effective March 16, 1988; amended at 12 Ill. Reg. 6728, effective March 22, 1988; Sections 140.900 thru 140.912 and 140.Table H and 140.Table I recodified to 89 Ill. Adm. Code 147.5 thru 147.205 and 147.Table A and 147.Table B at 12 Ill. Reg. 6956; amended at 12 Ill. Reg. 6927, effective April 5, 1988; Sections 140.940 thru 140.972 recodified to 89 Ill. Adm. Code 149.5 thru 149.325 at 12 Ill. Reg. 7401; amended at 12 Ill. Reg. 7695, effective April 21, 1988; amended at 12 Ill. Reg. 10497, effective June 3, 1988; amended at 12 Ill. Reg. 10717, effective June 14, 1988; emergency amendment at 12 Ill. Reg. 11868, effective July 1, 1988, for a maximum of 150 days; amended at 12 Ill. Reg. 12509, effective July 15, 1988; amended at 12 Ill. Reg. 14271, effective August 29, 1988; emergency amendment at 12 Ill. Reg. 16921, effective September 28, 1988, for a maximum of 150 days; amended at 12 Ill. Reg. 16738, effective October 5, 1988; amended at 12 Ill. Reg. 17879, effective October 24, 1988; amended at 12 Ill. Reg. 18198, effective November 4, 1988; amended at 12 Ill. Reg. 19396, effective November 6, 1988; amended at 12 Ill. Reg. 19734, effective November 15, 1988; amended at 13 Ill. Reg. 125, effective January 1, 1989; amended at 13 Ill. Reg. 2475, effective February 14, 1989; amended at 13 Ill. Reg. 3069, effective February 28, 1989; amended at 13 Ill. Reg. 3351, effective March 6, 1989; amended at 13 Ill. Reg. 3917, effective March 17, 1989; amended at 13 Ill. Reg. 5115, effective April 3, 1989; amended at 13 Ill. Reg. 5718, effective April 10, 1989; amended at 13 Ill. Reg. 7025, effective April 24, 1989; Sections 140.850 thru 140.896 recodified to 89 Ill. Adm. Code 146.5 thru 146.225 at 13 Ill. Reg. 7040; amended at 13 Ill. Reg. 7786, effective May 20, 1989; Sections 140.94 thru 140.398 recodified to 89 Ill. Adm. Code 148.10 thru 148.390 at 13 Ill. Reg. 9572; emergency amendment at 13 Ill. Reg. 10977, effective July 1, 1989, for a maximum of 150 days; emergency expired November 28, 1989; amended at 13 Ill. Reg. 11516, effective July 3, 1989; amended at 13 Ill. Reg. 12119, effective July 7, 1989; Section 140.110 recodified to 89 Ill. Adm. Code 148.120 at 13 Ill. Reg. 12118; amended at 13 Ill. Reg. 12562, effective July 17, 1989; amended at 13 Ill. Reg. 14391, effective August 31, 1989; emergency amendment at 13 Ill. Reg. 15473, effective September 12, 1989, for a maximum of 150 days; amended at 13 Ill. Reg. 16992, effective October 16, 1989; amended at 14 Ill. Reg. 190, effective December 21, 1989; amended at 14 Ill. Reg. 2564, effective February 9, 1990; emergency amendment at 14 Ill. Reg. 3241, effective February 14, 1990, for a maximum of 150 days; emergency expired July 14, 1990; amended at 14 Ill. Reg. 4543, effective March 12, 1990; emergency amendment at 14 Ill. Reg. 4577, effective March 6, 1990, for a maximum of 150 days; emergency expired August 3, 1990; emergency amendment at 14 Ill. Reg. 5575, effective April 1, 1990, for a maximum of 150

days; emergency expired August 29, 1990; emergency amendment at 14 Ill. Reg. 5865, effective April 3, 1990, for a maximum of 150 days; amended at 14 Ill. Reg. 7141, effective April 27, 1990; emergency amendment at 14 Ill. Reg. 7249, effective April 27, 1990, for a maximum of 150 days; amended at 14 Ill. Reg. 10062, effective June 12, 1990; amended at 14 Ill. Reg. 10409, effective June 19, 1990; emergency amendment at 14 Ill. Reg. 12082, effective July 5, 1990, for a maximum of 150 days; amended at 14 Ill. Reg. 13262, effective August 6, 1990; emergency amendment at 14 Ill. Reg. 14184, effective August 16, 1990, for a maximum of 150 days; emergency amendment at 14 Ill. Reg. 14570, effective August 22, 1990, for a maximum of 150 days; amended at 14 Ill. Reg. 14826, effective August 31, 1990; amended at 14 Ill. Reg. 15366, effective September 12, 1990; amended at 14 Ill. Reg. 15981, effective September 21, 1990; amended at 14 Ill. Reg. 17279, effective October 12, 1990; amended at 14 Ill. Reg. 18057, effective October 22, 1990; amended at 14 Ill. Reg. 18508, effective October 30, 1990; amended at 14 Ill. Reg. 18813, effective November 6, 1990; Notice of Corrections to Adopted Amendment at 15 Ill. Reg. 1174; amended at 14 Ill. Reg. 20478, effective December 7, 1990; amended at 14 Ill. Reg. 20729, effective December 12, 1990; amended at 15 Ill. Reg. 298, effective December 28, 1990; emergency amendment at 15 Ill. Reg. 592, effective January 1, 1991, for a maximum of 150 days; amended at 15 Ill. Reg. 1051, effective January 18, 1991; amended at 15 Ill. Reg. 6220, effective April 18, 1991; amended at 15 Ill. Reg. 6534, effective April 30, 1991; amended at 15 Ill. Reg. 8264, effective May 23, 1991; amended at 15 Ill. Reg. 8972, effective June 17, 1991; amended at 15 Ill. Reg. 10114, effective June 21, 1991; amended at 15 Ill. Reg. 10468, effective July 1, 1991; amended at 15 Ill. Reg. 11176, effective August 1, 1991; emergency amendment at 15 Ill. Reg. 11515, effective July 25, 1991, for a maximum of 150 days; emergency expired December 22, 1991; emergency amendment at 15 Ill. Reg. 12919, effective August 15, 1991, for a maximum of 150 days; emergency expired January 12, 1992; emergency amendment at 15 Ill. Reg. 16366, effective October 22, 1991, for a maximum of 150 days; amended at 15 Ill. Reg. 17318, effective November 18, 1991; amended at 15 Ill. Reg. 17733, effective November 22, 1991; emergency amendment at 16 Ill. Reg. 300, effective December 20, 1991, for a maximum of 150 days; amended at 16 Ill. Reg. 174, effective December 24, 1991; amended at 16 Ill. Reg. 1877, effective January 24, 1992; amended at 16 Ill. Reg. 3552, effective February 28, 1992; amended at 16 Ill. Reg. 4006, effective March 6, 1992; amended at 16 Ill. Reg. 6408, effective March 20, 1992; expedited correction at 16 Ill. Reg. 11348, effective March 20, 1992; amended at 16 Ill. Reg. 6849, effective April 7, 1992; amended at 16 Ill. Reg. 7017, effective April 17, 1992; amended at 16 Ill. Reg. 10050, effective June 5, 1992; amended at 16 Ill. Reg. 11174, effective June 26, 1992; emergency amendment at 16 Ill. Reg. 11947, effective July 10, 1992, for a maximum of 150 days; amended at 16 Ill. Reg. 12186, effective July 24, 1992; emergency amendment at 16 Ill. Reg. 13337, effective August 14, 1992, for a maximum of 150 days; emergency amendment at 16 Ill. Reg. 15109, effective September 21, 1992, for a maximum of 150 days; amended at 16 Ill. Reg. 15561, effective September 30, 1992; amended at 16 Ill. Reg. 17302, effective November 2, 1992; emergency amendment at 16

Ill. Reg. 18097, effective November 17, 1992, for a maximum of 150 days; amended at 16 Ill. Reg. 19146, effective December 1, 1992; expedited correction at 17 Ill. Reg. 7078, effective December 1, 1992; amended at 16 Ill. Reg. 19879, effective December 7, 1992; amended at 17 Ill. Reg. 837, effective January 11, 1993; amended at 17 Ill. Reg. 1112, effective January 15, 1993; amended at 17 Ill. Reg. 2290, effective February 15, 1993; amended at 17 Ill. Reg. 2951, effective February 17, 1993; amended at 17 Ill. Reg. 3421, effective February 19, 1993; amended at 17 Ill. Reg. 6196, effective April 5, 1993; amended at 17 Ill. Reg. 6839, effective April 21, 1993; amended at 17 Ill. Reg. 7004, effective May 17, 1993; emergency amendment at 17 Ill. Reg. 11201, effective July 1, 1993, for a maximum of 150 days; emergency amendment at 17 Ill. Reg. 15162, effective September 2, 1993, for a maximum of 150 days; emergency amendment suspended at 17 Ill. Reg. 18902, effective October 12, 1993; emergency amendment at 17 Ill. Reg. 18152, effective October 1, 1993, for a maximum of 150 days; amended at 17 Ill. Reg. 18571, effective October 8, 1993; emergency amendment at 17 Ill. Reg. 18611, effective October 1, 1993, for a maximum of 150 days; amended at 17 Ill. Reg. 20999, effective November 24, 1993; emergency amendment repealed at 17 Ill. Reg. 22583, effective December 20, 1993; amended at 18 Ill. Reg. 3620, effective February 28, 1994; amended at 18 Ill. Reg. 4250, effective March 4, 1994; amended at 18 Ill. Reg. 5951, effective April 1, 1994; emergency amendment at 18 Ill. Reg. 10922, effective July 1, 1994, for a maximum of 150 days; emergency amendment suspended at 18 Ill. Reg. 17286, effective November 15, 1994; emergency amendment repealed at 19 Ill. Reg. 5839, effective April 4, 1995; amended at 18 Ill. Reg. 11244, effective July 1, 1994; amended at 18 Ill. Reg. 14126, effective August 29, 1994; amended at 18 Ill. Reg. 16675, effective November 1, 1994; amended at 18 Ill. Reg. 18059, effective December 19, 1994; amended at 19 Ill. Reg. 1082, effective January 20, 1995; amended at 19 Ill. Reg. 2933, effective March 1, 1995; emergency amendment at 19 Ill. Reg. 3529, effective March 1, 1995, for a maximum of 150 days; amended at 19 Ill. Reg. 5663, effective April 1, 1995; amended at 19 Ill. Reg. 7919, effective June 5, 1995; emergency amendment at 19 Ill. Reg. 8455, effective June 9, 1995, for a maximum of 150 days; emergency amendment at 19 Ill. Reg. 9297, effective July 1, 1995, for a maximum of 150 days; emergency amendment at 19 Ill. Reg. 10252, effective July 1, 1995, for a maximum of 150 days; amended at 19 Ill. Reg. 13019, effective September 5, 1995; amended at 19 Ill. Reg. 14440, effective September 29, 1995; emergency amendment at 19 Ill. Reg. 14833, effective October 6, 1995, for a maximum of 150 days; amended at 19 Ill. Reg. 15441, effective October 26, 1995; amended at 19 Ill. Reg. 15692, effective November 6, 1995; amended at 19 Ill. Reg. 16677, effective November 28, 1995; amended at 20 Ill. Reg. 1210, effective December 29, 1995; amended at 20 Ill. Reg. 4345, effective March 4, 1996; amended at 20 Ill. Reg. 5858, effective April 5, 1996; amended at 20 Ill. Reg. 6929, effective May 6, 1996; amended at 20 Ill. Reg. 7922, effective May 31, 1996; amended at 20 Ill. Reg. 9081, effective June 28, 1996; emergency amendment at 20 Ill. Reg. 9312, effective July 1, 1996, for a maximum of 150 days; amended at 20 Ill. Reg. 11332, effective August 1, 1996; amended at 20 Ill. Reg. 14845, effective October 31, 1996; emergency

amendment at 21 Ill. Reg. 705, effective December 31, 1996, for a maximum of 150 days; emergency amendment at 21 Ill. Reg. 3734, effective March 5, 1997, for a maximum of 150 days; amended at 21 Ill. Reg. 4777, effective April 2, 1997; amended at 21 Ill. Reg. 6899, effective May 23, 1997; amended at 21 Ill. Reg. 9763, effective July 15, 1997; amended at 21 Ill. Reg. 11569, effective August 1, 1997; emergency amendment at 21 Ill. Reg. 13857, effective October 1, 1997, for a maximum of 150 days; amended at 22 Ill. Reg. 1416, effective December 29, 1997; amended at 22 Ill. Reg. 4412, effective February 27, 1998; amended at 22 Ill. Reg. 7024, effective April 1, 1998; amended at 22 Ill. Reg. 10606, effective June 1, 1998; emergency amendment at 22 Ill. Reg. 13117, effective July 1, 1998, for a maximum of 150 days; amended at 22 Ill. Reg. 16302, effective August 28, 1998; amended at 22 Ill. Reg. 18979, effective September 30, 1998; amended at 22 Ill. Reg. 19898, effective October 30, 1998; emergency amendment at 22 Ill. Reg. 22108, effective December 1, 1998, for a maximum of 150 days; emergency expired April 29, 1999; amended at 23 Ill. Reg. 5796, effective April 30, 1999; amended at 23 Ill. Reg. 7122, effective June 1, 1999; emergency amendment at 23 Ill. Reg. 8236, effective July 1, 1999, for a maximum of 150 days; amended at 23 Ill. Reg. 9874, effective August 3, 1999; amended at 23 Ill. Reg. 12697, effective October 1, 1999; amended at 23 Ill. Reg. 13646, effective November 1, 1999; amended at 23 Ill. Reg. 14567, effective December 1, 1999; amended at 24 Ill. Reg. 661, effective January 3, 2000; amended at 24 Ill. Reg. 10277, effective July 1, 2000; emergency amendment at 24 Ill. Reg. 10436, effective July 1, 2000, for a maximum of 150 days; amended at 24 Ill. Reg. 15086, effective October 1, 2000; amended at 24 Ill. Reg. 18320, effective December 1, 2000; emergency amendment at 24 Ill. Reg. 19344, effective December 15, 2000, for a maximum of 150 days; amended at 25 Ill. Reg. 3897, effective March 1, 2001; amended at 25 Ill. Reg. 6665, effective May 11, 2001; amended at 25 Ill. Reg. 8793, effective July 1, 2001; emergency amendment at 25 Ill. Reg. 8850, effective July 1, 2001, for a maximum of 150 days; amended at 25 Ill. Reg. 11880, effective September 1, 2001; amended at 25 Ill. Reg. 12820, effective October 8, 2001; amended at 25 Ill. Reg. 14957, effective November 1, 2001; emergency amendment at 25 Ill. Reg. 16127, effective November 28, 2001, for a maximum of 150 days; emergency amendment at 25 Ill. Reg. 16292, effective December 3, 2001, for a maximum of 150 days; emergency amendment at 26 Ill. Reg. 514, effective January 1, 2002, for a maximum of 150 days; amended at 26 Ill. Reg. 663, effective January 7, 2002; amended at 26 Ill. Reg. 4781, effective March 15, 2002; emergency amendment at 26 Ill. Reg. 5984, effective April 15, 2002, for a maximum of 150 days; amended at 26 Ill. Reg. 7285, effective April 29, 2002; emergency amendment at 26 Ill. Reg. 8594, effective June 1, 2002, for a maximum of 150 days; emergency amendment at 26 Ill. Reg. 11259, effective July 1, 2002, for a maximum of 150 days; emergency amendment at 26 Ill. Reg. 12461, effective July 29, 2002, for a maximum of 150 days; emergency amendment repealed at 26 Ill. Reg. 16593, effective October 22, 2002; emergency amendment at 26 Ill. Reg. 12772, effective August 12, 2002, for a maximum of 150 days; amended at 26 Ill. Reg. 13641, effective September 3, 2002; amended at 26 Ill. Reg. 14789, effective September 26, 2002; emergency amendment at 26 Ill.

Reg. 15076, effective October 1, 2002, for a maximum of 150 days; amended at 26 Ill. Reg. 16303, effective October 25, 2002; amended at 26 Ill. Reg. 17751, effective November 27, 2002; amended at 27 Ill. Reg. 768, effective January 3, 2003; amended at 27 Ill. Reg. 3041, effective February 10, 2003; amended at 27 Ill. Reg. 4364, effective February 24, 2003; amended at 27 Ill. Reg. 7823, effective May 1, 2003; amended at 27 Ill. Reg. 9157, effective June 2, 2003; emergency amendment at 27 Ill. Reg. 10813, effective July 1, 2003, for a maximum of 150 days; amended at 27 Ill. Reg. 13784, effective August 1, 2003; amended at 27 Ill. Reg. 14799, effective September 5, 2003; emergency amendment at 27 Ill. Reg. 15584, effective September 20, 2003, for a maximum of 150 days; emergency amendment at 27 Ill. Reg. 16161, effective October 1, 2003, for a maximum of 150 days; amended at 27 Ill. Reg. 18629, effective November 26, 2003; amended at 28 Ill. Reg. 2744, effective February 1, 2004; amended at 28 Ill. Reg. 4958, effective March 3, 2004; emergency amendment at 28 Ill. Reg. 6622, effective April 19, 2004, for a maximum of 150 days; amended at 28 Ill. Reg. 7081, effective May 3, 2004; emergency amendment at 28 Ill. Reg. 8108, effective June 1, 2004, for a maximum of 150 days; amended at 28 Ill. Reg. 9640, effective July 1, 2004; emergency amendment at 28 Ill. Reg. 10135, effective July 1, 2004, for a maximum of 150 days; amended at 28 Ill. Reg. 11161, effective August 1, 2004; emergency amendment at 28 Ill. Reg. 12198, effective August 11, 2004, for a maximum of 150 days; amended at 28 Ill. Reg. 13775, effective October 1, 2004; amended at 28 Ill. Reg. 14804, effective October 27, 2004; amended at 28 Ill. Reg. 15513, effective November 24, 2004; amended at 29 Ill. Reg. 831, effective January 1, 2005; amended at 29 Ill. Reg. 6945, effective May 1, 2005; emergency amendment at 29 Ill. Reg. 8509, effective June 1, 2005, for a maximum of 150 days; emergency amendment at 29 Ill. Reg. 12534, effective August 1, 2005, for a maximum of 150 days; amended at 29 Ill. Reg. 14957, effective September 30, 2005; emergency amendment at 29 Ill. Reg. 15064, effective October 1, 2005, for a maximum of 150 days; emergency amendment repealed by emergency rulemaking at 29 Ill. Reg. 15985, effective October 5, 2005, for the remainder of the 150 days; emergency amendment at 29 Ill. Reg. 15610, effective October 1, 2005, for a maximum of 150 days; emergency amendment at 29 Ill. Reg. 16515, effective October 5, 2005, for a maximum of 150 days; amended at 30 Ill. Reg. 349, effective December 28, 2005; emergency amendment at 30 Ill. Reg. 573, effective January 1, 2006, for a maximum of 150 days; amended at 30 Ill. Reg. 796, effective January 1, 2006; amended at 30 Ill. Reg. 2802, effective February 24, 2006; amended at 30 Ill. Reg. 10370, effective May 26, 2006; emergency amendment at 30 Ill. Reg. 12376, effective July 1, 2006, for a maximum of 150 days; emergency amendment at 30 Ill. Reg. 13909, effective August 2, 2006, for a maximum of 150 days; amended at 30 Ill. Reg. 14280, effective August 18, 2006; expedited correction at 31 Ill. Reg. 1745, effective August 18, 2006; emergency amendment at 30 Ill. Reg. 17970, effective November 1, 2006, for a maximum of 150 days; amended at 30 Ill. Reg. 18648, effective November 27, 2006; emergency amendment at 30 Ill. Reg. 19400, effective December 1, 2006, for a maximum of 150 days; amended at 31 Ill. Reg. 388, effective December 29, 2006; emergency amendment at 31 Ill. Reg. 1580, effective

January 1, 2007, for a maximum of 150 days; amended at 31 Ill. Reg. 2413, effective January 19, 2007; amended at 31 Ill. Reg. 5561, effective March 30, 2007; amended at 31 Ill. Reg. 6930, effective April 29, 2007; amended at 31 Ill. Reg. 8485, effective May 30, 2007; emergency amendment at 31 Ill. Reg. 10115, effective June 30, 2007, for a maximum of 150 days; amended at 31 Ill. Reg. 14749, effective October 22, 2007; emergency amendment at 32 Ill. Reg. 383, effective January 1, 2008, for a maximum of 150 days; peremptory amendment at 32 Ill. Reg. 6743, effective April 1, 2008; peremptory amendment suspended at 32 Ill. Reg. 8449, effective May 21, 2008; suspension withdrawn by the Joint Committee on Administrative Rules at 32 Ill. Reg. 18323, effective November 12, 2008; peremptory amendment repealed by emergency rulemaking at 32 Ill. Reg. 18422, effective November 12, 2008, for a maximum of 150 days; emergency expired April 10, 2009; peremptory amendment repealed at 33 Ill. Reg. 6667, effective April 29, 2009; amended at 32 Ill. Reg. 7727, effective May 5, 2008; emergency amendment at 32 Ill. Reg. 10480, effective July 1, 2008, for a maximum of 150 days; emergency expired November 27, 2008; amended at 32 Ill. Reg. 17133, effective October 15, 2008; amended at 33 Ill. Reg. 209, effective December 29, 2008; amended at 33 Ill. Reg. 9048, effective June 15, 2009; emergency amendment at 33 Ill. Reg. 10800, effective June 30, 2009, for a maximum of 150 days; amended at 33 Ill. Reg. 11287, effective July 14, 2009; amended at 33 Ill. Reg. 11938, effective August 17, 2009; amended at 33 Ill. Reg. 12227, effective October 1, 2009; emergency amendment at 33 Ill. Reg. 14324, effective October 1, 2009, for a maximum of 150 days; emergency expired February 27, 2010; amended at 33 Ill. Reg. 16573, effective November 16, 2009; amended at 34 Ill. Reg. 516, effective January 1, 2010; amended at 34 Ill. Reg. 903, effective January 29, 2010; amended at 34 Ill. Reg. 3761, effective March 14, 2010; amended at 34 Ill. Reg. 5215, effective March 25, 2010; amended at 34 Ill. Reg. 19517, effective December 6, 2010; amended at 35 Ill. Reg. 394, effective December 27, 2010; amended at 35 Ill. Reg. 7648, effective May 1, 2011; amended at 35 Ill. Reg. 7962, effective May 1, 2011; amended at 35 Ill. Reg. 10000, effective June 15, 2011; amended at 35 Ill. Reg. 12909, effective July 25, 2011; amended at 36 Ill. Reg. 2271, effective February 1, 2012; amended at 36 Ill. Reg. 7010, effective April 27, 2012; amended at 36 Ill. Reg. 7545, effective May 7, 2012; amended at 36 Ill. Reg. 9113, effective June 11, 2012; emergency amendment at 36 Ill. Reg. 11329, effective July 1, 2012 through June 30, 2013; emergency amendment to Section 140.442(e)(4) suspended at 36 Ill. Reg. 13736, effective August 15, 2012; suspension withdrawn from Section 140.442(e)(4) at 36 Ill. Reg. 14529, September 11, 2012; emergency amendment in response to Joint Committee on Administrative Rules action on Section 140.442(e)(4) at 36 Ill. Reg. 14820, effective September 21, 2012 through June 30, 2013; emergency amendment to Section 140.491 suspended at 36 Ill. Reg. 13738, effective August 15, 2012; suspension withdrawn by the Joint Committee on Administrative Rules from Section 140.491 at 37 Ill. Reg. 890, January 8, 2013; emergency amendment in response to Joint Committee on Administrative Rules action on Section 140.491 at 37 Ill. Reg. 1330, effective January 15, 2013 through June 30, 2013; amended at 36 Ill. Reg. 15361, effective October 15, 2012; emergency amendment at 37 Ill. Reg. 253,

effective January 1, 2013 through June 30, 2013; emergency amendment at 37 Ill. Reg. 846, effective January 9, 2013 through June 30, 2013; emergency amendment at 37 Ill. Reg. 1774, effective January 28, 2013 through June 30, 2013; emergency amendment at 37 Ill. Reg. 2348, effective February 1, 2013 through June 30, 2013; amended at 37 Ill. Reg. 3831, effective March 13, 2013; emergency amendment at 37 Ill. Reg. 5058, effective April 1, 2013 through June 30, 2013; emergency amendment at 37 Ill. Reg. 5170, effective April 8, 2013 through June 30, 2013; amended at 37 Ill. Reg. 6196, effective April 29, 2013; amended at 37 Ill. Reg. 7985, effective May 29, 2013; amended at 37 Ill. Reg. 10282, effective June 27, 2013; amended at 37 Ill. Reg. 12855, effective July 24, 2013; emergency amendment at 37 Ill. Reg. 14196, effective August 20, 2013, for a maximum of 150 days; amended at 37 Ill. Reg. 17584, effective October 23, 2013; amended at 37 Ill. Reg. 18275, effective November 4, 2013; amended at 37 Ill. Reg. 20339, effective December 9, 2013; amended at 38 Ill. Reg. 859, effective December 23, 2013; emergency amendment at 38 Ill. Reg. 1174, effective January 1, 2014, for a maximum of 150 days; amended at 38 Ill. Reg. 4330, effective January 29, 2014; amended at 38 Ill. Reg. 7156, effective March 13, 2014; amended at 38 Ill. Reg. 12141, effective May 30, 2014; amended at 38 Ill. Reg. 15081, effective July 2, 2014; emergency amendment at 38 Ill. Reg. 15673, effective July 7, 2014, for a maximum of 150 days; emergency amendment at 38 Ill. Reg. 18216, effective August 18, 2014, for a maximum of 150 days; amended at 38 Ill. Reg. 18462, effective August 19, 2014; amended at 38 Ill. Reg. 23623, effective December 2, 2014; amended at 39 Ill. Reg. 4394, effective March 11, 2015; emergency amendment at 39 Ill. Reg. 6903, effective May 1, 2015 through June 30, 2015; emergency amendment at 39 Ill. Reg. 8137, effective May 20, 2015, for a maximum of 150 days; emergency amendment at 39 Ill. Reg. 10427, effective July 10, 2015, for a maximum of 150 days; emergency expired December 6, 2015; amended at 39 Ill. Reg. 12825, effective September 4, 2015; amended at 39 Ill. Reg. 13380, effective September 25, 2015; amended at 39 Ill. Reg. 14138, effective October 14, 2015; emergency amendment at 40 Ill. Reg. 13677, effective September 16, 2016, for a maximum of 150 days; emergency expired February 12, 2017; amended at 41 Ill. Reg. 999, effective January 19, 2017; amended at 41 Ill. Reg. 3296, effective March 8, 2017; amended at 41 Ill. Reg. 7526, effective June 15, 2017; amended at 41 Ill. Reg. 10950, effective August 9, 2017; amended at 42 Ill. Reg. 4829, effective March 1, 2018; amended at 42 Ill. Reg. 12986, effective June 25, 2018; emergency amendment at 42 Ill. Reg. 13688, effective July 2, 2018, for a maximum of 150 days; emergency amendment to emergency rule at 42 Ill. Reg. 16265, effective August 13, 2018, for the remainder of the 150 days; amended at 42 Ill. Reg. 14383, effective July 23, 2018; amended at 42 Ill. Reg. 20059, effective October 26, 2018; amended at 43 Ill. Reg. _____, effective _____.

SUBPART D: PAYMENT FOR NON-INSTITUTIONAL SERVICES

Section 140.462 Covered Services in Clinics

DEPARTMENT OF HEALTHCARE AND FAMILY SERVICES

NOTICE OF PROPOSED AMENDMENTS

Payment shall be made to clinics for the following types of services when provided by, or under the direction of, a physician:

a) Hospital-Based Organized Clinics. Covered services are those described in 89 Ill. Adm. Code 148.

b) Encounter Rate Clinics

1) With respect to those encounter rate clinics that qualify as Maternal and Child Health providers, as described in Section 140.924, covered services are those described in Section 140.922.

2) With respect to all other encounter rate clinics, covered services are medical services that provide for the continuous health care needs of persons who elect to use this type of service, including dental services that will be billed as separate encounters for dates of service on or after January 1, 2011.

3) Group psychotherapy services must meet the guidelines set forth in Section 140.413(a)(4)(C).

c) Rural Health Clinics
Those core services for which the clinic or center may bill an encounter as described in 42 CFR 440.90 (2000) are as follows:

1) Physician's Services, including covered services of nurse practitioners, nurse midwives and physician-supervised physician assistants. Group psychotherapy services must meet the guidelines set forth in Section 140.413(a)(4)(C).

2) Group Psychotherapy Services – Payment may be made for up to two group sessions per week, with a maximum of one session per day. The following conditions must be met for group psychotherapy:

A) documentation maintained in the patient's medical record must indicate the person participating in the group session has been diagnosed with a mental illness as defined in the International Classification of Diseases 9th Revision, Clinical Modification (ICD-9-CM) or, upon implementation, International Classification

of Diseases, 10th Revision, Clinical Modification (ICD-10-CM), or the Diagnostic and Statistical Manual of Mental Disorders (DSM IV). The allowable diagnosis code ranges will be specified in the Handbook for Practitioners Rendering Medical Services;

B) beginning February 1, 2013, the entire group of psychotherapy services must be directly performed by one of the following practitioners:

i) a physician licensed to practice medicine in all its branches who has completed an approved general psychiatry residency program or is providing the service as a resident or attending physician at an approved or accredited residency program;

ii) an Advanced Practice Registered Nurse holding a current certification in Psychiatric and Mental Health Nursing as set forth in 68 Ill. Adm. Code 1305.Appendix A;

iii) Psychologist;

iv) Licensed Clinical Social Worker;

v) Licensed Clinical Professional Counselor; or

vi) Licensed Marriage and Family Therapist;

C) the group size does not exceed 12 patients, regardless of payment source;

D) the minimum duration of the group session is 45 minutes;

E) the group session is documented in the patient's medical record by the rendering practitioner, including the session's primary focus, level of patient participation, and begin and end times of each session;

F) the group treatment model, methods and subject content have been selected on evidence-based criteria for the target population of the

group and follows recognized practice guidelines for psychiatric services;

G) the group session is provided in accordance with a clear written description of goals, methods and referral criteria; and

H) group psychotherapy is not covered for recipients who are residents in a facility licensed under the Nursing Home Care Act [210 ILCS 45] or the Specialized Mental Health Rehabilitation Act [210 ILCS 48].

3) Other services for which a separate encounter may be billed include dentist and behavioral health services as defined in Section 140.463(a).

4) Medically-necessary services and supplies furnished by or under the direction of a physician or dentist within the scope of licensed practice that have been included in the cost report but neither fee-for-service nor encounter billings may be billed. Some examples of these services include:

A) medical case management;

B) laboratory services;

C) occupational therapy;

D) patient transportation;

E) pharmacy services;

F) physical therapy;

G) podiatric services;

H) speech and hearing services;

I) x-ray services;

J) health education;

K) nutrition services;

L) optometric services.

5) A rural health clinic (RHC) that adds behavioral health services or dental services on or after October 1, 2001, must notify the Department in writing. These services are to be billed as an encounter with a procedure code that appropriately identifies the service provided.

6) Any service that is no longer provided on or after October 1, 2001, or any new service added on or after October 1, 2001, must be communicated to the Department in writing prior to billing for the services.

7) Effective January 1, 2001, the Medicare, Medicaid and SCHIP Benefits Improvement and Protection Act (BIPA) precludes fee-for-service billings for any RHC services with the exception of services identified in subsections (c)(8) and (c)(9).

8) Effective July 1, 2012 through June 30, 2013, a physician or APRN~~APN~~ may submit fee-for-service billings for implantable contraceptive devices administered in an RHC. Reimbursement for the implantable contraceptive devices shall be made in accordance with the following:

A) To the extent that the implantable device was purchased under the 340B Drug Pricing Program, the device must be billed at the RHC's actual acquisition cost;

B) The RHC must be listed as the payee on the claim;

C) Reimbursement shall be made at the RHC 's actual acquisition cost or the rate on the Department's practitioner fee schedule, whichever is applicable;

D) This reimbursement shall be separate from any encounter payment the RHC may receive for implanting the device.

9) Effective July 1, 2013, an RHC may submit fee-for-service billings for Long Acting Reversible Contraceptives (LARCs). For dates of service

October 1, 2014 and after, an RHC may submit fee-for-service billing for non-surgical transcervical permanent contraceptive devices. Reimbursement for the implantable contraceptive device shall be made in accordance with the following:

A) To the extent that the LARCs or transcervical permanent contraceptive devices were purchased under the 340B Drug Pricing Program, the device must be billed at the RHC's actual acquisition cost;

B) Reimbursement shall be made at the RHC 's actual acquisition cost or the rate on the Department's practitioner fee schedule, whichever is applicable;

C) This reimbursement shall be separate from any encounter payment the RHC may receive for implanting the device.

10) Tobacco cessation counseling services may be billed as an encounter if furnished by a provider as defined in Section 140.413(a)(15) within the designated coverage limitations.

d) Federally Qualified Health Centers
Those core services for which the clinic or center may bill an encounter as described in 42 CFR 440.90 (2000) are as follows:

1) Physician's services, including covered services of nurse midwives, nurse practitioners and physician-supervised physician assistants. Group psychotherapy services must meet the guidelines set forth in Section 140.413(a)(4)(C).

2) Group Psychotherapy Services – Payment may be made for up to two group sessions per week, with a maximum of one session per day. The following conditions must be met for group psychotherapy:

A) documentation maintained in the patient's medical record must indicate the person participating in the group session has been diagnosed with a mental illness as defined in the International Classification of Diseases 9th Revision, Clinical Modification (ICD-9-CM) or, upon implementation, International Classification

of Diseases, 10th Revision, Clinical Modification (ICD-10-CM), or the Diagnostic and Statistical Manual of Mental Disorders (DSM IV). The allowable diagnosis code ranges will be specified in the Handbook for Practitioners Rendering Medical Services;

B) beginning February 1, 2013, the entire group of psychotherapy services must be directly performed by one of the following practitioners:

i) a physician licensed to practice medicine in all its branches who has completed an approved general psychiatry residency program or is providing the service as a resident or attending physician at an approved or accredited residency program;

ii) an Advanced Practice Nurse holding a current certification in Psychiatric and Mental Health Nursing as set forth in 68 Ill. Adm. Code 1305.Appendix A;

iii) Psychologist;

iv) Licensed Clinical Social Worker;

v) Licensed Clinical Professional Counselor; or

vi) Licensed Marriage and Family Therapist;

C) the group size does not exceed 12 patients, regardless of payment source;

D) the minimum duration of the group session is 45 minutes;

E) the group session is documented in the patient's medical record by the rendering practitioner, including the session's primary focus, level of patient participation, and begin and end times of each session;

F) the group treatment model, methods and subject content have been selected on evidence-based criteria for the target population of the

group and follows recognized practice guidelines for psychiatric services;

G) the group session is provided in accordance with a clear written description of goals, methods and referral criteria; and

H) group psychotherapy is not covered for recipients who are residents in a facility licensed under the Nursing Home Care Act [210 ILCS 45] or the Specialized Mental Health Rehabilitation Act [210 ILCS 48].

3) Other services for which separate encounters may be billed include:

A) dental services provided by a dentist or a dental hygienist, as defined and in accordance with the Illinois Dental Practice Act, working under the general supervision of a dentist and employed by a federally qualified health center~~dentists~~; and

B) behavioral health services as defined in Section 140.463(a).

4) Medically-necessary services and supplies furnished by or under the direction of a physician or dentist within the scope of licensed practice have been included in the cost report but neither fee-for-service nor encounter billings may be billed. Some examples of these services include:

A) medical case management;

B) laboratory services;

C) occupational therapy;

D) patient transportation;

E) pharmacy services;

F) physical therapy;

G) podiatric services;

H) optometric services;

I) speech and hearing services;

J) x-ray services;

K) health education;

L) nutrition services.

5) A federally qualified health center (FQHC) that adds behavioral health services or dental services on or after October 1, 2001, must notify the Department in writing. These services are to be billed as an encounter with a procedure code that appropriately identifies the service.

6) Any service that is no longer provided on or after October 1, 2001, or any new service added on or after October 1, 2001, must be communicated to the Department in writing.

7) Effective January 1, 2001, the Medicare, Medicaid and SCHIP Benefits Improvement and Protection Act (BIPA) precludes fee-for-service billings for any FQHC services provided with the exception of services identified in subsections (d)(8) and (d)(9).

8) Effective July 1, 2012 through June 30, 2013, a physician or APRN~~APN~~ may submit fee-for-service billings for implantable contraceptive devices administered in an FQHC. Reimbursement for the implantable contraceptive devices shall be made in accordance with the following:

A) To the extent that the implantable device was purchased under the 340B Drug Pricing Program, the device must be billed at the FQHC's actual acquisition cost;

B) The FQHC must be listed as the payee on the claim;

C) Reimbursement shall be made at the FQHC's actual acquisition cost or the rate on the Department's practitioner fee schedule, whichever is applicable;

D) This reimbursement shall be separate from any encounter payment the FQHC may receive for implanting the device.

9) Effective July 1, 2013, an FQHC may submit fee-for-service billings for LARCs. For dates of service October 1, 2014 and after, an FQHC may submit fee-for-service billing for non-surgical transcervical permanent contraceptive devices. Reimbursement for the implantable contraceptive device shall be made in accordance with the following:

A) To the extent that the LARCs or transcervical permanent devices were purchased under the 340B Drug Pricing Program, the device must be billed at the FQHC's actual acquisition cost;

B) Reimbursement shall be made at the FQHC's actual acquisition cost or the rate on the Department's practitioner fee schedule, whichever is applicable;

C) This reimbursement shall be separate from any encounter payment the FQHC may receive for implanting the device.

10) Tobacco cessation counseling services may be billed as an encounter if furnished by a provider as defined in Section 140.413(a)(15) within the designated coverage limitations.

e) School Based/Linked Health Clinics (Centers)
Covered services are the following services, when delivered in a school based/linked health center setting as described in Section 140.461(f):

1) Basic medical services: well child or adolescent exams, consisting of a comprehensive health history, complete physical assessment, screening procedures and age appropriate anticipatory guidance; immunizations; EPSDT services; diagnosis and treatment of acute illness and injury; basic laboratory tests; prescriptions and dispensing of commonly used medications for identified health conditions, in accordance with Medical Practice and Pharmacy Practice Acts; and acute management and on-going monitoring of chronic conditions, such as asthma, diabetes and seizure disorders.

2) Reproductive health services: gynecological exams; diagnosis and treatment of sexually transmitted diseases; family planning; prescribing and dispensing of birth control or referral for birth control services; pregnancy testing; treatment or referral for prenatal and postpartum care; and cancer screening.

(Source: Amended at 43 Ill. Reg. _____, effective _____)

Section 140.490 Medical Transportation

a) Payment for medical transportation shall be made to an individual, public, private or not-for-profit transportation carrier, whose operators are properly licensed, who provides the appropriate form of transportation and who bills and receives payment from the general public and other third party payors (except for private autos pursuant to subsection (a)(5)~~ of this Section~~). Eligible providers to be considered for payment include:

1) Ambulance providers who hold a valid license, permit or certification from the state where the business is headquartered or from the Secretary of State (see Section 3-401 of the Illinois Vehicle Title and Registration Law [625 ILCS 5/3-401] and Section 8-101 of the Illinois Vehicle Code [625 ILCS 5/8-101]) and pass health/safety inspections annually by the Department of Public Health (see the Emergency Medical Services (EMS) Systems Act [210 ILCS 50]). Out-of-state ambulance providers who provide services within Illinois must be in compliance with the EMS Systems Act [210 ILCS 50]. Vehicles operated by municipalities must meet the certification requirements contained in 77 Ill. Adm. Code 535, Subpart C, by July 1, 1987. The Department will grant exceptions to this requirement if the municipality can demonstrate that the Illinois Department of Public Health has granted a waiver or exception to such requirement.

2) Medi-car vehicles licensed by the Secretary of State (see Section 3-401 of the Illinois Vehicle Title and Registration Law and Section 8-101 of the Illinois Vehicle Code) or that hold a valid license, permit or certification from the state where the business is headquartered. Medi-car service is defined as transportation provided to a patient who is confined to a wheelchair and requires the use of a hydraulic or electric lift or ramp and wheelchair lockdown when the patient's condition does not require

medical observation, medical supervision, medical equipment, the administration of medications, or the administration of oxygen.

3) Taxicabs licensed by the Secretary of State and, when~~where~~ applicable, by local regulatory agencies (see Section 3-401 of the Illinois Vehicle Title and Registration Law and Section 8-101 of the Illinois Vehicle Code) or that hold a valid license, permit or certification from the state where the business is headquartered.

4) Service cars licensed as livery cars by the Secretary of State and, when~~where~~ applicable, by local regulatory agencies (see Section 3-401 of the Illinois Vehicle Title and Registration Law and Section 8-101 of the Illinois Vehicle Code) or that hold a valid license, permit or certification from the state where the business is headquartered. Service car service is defined as transportation provided to a patient by a passenger vehicle when that patient does not require ambulance or medi-car services.

5) Private automobiles licensed by the Secretary of State (see Section 3-401 of the Illinois Vehicle Title and Registration Law and Section 8-101 of the Illinois Vehicle Code) or licensed in the state of the owner's residence.

6) Helicopter providers who hold a valid license from the State of Illinois issued under the authority of the State of Illinois Department of Public Health, or are licensed in the state where services are provided.

7) Other modes of transportation such as buses, trains and commercial airplanes.

b) Except as provided in subsection (c)~~ of this Section~~, payment for medical transportation shall be made when transportation is provided for an eligible recipient to or from a source of medical care. Medical care is defined as any medically necessary service covered under the Medical Assistance Program. Payment for transportation will be made even when a covered medical service is provided free of charge or is reimbursed by a third party (for example, services provided by the U.S. Department of Veterans' Affairs).

c) Payment for medical transportation shall not be made when:

1) A means of transportation to the source of medical care is available free of

charge;

2) The transportation is for the purpose of filling a prescription or obtaining medical supplies, equipment or any other pharmacy related item; or

3) Proper prior or post approval authorization has not been made by the Department or its authorized agent.

d) When more than one passenger requiring medical services is transported, payment for the first passenger will be at the full rate including mileage, base rate and ancillaries, if provided; payment for the second or additional passengers requiring medical services will be at only the base rate and ancillaries, if provided.

e) Coverage for an employee attendant and a non-employee attendant.

1) For the purposes of this subsection (e):

A) "Employee attendant" means a person, other than the driver, who is an employee of a medi-car, service car or taxicab.

B) "Non-employee attendant" means a family member or other individual who may accompany the patient when there is a medical need for such an attendant.

2) The Department will pay for an attendant to accompany an eligible patient to and from the source of a covered medical service, by a medi-car, a service car or a taxicab, when the circumstances constitute one of the following medical necessities. A physician's statement may be required to verify the medical necessity.

A) To accompany the patient to a medical provider when needed, such as a parent going with a child to the doctor or when an attendant is needed to assist the patient;

B) To participate in the patient's treatment when medically necessary; or

C) To learn to care for the patient after discharge from the hospital.

3) The Department does not pay for transportation of family members to visit a hospitalized patient.

4) For dates of service prior to July 1, 2006, the use of an attendant is subject to prior approval in all situations except for the non-emergency trips described in Section 140.491(b)(2). In the instances that prior approval is not required for an attendant, medical necessity must be documented in the record. The Department's authorized prior approval agent may require documentation of medical necessity. A medi-car company may bill for the services of an employee and a non-employee attendant. Billings for the services of an employee attendant and a non-employee attendant are allowable when the~~such~~ services are rendered during a single trip. Service car and taxicab providers may receive payment only for a non-employee attendant.

5) For dates of service on or after July 1, 2006, the use of an attendant is subject to prior approval in all situations except for the non-emergency trips described in Section 140.491(b)(2). In the instances in which prior approval is not required for an attendant, medical necessity must be documented in the record. The Department's authorized prior approval agent may require documentation of medical necessity. A medi-car, service car or taxicab may bill for the services of an employee and a non-employee attendant.

f) Safety program certification requirement.

1) Safety training programs shall be approved by the Department and must include, at a minimum, all of the following components applicable to both drivers and employee attendants:

A) Passengers Assistance. Training must contain and/or convey information on courteous treatment of passengers; an understanding of different disabilities; instructions on safely loading and unloading passengers, including passengers with disability devices; and procedures for dropping off and picking up passengers.

B) Vehicle Operation and Passenger Safety. Training must contain information on vehicle inspection; proper seatbelt usage for adults;

proper infant and child restraint usage, including proper method for securing child seats; and proper usage of security lock-down devices.

C) Emergency Procedures. Training must contain information on the usage of vehicle emergency equipment; procedures to follow in case of an accident or breakdown; and proper precautions and cleanup of blood borne pathogens.

2) For dates of service on or after July 1, 2008, all providers of non-emergency medi-car and service car transportation must certify that all drivers and employee attendants have completed a safety program approved by the Department, prior to supplying medical transportation to a client. For services provided between July 1, 2008 and October 31, 2008, the Department will consider providers in compliance with the safety program certification requirement~~,~~ if the employee driver and/or attendant completed an approved safety training program by November 1, 2008.

3) Drivers and employee attendants transporting participants of the Department's Medical Assistance programs must complete an approved safety program every three years. Documentation certifying completion of an approved safety program must be maintained by the transportation provider and available to the Department upon request. The safety program certification shall not be issued by an entity affiliated with the transportation provider.

4) The names of the driver and employee attendant actually transporting the participant shall be documented in the medical transportation service record as required at Section 140.494(a).

5) Failure of the transportation provider to maintain and, upon request from the Department, produce the documentation of required training shall result in the recovery of all payments made by the Department for services rendered by a non-certified driver or employee attendant.

6) Exceptions to the safety program certification requirement will be permitted only in the following circumstances and documentation substantiating the exception must be available to the Department upon request.

DEPARTMENT OF HEALTHCARE AND FAMILY SERVICES

NOTICE OF PROPOSED AMENDMENTS

A) The medi-car or service car provider receives federal funding under 49 USC 5307 or 5311. The exception is applicable only during the period of federal funding.

B) The driver or attendant is licensed as an Emergency Medical Technician by the Illinois Department of Public Health, or comparable licensing entity in the state in which the transportation provider is located. This exception is applicable only for periods that the individual holds an active EMT license.

C) The driver or attendant holds a valid School Bus Driver Permit pursuant to 625 ILCS 5/6-106.1 and is providing services on behalf of a local education agency. This exception is applicable only for periods that the individual holds a current valid school bus permit.

(Source: Amended at 43 Ill. Reg. _____, effective _____)

DEPARTMENT OF INSURANCE

NOTICE OF PROPOSED AMENDMENTS

1) Heading of the Part: Internal Security Standards and Fidelity Bonds

2) Code Citation: 50 Ill. Adm. Code 3501

3)

Section Numbers:	Proposed Actions:
3501.5	Amendment
3501.7	New Section
3501.10	Amendment
3501.20	Amendment
3501.30	Amendment
3501.50	Amendment
3501.60	Amendment
3501.EXHIBIT A	Repealed

4) Statutory Authority: Implementing the Farm Mutual Insurance Act of 1986 [215 ILCS 120] and authorized by Section 401 of the Illinois Insurance Code [215 ILCS 5/401].

5) A Complete Description of the Subjects and Issues Involved: Changes in the regulation of farm mutual companies are being made to Sections 3501.50 and 3501.EXHIBIT A to adjust to the evolution of fidelity and surety bonds being written on a claims-made basis rather than an occurrence basis. Also, the amounts of coverage are being transitioned to follow the NAIC examination guidelines.

The main issue has been that the rule requires a one-year discovery period, which was a common element when these bonds were written on an occurrence basis. Currently and for a number of years now, these bonds have been written on a "discovery" or claims-made basis which renders the "discovery period" language moot. With the change to a "discovery" basis, any claim which comes in while the bond is in effect will be covered by the surety bond. The change to the amount of coverage is being repealed so that the NAIC examination guidance can be used instead.

These exact standards described above that the Department wishes to apply to farm mutual companies are also being implemented for other types of companies regulated by the Department in another rulemaking for 50 Ill. Adm. Code 904.50(a). To ensure that all companies are subject to the same standards and to streamline the rulemaking process for the future, we are amending Section 3501.50 so that it incorporates the standards being implemented for Section 904.50(a).

DEPARTMENT OF INSURANCE

NOTICE OF PROPOSED AMENDMENTS

In the same vein, to provide clarification to farm mutual companies about the perils that their policies are required to cover under Section 8(6) of the Farm Mutual Insurance Company Act of 1986, the Department is adapting the language from Section 904.50(b).

Additionally, the note at the bottom of Section 3501.10 is being deleted as obsolete because farm mutual insurance companies now are allowed to invest in securities other than government bonds and obligations.

Finally, non-substantive revisions are proposed throughout this Part to improve readability, including among other things the insertion of a new Definitions section to reduce verbiage elsewhere in this Part.

6) Any published studies or reports, along with the sources of underlying data, that were used when comprising this rulemaking, in accordance with 1 Ill. Adm. Code 100.355: None

7) Will this rulemaking replace any emergency rule currently in effect? No

8) Does this rulemaking contain an automatic repeal date? No

9) Does this rulemaking contain incorporations by reference? No

10) Are there any other rulemakings pending on this Part? No

11) Statement of Statewide Policy Objective: This rulemaking will not require a local government to establish, expand or modify its activities in such a way as to necessitate additional expenditures from local revenues.

12) Time, Place and Manner in which interested persons may comment on this proposed rulemaking: Persons who wish to comment on this proposed rulemaking may submit written comments no later than 45 days after the publication of this Notice to:

Robert Planthold	or	Susan Anders
Assistant General Counsel		Rules Coordinator
Illinois Department of Insurance		Illinois Department of Insurance
122 S Michigan Ave, Fl 19		320 West Washington, Fl 4
Chicago IL 60603-6137		Springfield IL 62767-0002
312/814-5445		217/558-0957

fax: 312/814-2862

13) Initial Regulatory Flexibility Analysis:

A) Types of small businesses, small municipalities and not-for-profit corporations affected: None

B) Reporting, bookkeeping or other procedures required for compliance: None

C) Types of professional skills necessary for compliance: None

14) Regulatory Agenda on which this rulemaking was summarized: January 2018

The full text of the Proposed Amendments begins on the next page:

DEPARTMENT OF INSURANCE

NOTICE OF PROPOSED AMENDMENTS

TITLE 50: INSURANCE
CHAPTER I: DEPARTMENT OF INSURANCE
SUBCHAPTER mm: FARM MUTUAL INSURANCE COMPANY ACT OF 1986

PART 3501
INTERNAL SECURITY STANDARDS AND FIDELITY BONDS

Section
3501.5 Introduction
3501.7 Definitions
3501.10 Registration of Securities
3501.20 Custody Care and Disposition of Securities
3501.30 Signature to Checks – Facsimile Signatures
3501.40 Bank Balance Verification
3501.50 Bond Requirements
3501.60 Records

3501.EXHIBIT A Bond Amounts For Amount of Assets (Repealed)

AUTHORITY: Implementing the Farm Mutual Insurance Act of 1986 [215 ILCS 120] and authorized by Section 401 of the Illinois Insurance Code [215 ILCS 5/401].

SOURCE: Amended September 1, 1959; codified at 7 Ill. Reg. 276; old Part 5501 repealed at 20 Ill. Reg. 12797, effective September 16, 1996; Part 5301 recodified to Part 5501 at 20 Ill. Reg. 6347, effective April 19, 1996; expedited correction at 25 Ill. Reg. 15453, effective April 19, 1996; transferred from the Department of Insurance to the Department of Financial and Professional Regulation pursuant to Executive Order 2004-6 on July 1, 2004; transferred from the Department of Financial and Professional Regulation to the Department of Insurance pursuant to Executive Order 2009-4 on July 1, 2009; 50 Ill. Adm. Code 5501 recodified to 50 Ill. Adm. Code 3501 at 41 Ill. Reg. 2124; amended at 43 Ill. Reg. _____, effective _____.

Section 3501.5 Introduction

All ~~District, County, Township and Special Act Mutual insurance~~ companies ~~, hereinafter referred to as "such companies"~~ are hereby ~~directed and~~ required, ~~as soon after July 1, 1959 as possible,~~ by resolution of their~~the~~ Board of Directors ~~thereof~~ or other appropriate action, to conform their internal functions to the ~~following~~ minimum standards established in this Part.

(Source: Amended at 43 Ill. Reg. _____, effective _____)

DEPARTMENT OF INSURANCE

NOTICE OF PROPOSED AMENDMENTS

Section 3501.7 Definitions

"Act" means the Farm Mutual Insurance Act of 1986 [215 ILCS 120].

"Company" means any company described in Section 1 of the Act.

"Department" means the Illinois Department of Insurance.

"Director" means the Director of the Illinois Department of Insurance.

"Security" has the meaning ascribed in Section 2.1 of the Illinois Securities Law of 1953 [815 ILCS 5].

(Source: Added at 43 Ill. Reg. _____, effective _____)

Section 3501.10 Registration of Securities

a) All ~~bonds, stocks, notes, shares, debentures, evidences of indebtedness, certificates of interest or participation, certificates of deposit for a security and other~~ securities~~, whether negotiable or not, hereinafter referred to as "such securities",~~ belonging to or in the possession, custody or control of any ~~such~~ company shall be registered, issued to, and carried in the name of the~~such~~ company except:

1) Securities pledged or hypothecated with the~~such~~ company as security for indebtedness~~indebtness~~ or obligations to the~~such~~ company;

2) Securities that~~which~~ are only issuable in bearer form, i.e., securities that~~which~~ cannot be issued in registered form;

3) Securities in "custodial" accounts maintained with a bank or trust company, licensed by the United States or any state thereof, that~~which said bank or trust company~~ is regularly examined by the licensing authority; provided the ~~such "~~custodial" accounts shall be the undivided responsibility of the depository and provided further that the~~such "~~custodial" account shall be established conformably with and conducted in compliance with Section 3501.20;

4) Securities in vaults or other repositories on the premises of the company, or in safe deposit boxes leased in the name of the company, access to which ~~said vaults, other depositories or safe deposit boxes,~~ is controlled as required by Section 3501.20;

5) Securities in street form and in the custody of a registered dealer in securities, for a period not exceeding 30 days as to any security, provided that the~~no such~~ registered dealer in securities shall not be an officer, director, agent or employee of the owner of those~~such~~ securities and provided further that accounts with registered~~such~~ dealers shall be established conformably with and conducted in compliance with Section 3501.20;

6) Money shall not be loaned to any officer, director, employee, policyholder of the company or any other individual.

~~(Note: The law limits investments in securities to U.S. Government bonds and direct obligations of the State of Illinois or its municipalities).~~

(Source: Amended at 43 Ill. Reg. _____, effective _____)

Section 3501.20 Custody Care and Disposition of Securities

a) Transfer, sale, assignment or disposition of any security belonging to any ~~such~~ company, other than upon the surrender of the security~~thereof~~ for payment at maturity or under an option of the maker ~~thereof~~ to prepay the same, shall first have been authorized by the Board of Directors~~,~~ or by a Board committee ~~thereof~~ charged with the duty of supervising investments and loans.

b) Any instrument for the assignment, sale, transfer or disposition of any ~~such~~ securities and all checks or other orders for disbursement of funds of the company in connection with the purchase of any ~~such~~ securities~~,~~ shall require the signature of at least two officers or employees ~~who shall have been so~~ authorized by the Board of Directors~~,~~ or by a Board committee ~~thereof~~ charged with the duty of supervising investments and loans.

c) Access to any and all vaults or other repositories on the premises of any company containing securities of the company and access to any safe deposit boxes containing those~~such~~ securities shall be limited to officers and employees

designated by the Board of Directors. The~~and such~~ designation shall require that at least two of the designated persons ~~so designated shall~~ be present at the time of entry and during the access to the~~such~~ vault, repository or safe deposit box.

d) All securities and original records of the company shall be kept in fire resistant files or vaults.

(Source: Amended at 43 Ill. Reg. _____, effective _____)

Section 3501.30 Signature to Checks-Facsimile Signatures

a) All checks~~,~~ issued for the disbursement of funds belonging to a~~such~~ company shall require the signature of at least two officers or employees of the company who ~~shall~~ have been ~~so~~ authorized by its~~the~~ Board of Directors. All ~~of such company, and all~~ checks shall be numbered and ~~shall be~~ recorded consecutively in an original record of cash disbursements.

b) All collections made by agents or representatives of the company must be turned over to the company at least every three months~~,~~ or more often~~oftener~~ if the volume of cash warrants.

c) All receipts of the company must be deposited in the bank intact in the name of the company. Receipts must not be deposited in the name of an officer of the company.

d) Companies must retain a duplicate deposit slip covering all bank deposits and listing all checks in detail, in addition to an original record of all cash receipts.

(Source: Amended at 43 Ill. Reg. _____, effective _____)

Section 3501.50 Bond Requirements

a) All ~~such~~ companies shall procure and maintain in force the surety bonds ~~on employees, officers or positions~~ required under Section 8(6) of the Act in accordance with the standards provided in 50 Ill. Adm. Code 904.50(a).~~in an amount not less than the amount set forth in the column "Minimum Amount of Bond" (see Exhibit A), based on the amount of admitted assets of the company (as determined from year to year hereafter) stated in the annual statement of such company as filed with the Illinois Insurance Department. All such bonds shall be~~

~~written with at least a one year discovery period and if written with less than a 3 year discovery period, shall contain a provision that no cancellation or termination of the bond, whether by or at the request of the insured or by the underwriter, shall take effect prior to the expiration of 90 days after written notice of such cancellation or termination has been filed with the Illinois Department of Insurance unless an earlier date of such cancellation or termination is approved by said Department of Insurance.~~

b) Surety bonds procured or maintained under this Section shall include all persons handling company funds and all officers, directors and employees for the following perils, which may be covered under separate policies:~~covering affiliated and/or subsidiary companies which are substantially under the same management and control may be written to cover such affiliated and/or subsidiary companies jointly. The total admitted assets of the affiliated and/or subsidiary company having the largest total admitted assets shall be used in calculating the amount of surety cover required under subsection (a).~~

1) Dishonesty of persons handling company funds and of officers, directors and employees;

2) Robbery, burglary, larceny, theft, false pretense, holdup, misplacement, mysterious disappearance, and damage or destruction while property is in any bank or any recognized place of safe deposit, or in transit; and

3) Forgery or alteration.

(Source: Amended at 43 Ill. Reg. _____, effective _____)

Section 3501.60 Records

a) Each company shall keep its books, records, documents, accounts and vouchers in such manner that its financial condition can be ascertained, ~~and so that~~ its financial statements filed with the Director can be readily verified, and its compliance with the law can be determined.

b) The books of the company must be closed as of December 31. (This is a statutory requirement.)

c) Original records may not be destroyed without first securing authority of the

Director~~ of Insurance~~. (See 50 Ill. Adm. Code 3502~~)~~.)

d) A policy register that~~which~~ properly reflects all changes in the policy during its term should be maintained.

e) Original records should be kept in fire resistant files.

f) A petty cash fund, if maintained, shall be for the payment of small bills or for making change only. Each disbursement from the fund~~therefrom~~ must be supported by a signed voucher or receipted invoice. The total of the cash, checks~~,~~ and paid vouchers in the fund shall at all times equal the total of the fund as originally set up. The petty cash fund should be reimbursed at regular intervals and always on the last business day of each year.

(Source: Amended at 43 Ill. Reg. _____, effective _____)

Section 3501.EXHIBIT A Bond Amounts For Amount of Assets (Repealed)

~~TOTAL ADMITTED ASSETS~~		~~MININUM AMOUNT OF BOND~~		
~~Under $100,000~~		~~$2,000 plus 8% of total Assets~~		
~~MORE THAN:~~	~~BUT NOT MORE THAN:~~			
~~$ 100,000~~	~~$ 600,000~~	~~$ 10,000 plus~~	~~4% of assets over~~	~~$ 100,000~~
~~600,000~~	~~1,200,000~~	~~30,000 plus~~	~~3⅓% of assets over~~	~~600,000~~
~~1,200,000~~	~~3,200,000~~	~~50,000 plus~~	~~2½% of assets over~~	~~1,200,000~~
~~3,200,000~~	~~4,450,000~~	~~100,000 plus~~	~~2% of assets over~~	~~3,200,000~~
~~4,450,000~~	~~6,450,000~~	~~125,000 plus~~	~~1¼% of assets over~~	~~4,450,000~~
~~6,450,000~~	~~90,450,000~~	~~150,000 plus~~	~~⅝% of assets over~~	~~6,450,000~~
~~90,450,000~~	~~350,450,000~~	~~675,000 plus~~	~~⅜% of assets over~~	~~90,450,000~~
~~350,450,000~~	~~1,070,450,000~~	~~1,625,000 plus~~	~~$^{3}/_{16}$% of assets over~~	~~350,000,000~~
~~1,070,450,000~~	~~-----~~	~~3,075,000 plus~~	~~$^{3}/_{32}$% of assets over~~	~~1,070,450,000~~
		~~until total bond equals $5,000,000~~		

(Source: Repealed at 43 Ill. Reg. _____, effective _____)

DEPARTMENT OF REVENUE

NOTICE OF PROPOSED AMENDMENTS

1) Heading of the Part: Income Tax

2) Code Citation: 86 Ill. Adm. Code 100

3)

Section Numbers:	Proposed Actions:
100.3370	Amendment
100.3380	Amendment
100.3600	New Section
100.5220	Amendment
100.5270	Amendment
100.9700	Amendment
100.Appendix A	Repealed
100.Table A	Repealed
100.Table B	Repealed

4) Statutory Authority: 35 ILCS 5/304, 304(e), 304(f), 1501 and 1501(a)(27)

5) A Complete Description of the Subjects and Issues Involved: This rulemaking implements the provision in PA 100-22 that repealed the prohibition on persons who are required to use different apportionment methods from being members of the same unitary business group. This rulemaking provides guidance on how taxpayers should combine the income and apportionment factors of unitary business group members that are required to use different apportionment methods.

6) Published studies or reports, and sources of underlying data, used to compose this rulemaking: None

7) Will this rulemaking replace any emergency rule currently in effect: No

8) Does this rulemaking contain an automatic repeal date? No

9) Does this rulemaking contain incorporations by reference? No

10) Are there any other rulemakings pending on this Part? Yes

Section Number:	Proposed Action:	*Illinois Register* Citation:
100.2850	Amendment	41 Ill. Reg. 15198; December 26, 2017

DEPARTMENT OF REVENUE

NOTICE OF PROPOSED AMENDMENTS

11) Statement of Statewide Policy Objective: This rulemaking does not create a State mandate, nor does it modify any existing State mandates.

12) Time, Place and Manner in which interested persons may comment on this proposed rulemaking: Persons who wish to submit comments on this proposed rulemaking may submit them in writing by no later than 45 days after publication of this Notice to:

Brian Fliflet
Deputy General Counsel
Illinois Department of Revenue
Legal Services Office
101 West Jefferson St. MC 5-500
Springfield IL 62794

217/782-2844

13) Initial Regulatory Flexibility Analysis:

A) Types of small businesses, small municipalities, and not-for-profit corporations affected: Partnerships

B) Reporting, bookkeeping or other procedures required for compliance: Unknown

C) Types of professional skills necessary for compliance: Unknown

14) Regulatory Agenda on which this rulemaking was summarized: July 2018

The full text of the Proposed Amendments begins on the next page:

DEPARTMENT OF REVENUE

NOTICE OF PROPOSED AMENDMENTS

TITLE 86: REVENUE
CHAPTER I: DEPARTMENT OF REVENUE

PART 100
INCOME TAX

SUBPART A: TAX IMPOSED

Section
100.2000 Introduction
100.2050 Net Income (IITA Section 202)
100.2055 Standard Exemption (IITA Section 204)
100.2060 Compassionate Use of Medical Cannabis Pilot Program Act Surcharge (IITA Section 201(o))

SUBPART B: CREDITS

Section
100.2100 Replacement Tax Investment Credit Prior to January 1, 1994 (IITA Section 201(e))
100.2101 Replacement Tax Investment Credit (IITA 201(e))
100.2110 Investment Credit; Enterprise Zone and River Edge Redevelopment Zone (IITA Section 201(f))
100.2120 Jobs Tax Credit; Enterprise Zone and Foreign Trade Zone or Sub-Zone and River Edge Redevelopment Zone (IITA Section 201(g))
100.2130 Investment Credit; High Impact Business (IITA 201(h))
100.2140 Credit Against Income Tax for Replacement Tax (IITA 201(i))
100.2150 Training Expense Credit (IITA 201(j))
100.2160 Research and Development Credit (IITA Section 201(k))
100.2163 Environmental Remediation Credit (IITA 201(l))
100.2165 Education Expense Credit (IITA 201(m))
100.2170 Tax Credits for Coal Research and Coal Utilization Equipment (IITA 206)
100.2171 Angel Investment Credit (IITA 220)
100.2175 Invest in Kids Credit (IITA 224)
100.2180 Credit for Residential Real Property Taxes (IITA 208)
100.2185 Film Production Services Credit (IITA Section 213)
100.2190 Tax Credit for Affordable Housing Donations (IITA Section 214)
100.2193 Student-Assistance Contributions Credit (IITA 218)
100.2195 Dependent Care Assistance Program Tax Credit (IITA 210)

DEPARTMENT OF REVENUE

NOTICE OF PROPOSED AMENDMENTS

100.2196 Employee Child Care Assistance Program Tax Credit (IITA Section 210.5)
100.2197 Foreign Tax Credit (IITA Section 601(b)(3))
100.2198 Economic Development for a Growing Economy Credit (IITA 211)
100.2199 Illinois Earned Income Tax Credit (IITA Section 212)

SUBPART C: NET OPERATING LOSSES OF UNITARY BUSINESS GROUPS OCCURRING PRIOR TO DECEMBER 31, 1986

Section
100.2200 Net Operating Losses Occurring Prior to December 31, 1986, of Unitary Business Groups: Treatment by Members of the Unitary Business Group. (IITA Section 202) − Scope
100.2210 Net Operating Losses Occurring Prior to December 31, 1986, of Unitary Business Groups: Treatment by Members of the Unitary Business Group (IITA Section 202) − Definitions
100.2220 Net Operating Losses Occurring Prior to December 31, 1986, of Unitary Business Groups: Treatment by Members of the Unitary Business Group. (IITA Section 202) − Current Net Operating Losses: Offsets Between Members
100.2230 Net Operating Losses Occurring Prior to December 31, 1986, of Unitary Business Groups: Treatment by Members of the Unitary Business Group. (IITA Section 202) − Carrybacks and Carryforwards
100.2240 Net Operating Losses Occurring Prior to December 31, 1986, of Unitary Business Groups: Treatment by Members of the Unitary Business Group: (IITA Section 202) − Effect of Combined Net Operating Loss in Computing Illinois Base Income
100.2250 Net Operating Losses Occurring Prior to December 31, 1986, of Unitary Business Groups: Treatment by Members of the Unitary Business Group: (IITA Section 202) − Deadline for Filing Claims Based on Net Operating Losses Carried Back From a Combined Apportionment Year

SUBPART D: ILLINOIS NET LOSS DEDUCTIONS FOR LOSSES OCCURRING ON OR AFTER DECEMBER 31, 1986

Section
100.2300 Illinois Net Loss Deduction for Losses Occurring On or After December 31, 1986 (IITA 207)
100.2310 Computation of the Illinois Net Loss Deduction for Losses Occurring On or After December 31, 1986 (IITA 207)
100.2320 Determination of the Amount of Illinois Net Loss for Losses Occurring On or

After December 31, 1986
100.2330 Illinois Net Loss Carrybacks and Net Loss Carryovers for Losses Occurring On or After December 31, 1986 (IITA Section 207)
100.2340 Illinois Net Losses and Illinois Net Loss Deductions for Losses Occurring On or After December 31, 1986, of Corporations that are Members of a Unitary Business Group: Separate Unitary Versus Combined Unitary Returns
100.2350 Illinois Net Losses and Illinois Net Loss Deductions, for Losses Occurring On or After December 31, 1986, of Corporations that are Members of a Unitary Business Group: Changes in Membership
100.2360 Illinois Net Losses and Illinois Net Loss Deductions for Losses of Cooperatives Occurring On or After December 31, 1986 (IITA Section 203(e)(2)(F))

SUBPART E: ADDITIONS TO AND SUBTRACTIONS FROM TAXABLE INCOME OF INDIVIDUALS, CORPORATIONS, TRUSTS AND ESTATES AND PARTNERSHIPS

Section
100.2405 Gross Income, Adjusted Gross Income, Taxable Income and Base Income Defined; Double Deductions Prohibited; Legislative Intention (IITA Section 203(e), (g) and (h))
100.2410 Net Operating Loss Carryovers for Individuals, and Capital Loss and Other Carryovers for All Taxpayers (IITA Section 203)
100.2430 Addition and Subtraction Modifications for Transactions with 80-20 and Noncombination Rule Companies
100.2435 Addition Modification for Student-Assistance Contribution Credit (IITA Sections 203(a)(2)(D-23), (b)(2)(E-16), (c)(2)(G-15), (d)(2)(D-10))
100.2450 IIT Refunds (IITA Section 203(a)(2)(H), (b)(2)(F), (c)(2)(J) and (d)(2)(F))
100.2455 Subtraction Modification: Federally Disallowed Deductions (IITA Sections 203(a)(2)(M), 203(b)(2)(I), 203(c)(2)(L) and 203(d)(2)(J))
100.2465 Claim of Right Repayments (IITA Section 203(a)(2)(P), (b)(2)(Q), (c)(2)(P) and (d)(2)(M))
100.2470 Subtraction of Amounts Exempt from Taxation by Virtue of Illinois Law, the Illinois or U.S. Constitutions, or by Reason of U.S. Treaties or Statutes (IITA Sections 203(a)(2)(N), 203(b)(2)(J), 203(c)(2)(K) and 203(d)(2)(G))
100.2480 Enterprise Zone and River Edge Redevelopment Zone Dividend Subtraction (IITA Sections 203(a)(2)(J), 203(b)(2)(K), 203(c)(2)(M) and 203(d)(2)(K))
100.2490 Foreign Trade Zone/High Impact Business Dividend Subtraction (IITA Sections 203(a)(2)(K), 203(b)(2)(L), 203(c)(2)(O), 203(d)(2)(M))

SUBPART F: BASE INCOME OF INDIVIDUALS

DEPARTMENT OF REVENUE

NOTICE OF PROPOSED AMENDMENTS

Section
100.2510 Subtraction for Contributions to Illinois Qualified Tuition Programs (Section 529 Plans) (IITA Section 203(a)(2)(Y)
100.2565 Subtraction for Recovery of Itemized Deductions (IITA Section 203(a)(2)(I))
100.2580 Medical Care Savings Accounts (IITA Sections 203(a)(2)(D-5), 203(a)(2)(S) and 203(a)(2)(T))
100.2590 Taxation of Certain Employees of Railroads, Motor Carriers, Air Carriers and Water Carriers

SUBPART G: BASE INCOME OF CORPORATIONS

Section
100.2655 Subtraction Modification for Enterprise Zone and River Edge Redevelopment Zone Interest (IITA Section 203(b)(2)(M))
100.2657 Subtraction Modification for High Impact Business Interest (IITA Section 203(b)(2)(M-1))
100.2665 Subtraction for Payments to an Attorney-in-Fact (IITA Section 203(b)(2)(R))
100.2668 Subtraction for Dividends from Controlled Foreign Corporations (IITA Section 203(b)(2)(Z))

SUBPART H: BASE INCOME OF TRUSTS AND ESTATES

100.2770 Subtraction for Recovery of Itemized Deductions of a Decedent (IITA Section 203(c)(2)(W))
100.2775 Subtraction for Refunds of Taxes Paid to Other States for Which a Credit Was Claimed (IITA Section 203(c)(2)(X))

SUBPART J: GENERAL RULES OF ALLOCATION AND APPORTIONMENT OF BASE INCOME

Section
100.3000 Terms Used in Article 3 (IITA Section 301)
100.3010 Business and Nonbusiness Income (IITA Section 301)
100.3015 Business Income Election (IITA Section 1501)
100.3020 Resident (IITA Section 301)

SUBPART K: COMPENSATION

DEPARTMENT OF REVENUE

NOTICE OF PROPOSED AMENDMENTS

Section
100.3100 Compensation (IITA Section 302)
100.3110 State (IITA Section 302)
100.3120 Allocation of Compensation Paid to Nonresidents (IITA Section 302)

SUBPART L: NON-BUSINESS INCOME OF PERSONS OTHER THAN RESIDENTS

Section
100.3200 Taxability in Other State (IITA Section 303)
100.3210 Commercial Domicile (IITA Section 303)
100.3220 Allocation of Certain Items of Nonbusiness Income by Persons Other Than Residents (IITA Section 303)

SUBPART M: BUSINESS INCOME OF PERSONS OTHER THAN RESIDENTS

Section
100.3300 Allocation and Apportionment of Base Income (IITA Section 304)
100.3310 Business Income of Persons Other Than Residents (IITA Section 304) − In General
100.3320 Business Income of Persons Other Than Residents (IITA Section 304) − Apportionment (Repealed)
100.3330 Business Income of Persons Other Than Residents (IITA Section 304) − Allocation
100.3340 Business Income of Persons Other Than Residents (IITA Section 304)
100.3350 Property Factor (IITA Section 304)
100.3360 Payroll Factor (IITA Section 304)
100.3370 Sales Factor (IITA Section 304)
100.3371 Sales Factor for Telecommunications Services
100.3373 Sales Factor for Publishing
100.3380 Special Rules (IITA Section 304)
100.3390 Petitions for Alternative Allocation or Apportionment (IITA Section 304(f))
100.3400 Apportionment of Business Income of Financial Organizations for Taxable Years Ending Prior to December 31, 2008 (IITA Section 304(c))
100.3405 Apportionment of Business Income of Financial Organizations for Taxable Years Ending on or after December 31, 2008 (IITA Section 304(c))
100.3420 Apportionment of Business Income of Insurance Companies (IITA Section 304(b))
100.3450 Apportionment of Business Income of Transportation Companies (IITA Section 304(d))

DEPARTMENT OF REVENUE

NOTICE OF PROPOSED AMENDMENTS

100.3500 Allocation and Apportionment of Base Income by Nonresident Partners
100.3600 Combined Apportionment for Taxpayers Using Different Apportionment Formulas (IITA Section1501(a)(27))

SUBPART N: ACCOUNTING

Section
100.4500 Carryovers of Tax Attributes (IITA Section 405)

SUBPART O: TIME AND PLACE FOR FILING RETURNS

Section
100.5000 Time for Filing Returns (IITA Section 505)
100.5010 Place for Filing Returns: All Taxpayers (IITA Section 505)
100.5020 Extensions of Time for Filing Returns: All Taxpayers (IITA Section 505)
100.5030 Taxpayer's Notification to the Department of Certain Federal Changes Arising in Federal Consolidated Return Years, and Arising in Certain Loss Carryback Years (IITA Section 506)
100.5040 Innocent Spouses
100.5050 Frivolous Returns
100.5060 Reportable Transactions (IITA Section 501(b))
100.5070 List of Investors in Potentially Abusive Tax Shelters and Reportable Transactions
100.5080 Registration of Tax Shelters (IITA Section 1405.5)

SUBPART P: COMPOSITE RETURNS

Section
100.5100 Composite Returns: Eligibility (IITA Section 502(f))
100.5110 Composite Returns: Responsibilities of Authorized Agent
100.5120 Composite Returns: Individual Liability
100.5130 Composite Returns: Required forms and computation of Income (IITA Section 502(f))
100.5140 Composite Returns: Estimated Payments
100.5150 Composite Returns: Tax, Penalties and Interest
100.5160 Composite Returns: Credits on Separate Returns
100.5170 Composite Returns: Definition of a "Lloyd's Plan of Operation"
100.5180 Composite Returns: Overpayments and Underpayments

SUBPART Q: COMBINED RETURNS

DEPARTMENT OF REVENUE

NOTICE OF PROPOSED AMENDMENTS

Section
100.5200 Filing of Combined Returns
100.5201 Definitions and Miscellaneous Provisions Relating to Combined Returns
100.5205 Election to File a Combined Return
100.5210 Procedures for Elective and Mandatory Filing of Combined Returns
100.5215 Filing of Separate Unitary Returns (IITA Section 304(e))
100.5220 Designated Agent for the Members (IITA Section 304(e))
100.5230 Combined Estimated Tax Payments
100.5240 Claims for Credit of Overpayments
100.5250 Liability for Combined Tax, Penalty and Interest
100.5260 Combined Amended Returns
100.5265 Common Taxable Year
100.5270 Computation of Combined Net Income and Tax (IITA Section 304(e))
100.5280 Combined Return Issues Related to Audits

SUBPART R: PAYMENTS

Section
100.6000 Payment on Due Date of Return (IITA Section 601)

SUBPART S: REQUIREMENT AND AMOUNT OF WITHHOLDING

Section
100.7000 Requirement of Withholding (IITA Section 701)
100.7010 Compensation Paid in this State (IITA Section 701)
100.7020 Transacting Business Within this State (IITA Section 701)
100.7030 Payments to Residents (IITA Section 701)
100.7035 Nonresident Partners, Subchapter S Corporation Shareholders, and Trust Beneficiaries (IITA Section 709.5)
100.7040 Employer Registration (IITA Section 701)
100.7050 Computation of Amount Withheld (IITA Section 702)
100.7060 Additional Withholding (IITA Section 701)
100.7070 Voluntary Withholding (IITA Section 701)
100.7080 Correction of Underwithholding or Overwithholding (IITA Section 701)
100.7090 Reciprocal Agreement (IITA Section 701)
100.7095 Cross References

SUBPART T: AMOUNT EXEMPT FROM WITHHOLDING

DEPARTMENT OF REVENUE

NOTICE OF PROPOSED AMENDMENTS

Section
100.7100 Withholding Exemption (IITA Section 702)
100.7110 Withholding Exemption Certificate (IITA Section 702)
100.7120 Exempt Withholding Under Reciprocal Agreements (IITA Section 702)

SUBPART U: INFORMATION STATEMENT

Section
100.7200 Reports for Employee (IITA Section 703)

SUBPART V: EMPLOYER'S RETURN AND PAYMENT OF TAX WITHHELD

Section
100.7300 Returns and Payments of Income Tax Withheld from Wages (IITA Sections 704 and 704A)
100.7310 Returns Filed and Payments Made on Annual Basis (IITA Sections 704 and 704A)
100.7320 Time for Filing Returns and Making Payments for Taxes Required to Be Withheld Prior to January 1, 2008 (IITA Section 704)
100.7325 Time for Filing Returns and Making Payments for Taxes Required to Be Withheld On or After January 1, 2008 (IITA Section 704A)
100.7330 Payment of Tax Required to be Shown Due on a Return (IITA Sections 704 and 704A)
100.7340 Correction of Underwithholding or Overwithholding (IITA Section 704)
100.7350 Domestic Service Employment (IITA Sections 704 and 704A)
100.7360 Definitions and Special Provisions Relating to Reporting and Payment of Income Tax Withheld (IITA Sections 704 and 704A)
100.7370 Penalty and Interest Provisions Relating to Reporting and Payment of Income Tax Withheld (IITA Sections 704 and 704A)
100.7380 Economic Development for a Growing Economy (EDGE) and Small Business Job Creation Credit (IITA Section 704A(g) and (h))

SUBPART W: ESTIMATED TAX PAYMENTS

Section
100.8000 Payment of Estimated Tax (IITA Section 803)
100.8010 Failure to Pay Estimated Tax (IITA Sections 804 and 806)

DEPARTMENT OF REVENUE

NOTICE OF PROPOSED AMENDMENTS

SUBPART X: COLLECTION AUTHORITY

Section
100.9000 General Income Tax Procedures (IITA Section 901)
100.9010 Collection Authority (IITA Section 901)
100.9020 Child Support Collection (IITA Section 901)

SUBPART Y: NOTICE AND DEMAND

Section
100.9100 Notice and Demand (IITA Section 902)

SUBPART Z: ASSESSMENT

Section
100.9200 Assessment (IITA Section 903)
100.9210 Waiver of Restrictions on Assessment (IITA Section 907)

SUBPART AA: DEFICIENCIES AND OVERPAYMENTS

Section
100.9300 Deficiencies and Overpayments (IITA Section 904)
100.9310 Application of Tax Payments Within Unitary Business Groups (IITA Section 603)
100.9320 Limitations on Notices of Deficiency (IITA Section 905)
100.9330 Further Notices of Deficiency Restricted (IITA Section 906)

SUBPART BB: CREDITS AND REFUNDS

Section
100.9400 Credits and Refunds (IITA Section 909)
100.9410 Limitations on Claims for Refund (IITA Section 911)
100.9420 Recovery of Erroneous Refund (IITA Section 912)

SUBPART CC: INVESTIGATIONS AND HEARINGS

Section
100.9500 Access to Books and Records (IITA Section 913)
100.9505 Access to Books and Records − 60-Day Letters (IITA Section 913) (Repealed)
100.9510 Taxpayer Representation and Practice Requirements
100.9520 Conduct of Investigations and Hearings (IITA Section 914)

DEPARTMENT OF REVENUE

NOTICE OF PROPOSED AMENDMENTS

100.9530 Books and Records

SUBPART DD: JUDICIAL REVIEW

Section
100.9600 Administrative Review Law (IITA Section 1201)

SUBPART EE: DEFINITIONS

Section
100.9700 Unitary Business Group Defined (IITA Section 1501)
100.9710 Financial Organizations (IITA Section 1501)
100.9715 Transportation Companies (IITA Section 304(d))
100.9720 Nexus
100.9730 Investment Partnerships (IITA Section 1501(a)(11.5))
100.9750 Corporation, Subchapter S Corporation, Partnership and Trust Defined (IITA Section 1501)

SUBPART FF: LETTER RULING PROCEDURES

Section
100.9800 Letter Ruling Procedures

SUBPART GG: MISCELLANEOUS

Section
100.9900 Tax Shelter Voluntary Compliance Program
100.9910 State Tax Preparer Oversight Act [35 ILCS 35]

100.APPENDIX A Business Income Of Persons Other Than Residents (Repealed)
100.TABLE A Example of Unitary Business Apportionment (Repealed)
100.TABLE B Example of Unitary Business Apportionment for Groups Which Include Members Using Three-Factor and Single-Factor Formulas (Repealed)

AUTHORITY: Implementing the Illinois Income Tax Act [35 ILCS 5] and authorized by Section 1401 of the Illinois Income Tax Act [35 ILCS 5/1401].

DEPARTMENT OF REVENUE

NOTICE OF PROPOSED AMENDMENTS

SOURCE: Filed July 14, 1971, effective July 24, 1971; amended at 2 Ill. Reg. 49, p. 84, effective November 29, 1978; amended at 5 Ill. Reg. 813, effective January 7, 1981; amended at 5 Ill. Reg. 4617, effective April 14, 1981; amended at 5 Ill. Reg. 4624, effective April 14, 1981; amended at 5 Ill. Reg. 5537, effective May 7, 1981; amended at 5 Ill. Reg. 5705, effective May 20, 1981; amended at 5 Ill. Reg. 5883, effective May 20, 1981; amended at 5 Ill. Reg. 6843, effective June 16, 1981; amended at 5 Ill. Reg. 13244, effective November 13, 1981; amended at 5 Ill. Reg. 13724, effective November 30, 1981; amended at 6 Ill. Reg. 579, effective December 29, 1981; amended at 6 Ill. Reg. 9701, effective July 26, 1982; amended at 7 Ill. Reg. 399, effective December 28, 1982; amended at 8 Ill. Reg. 6184, effective April 24, 1984; codified at 8 Ill. Reg. 19574; amended at 9 Ill. Reg. 16986, effective October 21, 1985; amended at 9 Ill. Reg. 685, effective December 31, 1985; amended at 10 Ill. Reg. 7913, effective April 28, 1986; amended at 10 Ill. Reg. 19512, effective November 3, 1986; amended at 10 Ill. Reg. 21941, effective December 15, 1986; amended at 11 Ill. Reg. 831, effective December 24, 1986; amended at 11 Ill. Reg. 2450, effective January 20, 1987; amended at 11 Ill. Reg. 12410, effective July 8, 1987; amended at 11 Ill. Reg. 17782, effective October 16, 1987; amended at 12 Ill. Reg. 4865, effective February 25, 1988; amended at 12 Ill. Reg. 6748, effective March 25, 1988; amended at 12 Ill. Reg. 11766, effective July 1, 1988; amended at 12 Ill. Reg. 14307, effective August 29, 1988; amended at 13 Ill. Reg. 8917, effective May 30, 1989; amended at 13 Ill. Reg. 10952, effective June 26, 1989; amended at 14 Ill. Reg. 4558, effective March 8, 1990; amended at 14 Ill. Reg. 6810, effective April 19, 1990; amended at 14 Ill. Reg. 10082, effective June 7, 1990; amended at 14 Ill. Reg. 16012, effective September 17, 1990; emergency amendment at 17 Ill. Reg. 473, effective December 22, 1992, for a maximum of 150 days; amended at 17 Ill. Reg. 8869, effective June 2, 1993; amended at 17 Ill. Reg. 13776, effective August 9, 1993; recodified at 17 Ill. Reg. 14189; amended at 17 Ill. Reg. 19632, effective November 1, 1993; amended at 17 Ill. Reg. 19966, effective November 9, 1993; amended at 18 Ill. Reg. 1510, effective January 13, 1994; amended at 18 Ill. Reg. 2494, effective January 28, 1994; amended at 18 Ill. Reg. 7768, effective May 4, 1994; amended at 19 Ill. Reg. 1839, effective February 6, 1995; amended at 19 Ill. Reg. 5824, effective March 31, 1995; emergency amendment at 20 Ill. Reg. 1616, effective January 9, 1996, for a maximum of 150 days; amended at 20 Ill. Reg. 6981, effective May 7, 1996; amended at 20 Ill. Reg. 10706, effective July 29, 1996; amended at 20 Ill. Reg. 13365, effective September 27, 1996; amended at 20 Ill. Reg. 14617, effective October 29, 1996; amended at 21 Ill. Reg. 958, effective January 6, 1997; emergency amendment at 21 Ill. Reg. 2969, effective February 24, 1997, for a maximum of 150 days; emergency expired July 24, 1997; amended at 22 Ill. Reg. 2234, effective January 9, 1998; amended at 22 Ill. Reg. 19033, effective October 1, 1998; amended at 22 Ill. Reg. 21623, effective December 15, 1998; amended at 23 Ill. Reg. 3808, effective March 11, 1999; amended at 24 Ill. Reg. 10593, effective July 7, 2000; amended at 24 Ill. Reg. 12068, effective July 26, 2000; emergency amendment at 24 Ill. Reg. 17585, effective November 17, 2000, for a maximum of 150 days; amended at 24 Ill. Reg. 18731, effective December 11, 2000; amended at

25 Ill. Reg. 4640, effective March 15, 2001; amended at 25 Ill. Reg. 4929, effective March 23, 2001; amended at 25 Ill. Reg. 5374, effective April 2, 2001; amended at 25 Ill. Reg. 6687, effective May 9, 2001; amended at 25 Ill. Reg. 7250, effective May 25, 2001; amended at 25 Ill. Reg. 8333, effective June 22, 2001; amended at 26 Ill. Reg. 192, effective December 20, 2001; amended at 26 Ill. Reg. 1274, effective January 15, 2002; amended at 26 Ill. Reg. 9854, effective June 20, 2002; amended at 26 Ill. Reg. 13237, effective August 23, 2002; amended at 26 Ill. Reg. 15304, effective October 9, 2002; amended at 26 Ill. Reg. 17250, effective November 18, 2002; amended at 27 Ill. Reg. 13536, effective July 28, 2003; amended at 27 Ill. Reg. 18225, effective November 17, 2003; emergency amendment at 27 Ill. Reg. 18464, effective November 20, 2003, for a maximum of 150 days; emergency expired April 17, 2004; amended at 28 Ill. Reg. 1378, effective January 12, 2004; amended at 28 Ill. Reg. 5694, effective March 17, 2004; amended at 28 Ill. Reg. 7125, effective April 29, 2004; amended at 28 Ill. Reg. 8881, effective June 11, 2004; emergency amendment at 28 Ill. Reg. 14271, effective October 18, 2004, for a maximum of 150 days; amended at 28 Ill. Reg. 14868, effective October 26, 2004; emergency amendment at 28 Ill. Reg. 15858, effective November 29, 2004, for a maximum of 150 days; amended at 29 Ill. Reg. 2420, effective January 28, 2005; amended at 29 Ill. Reg. 6986, effective April 26, 2005; amended at 29 Ill. Reg. 13211, effective August 15, 2005; amended at 29 Ill. Reg. 20516, effective December 2, 2005; amended at 30 Ill. Reg. 6389, effective March 30, 2006; amended at 30 Ill. Reg. 10473, effective May 23, 2006; amended by 30 Ill. Reg. 13890, effective August 1, 2006; amended at 30 Ill. Reg. 18739, effective November 20, 2006; amended at 31 Ill. Reg. 16240, effective November 26, 2007; amended at 32 Ill. Reg. 872, effective January 7, 2008; amended at 32 Ill. Reg. 1407, effective January 17, 2008; amended at 32 Ill. Reg. 3400, effective February 25, 2008; amended at 32 Ill. Reg. 6055, effective March 25, 2008; amended at 32 Ill. Reg. 10170, effective June 30, 2008; amended at 32 Ill. Reg. 13223, effective July 24, 2008; amended at 32 Ill. Reg. 17492, effective October 24, 2008; amended at 33 Ill. Reg. 1195, effective December 31, 2008; amended at 33 Ill. Reg. 2306, effective January 23, 2009; amended at 33 Ill. Reg. 14168, effective September 28, 2009; amended at 33 Ill. Reg. 15044, effective October 26, 2009; amended at 34 Ill. Reg. 550, effective December 22, 2009; amended at 34 Ill. Reg. 3886, effective March 12, 2010; amended at 34 Ill. Reg. 12891, effective August 19, 2010; amended at 35 Ill. Reg. 4223, effective February 25, 2011; amended at 35 Ill. Reg. 15092, effective August 24, 2011; amended at 36 Ill. Reg. 2363, effective January 25, 2012; amended at 36 Ill. Reg. 9247, effective June 5, 2012; amended at 37 Ill. Reg. 5823, effective April 19, 2013; amended at 37 Ill. Reg. 20751, effective December 13, 2013; recodified at 38 Ill. Reg. 4527; amended at 38 Ill. Reg. 9550, effective April 21, 2014; amended at 38 Ill. Reg. 13941, effective June 19, 2014; amended at 38 Ill. Reg. 15994, effective July 9, 2014; amended at 38 Ill. Reg. 17043, effective July 23, 2014; amended at 38 Ill. Reg. 18568, effective August 20, 2014; amended at 38 Ill. Reg. 23158, effective November 21, 2014; emergency amendment at 39 Ill. Reg. 483, effective December 23, 2014, for a maximum of 150 days; amended at 39 Ill. Reg. 1768, effective January 7, 2015; amended at 39 Ill. Reg. 5057, effective March 17, 2015;

amended at 39 Ill. Reg. 6884, effective April 29, 2015; amended at 39 Ill. Reg. 15594, effective November 18, 2015; amended at 40 Ill. Reg. 1848, effective January 5, 2016; amended at 40 Ill. Reg. 10925, effective July 29, 2016; amended at 40 Ill. Reg. 13432, effective September 7, 2016; amended at 40 Ill. Reg. 14762, effective October 12, 2016; amended at 40 Ill. Reg. 15575, effective November 2, 2016; amended at 41 Ill. Reg. 4193, effective March 27, 2017; amended at 41 Ill. Reg. 6379, effective May 22, 2017; amended at 41 Ill. Reg. 10662, effective August 3, 2017; amended at 41 Ill. Reg. 12608, effective September 21, 2017; amended at 41 Ill. Reg. 14217, effective November 7, 2017; emergency amendment at 41 Ill. Reg. 15097, effective November 30, 2017, for a maximum of 150 days; amended at 42 Ill. Reg. 4953, effective February 28, 2018; amended at 42 Ill. Reg. 6451, effective March 21, 2018; recodified Subpart H to Subpart G at 42 Ill. Reg. 7980; amended at 42 Ill. Reg. 17582, effective September 24, 2018; amended at 42 Ill. Reg. 19190, effective October 12, 2018; amended at 43 Ill. Reg. _____, effective _____.

SUBPART M: BUSINESS INCOME OF PERSONS OTHER THAN RESIDENTS

Section 100.3370 Sales Factor (IITA Section 304)

a) In General~~general.~~

1) IITA Section 1501(a)(21) defines the term "sales" to mean all gross receipts of the person not allocated under IITA Sections 301, 302 and 303. Thus, for the purposes of the sales factor of the apportionment formula for each trade or business of the person, the term "sales" means all gross receipts derived by the person from transactions and activity in the regular course of his or her trade or business. The following are rules for determining "sales" in various situations, except in instances in which an alternative method of determining the sales factor is prescribed in Section 100.3380. If the determination prescribed by this Section~~section~~ does not clearly reflect the taxpayer's business activities in Illinois (for taxable years ending before December 31, 2008) or the market for the taxpayer's goods, services or other sources of income in Illinois (for taxable years ending on or after December 31, 2008), the taxpayer may request the use of an alternative method of apportionment under Section 100.3390.

A) In the case of a person engaged in manufacturing and selling or purchasing and reselling goods or products, "sales" includes all gross receipts from the sales of those goods or products (or other property of a kind that~~which~~ would properly be included in the

inventory of the person if on hand at the close of the tax period) held by the person primarily for sale to customers in the ordinary course of its trade or business. Gross receipts for this purpose means gross sales less returns and allowances, and includes all interest income, service charges, carrying charges, or time-price differential charges attendant to those sales. Federal and State~~state~~ excise taxes (including sales taxes) shall be included as part of the receipts if the taxes are passed on to the buyer or included as part of the selling price of the product.

B) In the case of cost plus fixed fee contracts, such as the operation of a government-owned plant for a fee, "sales" includes the entire reimbursed cost, plus the fee.

C) In the case of a person engaged in providing services, such as the operation of an advertising agency, or the performance of equipment service contracts, or research and development contracts, "sales" includes the gross receipts from the performance of those services, including fees, commissions and similar items.

D) In the case of a person engaged in renting real or tangible property, "sales" includes the gross receipts from the rental, lease or licensing of the use of the property.

E) In the case of a person engaged in the sale, assignment or licensing of intangible personal property such as patents and copyrights, "sales" includes the gross receipts therefrom.

F) If a person derives receipts from the sale of equipment used in its business, those receipts constitute "sales". For example, a truck express company owns a fleet of trucks and sells its trucks under a regular replacement program. The gross receipts from the sales of the trucks are included in the sales factor.

2) The following gross receipts are not included in the sales factor:

A) For taxable years ending on or after December 31, 1995, *dividends; amounts included under IRC section~~26 USC~~ 78; and Subpart F income* are excluded from the sales factor under IITA

Section 304(a)(3)(D).

B) Gross receipts that are excluded from or deducted in the computation of federal taxable income or federal adjusted gross income, and that are not added back in the computation of base income. For example, in years ending prior to December 31, 1995, dividends received from a domestic corporation are excluded from the sales factor to the extent the taxpayer is allowed a deduction under IRC section~~26 USC~~ 243 with respect to those dividends.

C) Gross receipts that are subtracted from federal taxable income or federal adjusted gross income in the computation of base income or that are eliminated in the computation of taxable income in the case of a unitary business group under Section 100.5270(b)(1). Examples of gross receipts excluded from the sales factor under this provision include:

i) Interest on federal obligations subtracted under IITA Section 203(a)(2)(N), (b)(2)(J), (c)(2)(K) or (d)(2)(G).

ii) For taxable years ending prior to December 31, 1995, dividends included in federal taxable income or federal adjusted gross income are excluded from the sales factor if eliminated in combination or to the extent subtracted under IITA Section 203(a)(2)(J), (a)(2)(K), (b)(2)(K), (b)(2)(L), (b)(2)(O), (c)(2)(M), (c)(2)(O), (d)(2)(K) or (d)(2)(M).

D) Gross receipts that are excluded from or deducted in the computation of federal taxable income or federal adjusted gross income, but are added back in the computation of base income, are included in the sales factor unless subtracted or eliminated in combination. For example:

i) Interest on State~~state~~ obligations excluded from federal taxable income or adjusted gross income under IRC section~~26 USC~~ 103 and added back in the computation of base income under IITA Section 203(a)(2)(A), (b)(2)(A), (c)(2)(A) or (d)(2)(A) is included in the sales factor except in the case of interest on certain Illinois obligations that is

exempt from Illinois Income Tax. (See 86 Ill. Adm. Code 100.2470(f).)

ii) Gross receipts from intercompany transactions between two corporate members of a federal consolidated group, the taxable income on which is deferred under 26 CFR 1.1502-13, will be included in the sales factor of the recipient unless subtracted under a provision of IITA Section 203 or eliminated in combination of the two corporations as members of a unitary business group.

E) In some cases certain gross receipts should be disregarded in determining the sales factor in order that the apportionment formula will operate fairly to apportion to this State the income of the person's trade or business. (See 86 Ill. Adm. Code 100.3380(c).)

F) For taxable years ending on or after December 31, 1999, *gross receipts from the licensing, sale, or other disposition of a patent, copyright, trademark, or similar item of intangible personal property may be included in the sales factor only if gross receipts from licenses, sales, or other dispositions of these items comprise more than 50% of the taxpayer's total gross receipts included in gross income during the tax year and during each of the 2 immediately preceding tax years; provided that, when a taxpayer is a member of a unitary business group, the determination shall be made on the basis of the gross receipts of the entire unitary business group*. (IITA Section 304(a)(3)(B-2)) For purposes of this Section:

i) "Gross receipts from the licensing, sale, or other disposition of a patent, copyright, trademark, or similar item of intangible personal property" includes~~include~~ amounts received as damages or settlements from claims of infringement.

ii) "Gross receipts from the licensing, sale, or other disposition of a patent" includes~~include~~ only amounts received from a person using the patent in the production, fabrication,

manufacturing, or other processing of a product or from a person producing, fabricating or manufacturing a product subject to the patent.

iii) "Gross receipts from the licensing, sale, or other disposition of a copyright" includes~~include~~ only amounts received by the taxpayer from a person engaged in printing or other publication of the material protected by the copyright, which are governed by Section 100.3373. The term does not include gross receipts from broadcasting within the meaning of IITA Section 304(a)(3)(B-7) or from publishing or advertising within the meaning of IITA Section 304(a)(3)(C-5)(iv).

iv) If a taxpayer has been in existence less than three taxable years, its gross receipts from the licensing, sale, or other disposition of patents, copyrights, trademarks or similar items of intangible personal property will be included in its sales factor if those gross receipts comprise more than 50% of its total gross receipts during each taxable year of its existence.

v) "Patent" means a patent issued under 35 USC 151.

vi) "Copyright" means a copyright registered or eligible for registration under 17 USC 408.

vii) "Trademark" means a trademark registered or eligible for registration under 15 USC 1051.

viii) A "similar item" means an item of intellectual property that is registered or otherwise enforceable under a law equivalent to 35 USC 151, 17 USC 408 or 15 USC 1051 or that is otherwise recognized in the country under whose law the sale or license agreement would be enforced, or under which an infringement claim would be brought.

ix) In the case of a unitary business group, the total gross receipts and gross receipts from the licensing, sale or other

disposition of a patent, copyright, trademark or similar item of intangible personal property in the two years immediately preceding the tax year include the gross receipts and gross receipts from the licensing, sale or other disposition of a patent, copyright, trademark or similar item of intangible personal property of all persons who are members of the unitary business group at some time during the taxable year, whether or not those persons were also members of the unitary business group in a preceding tax year, and only of those persons.

3) In filing returns with this State, if the person departs from or modifies the basis for excluding or including gross receipts in the sales factor used in returns for prior years, the person shall disclose in the return for the current year the nature and extent of the modification. If the returns or reports filed by the person with all states to which the person reports under Article IV of the Multistate Tax Compact or the Uniform Division of Income for Tax Purposes Act are not uniform in the inclusion or exclusion of gross receipts, the person shall disclose in its return to this State the nature and extent of the variance.

4) For taxable years ending prior to December 31, 2008, sales of electricity are sales other than sales of tangible personal property sourced under IITA Section 304(a)(3)(C). For taxable years ending on or after December 31, 2008~~,~~ and prior to July 16, 2009, sales of electricity are sales of service sourced under IITA Section 304(a)(3)(C-5)(iv). For taxable years ending after July 15, 2009, sales of electricity are sales of tangible personal property sourced under IITA Section 304(a)(3)(B). (See Exelon Corp. v. Department of Revenue, 234 Ill 2d 266 (2009).)

b) Denominator. The denominator of the sales factor shall include the total gross receipts derived by the person from transactions and activity in the regular course of its trade or business, except receipts excluded under 86 Ill. Adm. Code 100.3380(c).

c) Numerator. The numerator of the sales factor shall include the gross receipts attributable to this State and derived by the person from transactions and activity in the regular course of its trade or business. All interest income, service charges, carrying charges, or time-price differential charges incidental to those gross

receipts shall be included regardless of the place where the accounting records are maintained or the location of the contract or other evidence of indebtedness.

1) Sales of Tangible Personal Property in this State

A) Gross receipts from the sales of tangible personal property (except sales to the United States Government) (see subsection (c)(2)) are in this State:

i) if the property is delivered or shipped to a purchaser within this State regardless of the f.o.b. (free on board) point or other conditions of sale; or

ii) if the property is shipped from an office, store, warehouse, factory or other place of storage in this State and the taxpayer is not taxable in the state of the purchaser. However, premises owned or leased by a person who has independently contracted with the taxpayer for the printing of newspapers, periodicals or books shall not be deemed to be an office, store, warehouse, factory or other place of storage.

B) Property shall be deemed to be delivered or shipped to a purchaser within this State if the recipient is located in this State, even though the property is ordered from outside this State.

EXAMPLE: A corporation, with inventory in State A, sold $100,000 of its products to a purchaser having branch stores in several states including this State. The order for the purchase was placed by the purchaser's central purchasing department located in State B. $25,000 of the purchase order was shipped directly to purchaser's branch store in this State. The branch store in this State is the "purchaser within this State" with respect to $25,000 of the corporation's sales.

C) Property is delivered or shipped to a purchaser within this State if the shipment terminates in this State, even though the property is subsequently transferred by the purchaser to another state.

EXAMPLE: A corporation makes a sale to a purchaser who maintains a central warehouse in this State at which all merchandise purchases are received. The purchaser reships the goods to its branch stores in other states for sale. All of the corporation's products shipped to the purchaser's warehouse in this State is property "delivered or shipped to a purchaser within this State".

D) The term "purchaser within this State" shall include the ultimate recipient of the property if the person in this State, at the designation of the purchaser, delivers to or has the property shipped to the ultimate recipient within this State.

EXAMPLE: A corporation in this State sold merchandise to a purchaser in State A. The corporation directed the manufacturer or supplier of the merchandise in State B to ship the merchandise to the purchaser's customer in this State pursuant to purchaser's instructions. The sale by the corporation is "in this State".

E) When property being shipped by a seller from the state of origin to a consignee in another state is diverted while en route to a purchaser in this State, the sales are in this State.

EXAMPLE: Corporation X, a produce grower in State A, begins shipment of perishable produce to the purchaser's place of business in State B. While en route the produce is diverted to the purchaser's place of business in this State in which state Corporation X is subject to tax. The sale by the corporation is attributed to this State.

F) If the person is not taxable in the state of the purchaser, the sale is attributed to this State if the property is shipped from an office, store, warehouse, factory, or other place of storage in this State (subject to the exception noted in (c)(1)(A)(ii)).

EXAMPLE: A corporation has its head office and factory in State A. It maintains a branch office and inventory in this State. The corporation's only activity in State B is the solicitation of orders by a resident salesman. All orders by the State B salesman are sent to

the branch office in this State for approval and are filled by shipment from the inventory in this State. Since the corporation is immune under Public Law 86-272 from tax in State B, all sales of merchandise to purchasers in State B are attributed to this State, the state from which the merchandise was shipped.

2) Sales of tangible personal property to the United States Government in this State. Gross receipts from the sales of tangible personal property to the United States Government are in this State if the property is shipped from an office, store, warehouse, factory, or other place of storage in this State. For the purposes of this regulation, only sales for which the United States Government makes direct payment to the seller pursuant to the terms of the contract constitute sales to the United States Government. Thus, as a general rule, sales by a subcontractor to the prime contractor, the party to the contract with the United States Government, do not constitute sales to the United States Government.

~~A)~~EXAMPLE A: A corporation contracts with General Services Administration to deliver X number of trucks which were paid for by the United States Government. The sale is a sale to the United States Government.

~~B)~~EXAMPLE B: A corporation as a subcontractor to a prime contractor with the National Aeronautics and Space Administration contracts to build a component of a rocket for $1,000,000. The sale by the subcontractor to the prime contractor is not a sale to the United States Government.

3) For taxable years ending on or after December 31, 1999, *gross receipts from the licensing, sale, or other disposition of a patent, copyright, trademark, or similar item of intangible personal property* that are not excluded from the sales factor under subsection (a)(2)(F) are included in the numerator of the sales factor *to the extent the item is utilized in this State during the year the gross receipts are included in gross income*. (IITA Section 304(a)(3)(B-1)) For purposes of this subsection (c)(3):

A) *A patent is utilized in a state to the extent that it is employed in production, fabrication, manufacturing, or other processing in the state or to the extent that a patented product is produced in the state. If a patent is utilized in more than one state, the extent to*

which it is utilized in any one state shall be a fraction equal to the gross receipts of the licensee or purchaser from sales or leases of items produced, fabricated, manufactured, or processed within that state using the patent and of patented items produced within that state, divided by the total of the gross receipts for all states in which the patent is utilized. (IITA Section 304(a)(3)(B-1)(ii)(I))

B) *A copyright is utilized in a state to the extent that printing or other publication originates in the state*. Printing or other publication originates at the place at which the licensee of the copyright incorporates the copyrighted material into the physical medium by which it will be delivered to the purchaser of the material or, if the copyrighted material is delivered to the purchaser without use of a physical medium, the place at which delivery of the copyrighted material to the person purchasing the material from the licensee originates. *If a copyright is utilized in more than one state, the extent to which it is utilized in any one state shall be a fraction equal to the gross receipts from sales or licenses of materials printed or published in that state divided by the total of the gross receipts for all states in which the copyright is utilized.* (IITA Section 304(a)(3)(B-1)(ii)(II))

C) *Trademarks and other items of intangible personal property governed by this subsection (c)(3) are utilized in the state in which the commercial domicile of the licensee or purchaser is located.* (IITA Section 304(a)(3)(B-1)(ii)(III))

D) If the place of utilization of an item of property under subsection (c)(3)(A), (B) or (C) *cannot be determined from the taxpayer's books and records or from the books and records of any person related to the taxpayer within the meaning of IRC section~~26 USC~~ 267(b), the gross receipts attributable to that item shall be excluded from both the numerator and the denominator of the sales factor.* (IITA Section 304(a)(3)(B-1)(iii))

4) *For taxable years ending on or after December 31, 2013, gross receipts from winnings under the Illinois Lottery Law* [20 ILCS 1605] *and from the assignment of a prize under Section 13-1 of the Illinois Lottery Law are received in this State.* (IITA Section 304(a)(3)(B-8))

5) For taxable years ending prior to December 31, 2008, gross receipts from transactions not governed by the provisions of subsection (c)(1), (2), (3) or (4) and, for taxable years ending on or after December 31, 2008, from transactions involving intangible personal property when the taxpayer is not a dealer with respect to the intangible personal property, are attributed to this State if the income producing activity that gave rise to the receipts is performed wholly within this State. Also, gross receipts are attributed to this State if, with respect to a particular item of income, the income producing activity is performed in this State, based on costs of performance.

A) Income Producing Activity Defined. The term "income producing activity" applies to each separate item of income and means the transactions and activity directly engaged in by the person in the regular course of its trade or business for the ultimate purpose of obtaining gains or profit. Income producing activity does not include transactions and activities performed on behalf of a person, such as those conducted on its behalf by an independent contractor. The mere holding of intangible personal property is not, of itself, an income producing activity. Accordingly, the income producing activity includes but is not limited to the following:

i) The rendering of personal services by employees or the utilization of tangible and intangible property by the person in performing a service.

ii) The sale, rental, leasing, licensing or other use of real property.

iii) The rental, leasing, licensing or other use of tangible personal property.

iv) The sale, licensing or other use of intangible personal property.

B) Costs of Performance Defined. The term "costs of performance" means direct costs determined in a manner consistent with generally accepted accounting principles and in accordance with

accepted conditions or practices in the trade or business of the person.

C) Application. Receipts sourced under this subsection (c)(5) in respect to a particular income producing activity are in this State if:

i) the income producing activity is performed wholly within this State; or

ii) the income producing activity is performed both in and outside this State and, based on costs of performance, a greater proportion of the income producing activity is performed in this State than without this State (for taxable years ending prior to December 31, 2008) or a greater proportion of the income-producing activity of the taxpayer is performed within this State than in any other state (for taxable years ending on or after December 31, 2008).

D) Special Rules. The following are special rules for determining when receipts from the income producing activities described below are in this State.

i) Gross receipts from the sale, lease, rental or licensing of real property are in this State if the real property is located in this State.

ii) Gross receipts from the rental, lease, or licensing of tangible personal property are in this State if the property is located in this State. The principal cost of performance in a rental, leasing or licensing transaction is the depreciation or amortization of the tangible personal property, and the depreciation or amortization expense is incurred in the state in which the tangible personal property is located. The rental, lease, licensing or other use of tangible personal property in this State is a separate income producing activity from the rental, lease, licensing or other use of the same property while located in another state; consequently, if property is within and without this State during the rental, lease or licensing period, gross receipts

attributable to this State shall be measured by the ratio which the time the property was physically present or was used in this State bears to the total time or use of the property everywhere during that period.

EXAMPLE: Corporation X is the owner of 10 railroad cars. During the year, the total of the days each railroad car was present in this State was 50 days. The receipts attributable to the use of each of the railroad cars in this State are a separate item of income. Total receipts attributable to this State shall be determined as follows:

(10 x 50)/3650 x Total Receipts

iii) Gross receipts for the performance of personal services are attributable to this State to the extent those services are performed partly within and partly without this State, the gross receipts for the performance of those services shall be attributable to this State only if a greater portion of the services were performed in this State, based on costs of performance. Where services are performed partly within and partly without this State and the services performed in each state constitute a separate income producing activity, the gross receipts for the performance of services attributable to this State shall be measured by the ratio that the time spent in performing the services in this State bears to the total time spent in performing the services everywhere. Time spent in performing services includes the amount of time expended in the performance of a contract or other obligation that gives rise to the gross receipts. Personal service not directly connected with the performance of the contract or other obligation, as for example, time expended in negotiating the contract, is excluded from the computations.

EXAMPLE 1: Corporation X, a road show, gave theatrical performances at various locations in State X and in this State during the tax period. All gross receipts from performances given in this State are attributed to this State.

EXAMPLE 2: A public opinion survey corporation conducted a poll by its employees in State X and in this State for the sum of $9,000. The project required 600 man hours to obtain the basic data and prepare the survey report. Two hundred of the 600 man hours were expended in this State. The receipts attributable to this State are $3,000, calculated as follows:

200/600 x $9,000

6) For taxable years ending on or after December 31, 2008, gross receipts from transactions not governed by the provisions of subsection (c)(1), (2), (3) or (4) *are in this State if any of the following criteria are met*:

A) *Sales from the sale or lease of real property are in this State if the property is located in this State.* (IITA Section 304(a)(3)(C-5)(i))

B) *Sales from the lease or rental of tangible personal property are in this State if the property is located in this State during the rental period. Sales from the lease or rental of tangible personal property that is characteristically moving property, including, but not limited to, motor vehicles, rolling stock, aircraft, vessels, or mobile equipment, are in this State to the extent that the property is used in this State.* (IITA Section 304(a)(3)(C-5)(ii))

C) *In the case of interest, net gains (but not less than zero) and other items of income from intangible personal property, the sale is in this State if:*

i) *in the case of a taxpayer who:*

- *is a dealer in the item of intangible personal property within the meaning of IRC section~~26 USC~~ 475, the income or gain is received from a customer in this State.* A taxpayer is a dealer with respect to an item of intangible personal property if the taxpayer is a dealer with respect to the item under IRC section~~26 USC~~ 475(c)(1), or would be a dealer

with respect to the item under IRC section~~26 USC~~ 475(c)(1) if the item were a security as defined under IRC section~~26 USC~~ 475(c)(2). *For purposes of this subsection (c)(6)(C)(i), a customer is in this State if the customer is an individual, trust or estate who is a resident of this State and, for all other customers, if the customer's commercial domicile is in this State. Unless the dealer has actual knowledge of the residence or commercial domicile of a customer during a taxable year, the customer shall be deemed to be a customer in this State if the billing address of the customer, as shown in the records of the dealer, is in this State.* A dealer shall treat the person with whom it engages in a transaction as the customer, even when that person is acting on behalf of a third party, unless the dealer has actual knowledge of the party on whose behalf the person is acting. If a taxpayer is a dealer with respect to an item of intangible personal property and recognizes gain or loss with respect to that item other than in connection with a transaction with a customer (for example, unrealized gain or loss from marking the item to market under IRC section~~26 USC~~ 475), that gain or loss shall be excluded from the numerator and denominator of the sales factor (IITA Section 304(a)(3)(C-5)(iii)(a)) or

- is not a dealer with *respect* to the item of *intangible* personal property, *if the income-producing activity of the taxpayer is performed in this State or, if the income-producing activity of the taxpayer is performed both within and without this State, if a greater proportion of the income-producing activity of the taxpayer is performed within this State than in any other state, based on performance costs.* (IITA Section 304(a)(3)(C-5)(iii)(b)) (See subsection (c)(5) of this Section.)

ii) For purposes of this subsection (c)(6)(C), an item of "intangible personal property" includes only an item that can ordinarily be resold or otherwise reconveyed by the person acquiring the item from the taxpayer, and does not include any obligation of the taxpayer to make any payment, perform any act, or otherwise provide anything of value to another person.

EXAMPLE 1: ~~.~~ A ticket to attend a sporting event would not be an item of intangible personal property for the owner of the stadium who issues the ticket and is obliged to grant admission to the holder of the ticket. Rather, the sale of the ticket is a prepayment for a service to be provided. However, the ticket would be an item of intangible personal property in the hands of the original purchaser or any subsequent purchaser of the ticket, and a ticket broker engaged in the business of buying and reselling tickets would be a dealer with respect to the ticket.

EXAMPLE 2: ~~.~~ A taxpayer selling canned computer software is selling intangible personal property. (First National Bank of Springfield v. Dept. of Revenue, 85 Ill.2d 84 (1981)) If the taxpayer sells software to customers in the ordinary course of its business, it is a dealer with respect to those sales. In contrast, a taxpayer providing programming or maintenance services to its customers is selling services rather than intangible personal property.

EXAMPLE 3: ~~.~~ A taxpayer administers a "rewards program" for a group of unrelated businesses. Under the program, a customer of one business can earn discounts or rebates on products and services provided by any of the businesses. As each customer earns rewards, measured in "units", from one of the businesses, that business pays a specified amount per unit to the taxpayer. When a customer uses units earned in the program to purchase products or services at a discount from a participating business, the taxpayer pays that business a specified amount per unit used by the customer. Rebates may be paid to the customer

directly by the taxpayer or by one of the businesses, which is then reimbursed by the taxpayer. To the extent payments made to the taxpayer by businesses awarding units exceed the payments the taxpayer must make for discounts and rebates, the excess is payment for operating the program. The units awarded are obligations of the taxpayer to make payments to the business providing products or services at a discount or to pay rebates. Accordingly, payments received by taxpayer from the participating businesses for units awarded are not income from sales of intangible personal property by the taxpayer.

D) *Sales of services are in this State if the services are received in this State.* (IITA Section 304(a)(3)(C-5)(iv))

i) General Rule. Gross receipts from services are assigned to the numerator of the sales factor to the extent that the receipts may be attributed to services received in Illinois.

ii) A contract that involves the provision of a service by the taxpayer and the use of property of the taxpayer by the service recipient shall be treated as a sale of service unless the contract is properly treated as a lease of property under IRC section~~26 USC~~ 7701(e)(1), taking into account all relevant factors, including whether:

- the service recipient is in physical possession of the property;

- the service recipient controls the property;

- the service recipient has a significant economic or possessory interest in the property;

- the service provider does not bear any risk of substantially diminished receipts or substantially increased expenditures if there is nonperformance under the contract;

- the service provider does not use the property concurrently to provide significant services to entities unrelated to the service recipient; and

- the total contract price does not substantially exceed the rental value of the property for the contract period.

EXAMPLE: A taxpayer selling access to an online database or applications software, and who is required to perform regular update services to the database or software, retains control over the contents of the database or software, and provides access to the same database or software to multiple customers is not selling or licensing an item of intangible personal property to its customers, but rather is providing a service.

iii) Services received in this State include, but are not limited to:

- When the subject matter of the service is an item of tangible personal property, the service is received in this State if possession of the property is restored to the recipient of the service under the principles in subsection (c)(1) for determining whether a sale of that property is in this State.

  EXAMPLE 1: ~~.~~ A customer returns a computer to the manufacturer for repair. The manufacturer performs the repairs in Indiana and ships the computer to the customer's Illinois address. The service is received in this State.

  EXAMPLE 2: ~~.~~ Individual purchases clothing from Merchant at a store in this State, using a credit card issued by Bank A pursuant to a licensing agreement with Credit Card Company. Credit Card Company is not a financial organization required to apportion its business income under Section 100.3405. Bank

A remits the purchase price to Credit Card Company, which deposits the purchase price with Merchant's bank, minus a fee or discount. All fees and discounts earned by Credit Card Company in connection with this purchase are for services received in this State.

- When the subject matter of the service is an item of real property, the service is received in the state in which the real property is located.

  EXAMPLE 3: - Individual purchases a parcel of land in Illinois and constructs a house on the parcel. Services performed at an architect's office in Wisconsin regarding the design and construction of the house are received in this State.

- When the service is performed on or with respect to the person of an individual (for example, medical treatment services), the service is received in the state in which the individual is located at the time the service is performed.

- Services performed by a taxpayer that are directly connected to or in support of services received in this State are also services received in this State.

  EXAMPLE 4: - Individual purchases automobile repair services from Automobile Dealership at its facility located in this State, using a credit card issued by Bank A pursuant to a licensing agreement with Credit Card Company. Bank A remits the purchase price to Credit Card Company, which deposits the purchase price with Automobile Dealership's bank, minus a fee or discount. All fees and discounts earned by Credit Card Company in connection with this purchase are for services received in this State.

EXAMPLE 5: ~~.~~ Services performed by an investment fund on behalf of an investor are received in this State if the investor resides in this State (in the case of an individual) or has its ordering or billing address in this State (for other investors). In the case of services provided by Taxpayer to or on behalf of the investment fund that are directly connected with services provided separately to the investors, such as preparation of communications and statements to investors, and allocations of earnings and distributions to investors, the service is also received in this State to the extent the investors reside (or have their ordering or billing address) in this State. Accordingly, receipts of Taxpayer for these services are allocated to this State on the basis of the ratio of: the average of the outstanding shares in the fund owned by shareholders, partners or other investors residing (or having their ordering or billing address) within this State at the beginning and end of each taxable year of the taxpayer; and the average of the total number of outstanding shares in the fund at the beginning and end of each year. Residence or ordering or billing address of the shareholder, partner or other investor is determined by the mailing address in the records of the investment fund or the taxpayer. Services provided to an investment fund that are not directly connected to or in support of services provided separately to investors, such as brokerage services or investment advising, are not received by the customer at the location of its investors.

iv) Special Rules

- Under IITA Section 304(a)(3)(C-5)(iv), *if the state where the services are received is not readily determinable, the services shall be deemed to be received at the location of the office of the customer*

from which the services were ordered in the regular course of the customer's trade or business, or, if the ordering office cannot be determined, at the office of the customer to which the services are billed. If the service is provided to an individual who provides a residential address as the place from which the services are ordered or to which the services are billed, rather than an office address, the residential address shall be used. For purposes of this provision, the state where services are received is not readily determinable if the facts necessary to make the determination are not contained in the books and records of the taxpayer or any person related to the taxpayer within the meaning of IRC section~~26 USC~~ 267(b) or if the available facts would allow reasonable persons to reach different determinations of the state in which the services were received.

- Under IITA Section 304(a)(3)(C-5)(iv), *if the services are provided to a corporation, partnership, or trust and the services are received in a state in which the corporation, partnership, or trust does not maintain a fixed place of business* (as defined in Section 100.3405(b)(1)), *the services shall be deemed to be received at the location of the office of the customer from which the services were ordered in the regular course of the customer's trade or business, or, if the ordering office cannot be determined, at the office of the customer to which the services are billed*. For purposes of this provision, in the case of services performed by the taxpayer as a subcontractor or as an agent acting on behalf of a principal, if either the contractor or principal has a fixed place of business in the state in which the services are received or the customer of the contractor or principal either is an individual or has a fixed place of business in the state in which the services are received, the service will be treated

as received in a state in which the customer of the taxpayer has a fixed place of business.

- Under IITA Section 304(a)(3)(C-5)(iv), *if the taxpayer is not taxable in the state in which the services are received or deemed to be received, the gross receipts attributed to those services must be excluded from both the numerator and denominator of the sales factor*. (See Section 100.3200 for guidance on determining when a taxpayer is taxable in another state.)

(Source: Amended at 43 Ill. Reg. _____, effective _____)

Section 100.3380 Special Rules (IITA Section 304)

a) Determining Business Activity or Market Within Illinois

1) Petition
IITA Section 304(f) provides that *if the allocation and apportionment provisions of Section 304~~subsections~~(a) through (e) and ~~of subsection~~ (h) do not, for taxable years ending before December 31, 2008, fairly represent the extent of a person's business activity in this State, or do not, for taxable years ending on or after December 31, 2008, fairly represent the market for the person's goods, services, or other sources of business income, the person may petition for, or the Director may require, in respect of all or any part of the person's business activity, if reasonable:*

A) *Separate accounting;*

B) *The exclusion of any one or more factors;*

C) *The inclusion of one or more additional factors that~~which~~ will fairly represent the person's business activities or market in this State; or*

D) *The employment of any other method to effectuate an equitable allocation and apportionment of the person's business income.*

2) Director's Determination
The Director has determined that, in the instances described in this Section, the apportionment provisions provided in ~~subsections (a) through (e) and (h) of~~ IITA Section 304(a) through (e) and (h) do not fairly represent the extent of a person's business activity or market within Illinois. For tax years beginning on or after the effective date of a rulemaking amending this Section to prescribe a specific method of apportioning business income, all nonresident taxpayers are directed to apportion their business income employing that method in order to properly apportion their business income to Illinois. Taxpayers whose business activity or market within Illinois is not fairly represented by a method prescribed in this Section and who ~~do not~~ want to use another~~that~~ method for a tax year beginning after the effective date of the rulemaking adopting that method may obtain permission to use that other method by filing~~must file~~ a petition under Section 100.3390~~ requesting permission to use an alternative method of apportionment~~. For tax years beginning prior to the effective date of the rulemaking adopting a method of apportioning business income, the Department will not require a taxpayer to adopt that method; provided, however, if any taxpayer has used that method for any of those tax years, the taxpayer must continue to use that method for that tax year. Moreover, a taxpayer may file a petition under Section 100.3390 to use a method of apportionment prescribed in this Section for any open tax year beginning prior to the effective date of the rulemaking adopting that method, and that petition shall be granted in the absence of facts showing that that method will not fairly represent the extent of a person's business activity or market in Illinois.

b) Property Factor. The following special rules are established in respect to the property factor in IITA Section 304(a)(1):

1) If the subrents taken into account in determining the net annual rental rate under Section 100.3350(c) produce a negative or clearly inaccurate value for any item of property, another method that will properly reflect the value of rented property may be required by the Director or requested by the person. In no case, however, may~~shall~~ the value be less than an amount that bears the same ratio to the annual rental rate paid by the person for the property as the fair market value of that portion of the property used by the person bears to the total fair market value of the rented property.

EXAMPLE: A corporation rents a 10-story building at an annual rental rate of $1,000,000. The corporation occupies two stories and sublets eight stories for $1,000,000 a year. The net annual rental rate of the taxpayer is at least~~must not be less than~~ two-tenths of the corporation annual rental rate for the entire year, or $200,000.

2) If property owned by others is used by the person at no charge or rented by the person for a nominal rate, the net annual rental rate for the property is~~shall be~~ determined on the basis of a reasonable market rental rate for that property.

c) Sales Factor. The following special rules are established in respect to the sales factor in IITA Section 304(a)(3):

1) For taxable years ending ~~on or~~ before December 31, 2008, in the case of sales in which neither the origin nor the destination of the sale is within this State, and the person is taxable in neither the state of origin nor the state of destination, the sale is~~will be~~ attributed to this State (and included in the numerator of the sales factor) if the person's activities in this State in connection with the sales are not protected by the provisions of P.L. 86-272, 15 USC 381-385. Although P.L. 86-272, by its terms covers only sales of tangible personal property, its rules regarding a state's power to impose a net income tax, for purposes of this special rule, will be applied whether or not the sale is of tangible or intangible property. This subsection (c)(1) does~~shall~~ not apply in taxable years ending on or after December 31, 2008, because attributing the sale to this State is not required by IITA Section 304(a)(3) and does not *fairly represent the market for the person's goods, services, or other sources of business income* in this State. Notwithstanding the provisions of subsection (a)(2), taxpayers are not required to file a petition under Section 100.3390 requesting permission to file an original or amended return for any tax year ending on or after December 31, 2008 that does not apply the special rule in this subsection (c)(1).

EXAMPLE: A corporation's salesman operates out of an office in Illinois. He regularly calls on customers both within and without Illinois. Orders are approved by him and transmitted to the corporation's headquarters in State A. For taxable years ending before December 31, 2008, if~~If~~ the

property sold by the salesman is shipped from a state in which the corporation is not taxable to a purchaser in a state in which the corporation is not taxable, the sale is attributable to Illinois.

2) When gross receipts arise from an incidental or occasional sale of assets used in the regular course of the person's trade or business, those gross receipts are~~shall be~~ excluded from the sales factor. For example, gross receipts from the sale of a factory or plant are~~will be~~ excluded. Gross receipts from an incidental or occasional sale of stock in a subsidiary are~~will~~ also ~~be~~ excluded. Exclusion of these gross receipts from the sales factor is appropriate for several reasons, more than one of which may apply to a particular sale, including:

A) incidental or occasional sales are not made in the market for the person's goods, services or other ordinary sources of business income;

B) to the extent that gains realized on the sale of assets used in a taxpayer's business are comprised of recapture of depreciation deductions, the economic income of the taxpayer was understated in the years in which those deductions were taken. The recapture gains that reflect a correction of that understatement should be allocated using a method approximating the factors that were used in apportioning the deductions. If the business otherwise remains unchanged, including the gross receipts from the sale in the sales factor numerator of the state in which the assets were located would allocate a disproportionate amount of the recapture gains to that state compared to how the deductions being recaptured were allocated;

C) to the extent the gain on the sale is attributable to goodwill or similar intangibles representing the value of customer relationships, including the gross receipts from the sale in the sales factor does~~will~~ not reflect the market for the taxpayer's goods, services or other ordinary sources of business income to the extent the sourcing of the receipts from that sale differs from the sales factor computed without regard to that sale; and

D) in the case of sales of assets that are made in connection with a partial or complete withdrawal from the market in the state in which the assets are located, including the gross receipts from those sales in the sales factor would increase the business income apportioned to that state when the taxpayer's market in that state has decreased.

3) When the income producing activity relevant to the sourcing of business income from intangible personal property can be readily identified, that income is included in the denominator of the sales factor and, if the income producing activity occurs in this State, in the numerator of the sales factor as well. For example, with respect to taxable years ending before December 31, 2008, usually the income producing activity can be readily identified in respect to interest income received on deferred payments on sales of tangible property (see Section 100.3370(a)(1)(A)).

4) When business income from intangible property is sourced according to the income producing activity, and the income cannot readily be attributed to any income producing activity of the person, the income is not~~cannot be~~ assigned to the numerator of the sales factor for any state and is~~shall be~~ excluded from the denominator of the sales factor. The following provisions illustrate this concept:

A) Subpart F (IRC section~~26 USC~~ 951-964) income is passive income generated by the mere holding of an intangible. For taxable years ending on or after December 31, 1995, subpart F income is excluded from the sales factor under IITA Section 304(a)(3)(D). For prior taxable years, there is a rebuttable presumption that subpart F income is not includable in either the numerator or the denominator of the sales factor. If a taxpayer wishes to include subpart F income in either the numerator or the denominator of the sales factor, the burden of proof is on the taxpayer to identify the income producing activities and to situs those activities within a particular state, or

B) When business income in the form of dividends received on stock during taxable years ending before December 31, 1995, or interest received on bonds, debentures or government securities results from the mere holding of intangible personal property by the

person, those dividends and interest are~~shall be~~ excluded from the denominator of the sales factor.

5) In the case of sales in the regular course of business of intangibles (including, by means of example, without limitation, patents, copyrights, bonds, stocks and other securities), gross receipts are~~shall be~~ disregarded and only the net gain (loss) is~~shall be~~ included in the sales factor, provided that, for taxable years ending on or after December 31, 2008, only net gains may~~shall~~ be included in the sales factor for sales sourced under IITA Section 304(a)(3)(C-5)(iii).

EXAMPLE: In 1990, Corporation A, a calendar year taxpayer, sells stock with an adjusted basis of $98,000,000 for $100,000,000, realizing a federal net capital gain of $2,000,000. Only the net capital gain of $2,000,000 is reflected in A's sales factor for the taxable year ending December 31, 1990.

6) Hedging Transactions

A) A "hedging transaction" is a transaction entered into by a taxpayer in the normal course of business primarily to manage interest rate risk or the risk of price or currency fluctuations. (See IRC sections~~26 USC~~ 475(c)(3), 1221(b)(2)(A) and 1256(e)(2).) The purpose of the sales factor in IITA Section 304(a) is to apportion the business income of a taxpayer conducting an interstate business to this State based on this State's relative share of the marketplace for the goods and services sold by the taxpayer in the course of its business. Gains and losses on hedging transactions entered into to manage the risks associated with the acquisition of resources by a taxpayer (for example, price fluctuations in commodities consumed in the taxpayer's business) do not reflect the market for the taxpayer's goods and services and, therefore, should be excluded from the sales factor. Gains and losses on hedging transactions entered into to manage risks associated with the gross income the taxpayer expects from its sales of goods and services (for example, the effect of foreign currency fluctuations on the dollar amount of gross income the taxpayer will receive from sales to a particular foreign country) are best accounted for in the sales factor as adjustments to the gross receipts from the transactions

whose risks are being hedged. Gains and losses on hedging transactions that manage risks associated with both acquisitions and sales of the taxpayer (for example, electricity futures bought or sold by a taxpayer engaged in the business of buying and selling electrical power), or that otherwise cannot be associated with a particular transaction or class of transactions in the computation of the sales factor, should be excluded from the sales factor. Federal income tax law provides a framework for identifying gains and losses from hedging transactions to the transactions or class of transactions being hedged and for keeping records necessary to support the identifications. The federal practice should be followed for State purposes.

B) General Rule. Except as provided in subsection (c)(6)(C), any income, gain or loss from a transaction properly identified as a hedge under IRC section~~26 USC~~ 1221(b)(2)(A), 475(c)(3) or 1256(e)(2) is excluded from the numerator and denominator of the sales factor.

C) Special Rule. With respect to any hedging transaction described in subsection (c)(6)(B) as to which identification requirements of subsection (c)(6)(D) are satisfied, any income, gain or loss from the hedging transaction is~~shall be~~ included in the denominator of the sales factor if the gross receipts from the hedged item are included in the denominator. That income, gain or loss is~~shall be~~ included in the numerator of the sales factor if the gross receipts from the hedged item are included in the numerator of the sales factor, and are~~shall be~~ excluded from the numerator of the sales factor if the gross receipts from the hedged item are excluded from the numerator of the sales factor. If the hedging transaction relates to an identified group of hedged items, the income, gain or loss from the hedging transaction is included in the numerator of the sales factor in the same proportion that the gross receipts from the group of hedged items are included in the numerator of the sales factor.

D) Identification Required. The identification requirements of this subsection (c)(6)(D) are met if the taxpayer's books and records clearly identify a hedging transaction as managing risk relating to a

particular item or items of gross receipts, including anticipated items of gross receipts, that must be included in the sales factor. The identification requirements are met only if identification is~~must be~~ made at the time and in the manner required under IRC section~~26 USC~~ 475(c)(3), 26 CFR 1.1221-2(f) and (g), or 26 CFR 1.1256(e)-1 and the taxpayer's books and records include the information necessary to apply subsection (c)(6)(C).

E) This subsection (c)(6) does not apply to any hedging transaction that, for federal income tax purposes, is integrated with the hedged item, such as under 26 CFR 1.988-5 or 1.1275-6. In addition, for purposes of this subsection (c)(6):

i) a transaction entered into by one member of a federal consolidated group identified as a hedge against a risk of another member of the federal consolidated group under the "single-entity approach" in 26 CFR 1.1221-2(e)(1) is not a hedging transaction if the two members of the federal consolidated group are not members of the same unitary business group, because the transaction is not hedging against a risk faced by the taxpayer entering into the transaction; and

ii) a transaction entered into by one member of a unitary business group with another member of the unitary business group is not a hedging transaction, because the risk remains within the group, except in the case of a transaction identified under 26 CFR 1.1221-2(f) or (g) as a hedging transaction between two member of a unitary business group who are also members of a federal consolidated group that has made the "separate entity election" in 26 CFR 1.1221-2(e)(2) with regard to hedging transactions.

F) ~~EXAMPLES:~~ The provisions of this subsection (c)(6) may be illustrated by the following examples:

EXAMPLE 1: ~~i)~~Taxpayer expects that, during its next production cycle, it will need 10 tons of commodity Y for its interstate

manufacturing business. Commodity Y is a raw material used by Taxpayer in the manufacture of its inventory. In order to hedge against exposure to changes in the price of commodity Y, Taxpayer enters into a forward contract to purchase 10 tons of commodity Y. The forward contract is identified as a hedging transaction under IRC section 1221(b)(2)(A). Under subsection (c)(6)(B), any income, gain or loss recognized with respect to the forward contract is excluded from the numerator and denominator of the sales factor.

EXAMPLE 2: ~~ii)~~On January 1, 2008, Taxpayer owns 10 tons of commodity X, which it holds for sale in the ordinary course of business and expects to sell during its taxable year ending December 31, 2008. To hedge against price fluctuations in commodity X, on January 10, 2008, while Taxpayer still owns commodity X, it sells the equivalent of 10 tons of commodity X futures contracts on a futures exchange. Taxpayer expects to sell commodity X to customers in various states, including Illinois. The futures contract is identified as a hedging transaction under IRC section 1221(b)(2)(A), and Taxpayer properly identifies the futures contract as required under subsection (c)(6)(D) as hedging gross receipts from sales of commodity X. Under subsection (c)(6)(C), any gain or loss taken into account by Taxpayer during its taxable year with respect to the futures contract is included in the denominator of the sales factor, and is included in the numerator of the sales factor in the same proportion that gross receipts from actual sales of commodity X during the taxable year are included in the numerator of the sales factor. If a loss is recognized on the futures contract, the loss is treated as a reduction (but not below zero) of the gross receipts from the sale of commodity X in computing the sales factor.

EXAMPLE 3: ~~iii)~~Taxpayer is a corporation on the accrual method of accounting with the U.S. dollar as its functional currency. On January 1, 2008, Taxpayer acquires 1,500 British pounds (£) for $2,250 (£1 = $1.50). The acquisition of £1,500 is properly identified by Taxpayer as a hedging transaction under IRC section 1221(b)(2)(A). On February 5, 2008, when the spot rate is £1 = $1.55, Taxpayer purchases inventory from its supplier by paying

£1,500. Accordingly, Taxpayer recognizes $75 exchange gain for federal income tax purposes upon disposition of the British pounds. The $75 exchange gain is excluded from both the numerator and denominator of the sales factor under subsection (c)(6)(B).

EXAMPLE 4: ~~iv)~~Taxpayer is a calendar year corporation with the U.S. dollar as its functional currency. Based on past experience, Taxpayer anticipates making 2009 first quarter sales to customers in New Zealand of 100,000 New Zealand dollars (NZD). In order to hedge against currency fluctuations related to the anticipated first quarter sales, on December 31, 2008, Taxpayer enters into a forward contract to sell 100,000 NZD on March 31, 2009 for $48,000. The forward contract is identified as a hedging transaction under IRC section~~26 USC~~ 1221(b)(2)(A), and the Taxpayer properly identifies the transaction as hedging its anticipated New Zealand sales in accordance with subsection (c)(6)(D). During the first quarter of its 2009 taxable year, Taxpayer makes sales to its New Zealand customers of 90,000 NZD. Under IITA Section 304(a), gross receipts from its New Zealand sales are included in the denominator of the Taxpayer's sales factor and are excluded from the numerator of the sales factor. Under subsection (c)(6)(C), any gain or loss recognized on the forward contract is included in the denominator of the Taxpayer's sales factor and is excluded from the numerator of the factor. This treatment is appropriate~~required~~ even though the Taxpayer's sales to New Zealand customers were less than anticipated. Any loss recognized on the forward contract is treated as a reduction (but not below zero) of the gross receipts from sales to New Zealand customers that are included in the denominator of the sales factor.

7) Section 988 Transactions

A) Section 988 Transactions. For sales factor purposes, foreign currency gain or loss that is computed under IRC section~~26 USC~~ 988, with respect to accrued interest income or expense, gain or loss on a debt instrument, a payable, a receivable or a forward contract payable in a foreign currency described in 26 CFR 1.988-

1(a)(2) is treated as an adjustment to the income, expense, gain or loss. Accordingly, the foreign currency gain or loss is included in the numerator and denominator of the sales factor only to the extent that the income to which the foreign currency gain or loss relates is included in the numerator and denominator of the sales factor. Foreign currency gains and losses with respect to expense are excluded from the numerator and denominator of the sales factor. ~~EXAMPLES:~~ The provisions of this subsection (c)(7)(A) may be illustrated by the following examples:

EXAMPLE 1: ~~i)~~Taxpayer is a corporation on the accrual method of accounting with the U.S. dollar as its functional currency. On January 1, 2008, Taxpayer converts $13,000 to 10,000 British pounds (£) at the spot rate of £1 = $1.30 and loans the £10,000 to Y for 3 years. The terms of the loan provide that Y will make interest payments of £1,000 on December 31 of 2008, 2009 and 2010 and will repay Taxpayer's £10,000 principal on December 31, 2010. Based on average spot rates for 2008, 2009 and 2010 of £1 = $1.32, £1 = $1.37 and £1 = $1.42, respectively, Taxpayer accrues interest income of $1,320 for 2008, $1,370 for 2009, and $1,420 for 2010. Under IITA Section 304(a), the accrued interest income is included in the denominator of Taxpayer's sales factor, but is excluded from the numerator of its sales factor. Based on spot rates on December 31, 2008, December 31, 2009 and December 31, 2010 of £1 = $1.35, £1 = $1.40 and £1 = $1.45, respectively, Taxpayer recognizes for federal income tax purposes exchange gain of $30 upon receipt of the interest on December 31 of 2008, 2009 and 2010. In addition, Taxpayer recognizes, for federal income tax purposes, exchange gain of $1,500 upon repayment of the loan principal on December 31, 2010. Under subsection (c)(7)(A), the $30 of exchange gain recognized with respect to the accrued interest for 2008, 2009 and 2010 is included in the denominator of Taxpayer's sales factor and is excluded from the numerator of its sales factor. The $1,500 of exchange gain with respect to the repayment of principal on December 31, 2010 is excluded from both the numerator and denominator of Taxpayer's sales factor because repayment of principal on a loan is not included in the sales factor.

EXAMPLE 2: ~~ii)~~Taxpayer is a corporation on the accrual method of accounting with the U.S. dollar as its functional currency. On January 15, 2008, Taxpayer sells inventory for 10,000 Canadian dollars (C$). The spot rate on January 15, 2008 is C$1 = U.S. $.55. Under IITA Section 304(a), $5,500 in gross receipts from this sale is included in the denominator of Taxpayer's sales factor, and is excluded from the numerator of the sales factor. On February 23, 2008, when Taxpayer receives payment of the C$10,000, the spot rate is C$1 = U.S. $.50. For federal income tax purposes, Taxpayer recognizes ($500) of exchange loss upon receipt of C$10,000 on February 23, 2008. Under subsection (c)(7)(A), the ($500) exchange loss with respect to the January 15, 2008 sale is included in the denominator of the Taxpayer's sales factor and is excluded from the numerator of the sales factor. The exchange loss is reflected as a reduction of the denominator of the Taxpayer's sales factor.

B) Section 986(c)(1) Foreign Exchange Gain or Loss on Distributions of Previously Taxed Income. Foreign currency gain or loss recognized pursuant to IRC section~~26 USC~~ 986(c)(1) on distributions of amounts previously taxed to the recipient as subpart F income or as earnings of a qualified electing fund are~~shall be~~ excluded from both the numerator and denominator of the sales factor because those distributions are excluded from federal gross income and, therefore, from the sales factor.

d) Unitary Partners: Inclusion of shares of partnership unitary business income and factors in combined unitary business income and factors of partners.

1) IITA Section 304(e) provides that whenever *2 or more persons are engaged in a unitary business as described in IITA Section 1501(a)(27), a part of which is conducted in this State by one or more members of the group, the business income attributable to this State by any member or members is~~shall be~~ apportioned by means of the combined apportionment method.* Because partnerships may be members of a unitary business group within the meaning of IITA Section 1501(a)(27), this provision requires a partnership to use combined apportionment when it is engaged in a unitary business with one or more of its partners. However, partners who are not engaged in a unitary business with the partnership ~~are~~

~~required to~~ include their shares of the partnership's business income apportioned to Illinois in their Illinois net incomes under IITA Section 305(a), and those partners' business activities or share of the partnership's market in Illinois would not be represented fairly by their shares of partnership income computed by combining the business income and apportionment factors of the partnership with the business income and apportionment factors of its unitary partners.

2) Accordingly, except in a case in which substantially all of the interests in the partnership (other than a publicly-traded partnership under IRC section~~26 USC~~ 7704) are owned or controlled by members of the same unitary business group, when the business activities of a partnership and any of its partners' business activities constitute a unitary business:

A) The partner's distributive share of the business income and apportionment factors of the partnership are~~shall be~~ included in that partner's business income and apportionment factors. Also, for taxable years ending on or after December 31, 2017, the partner's distributive share of the everywhere sales of the partnership is included in the partner's everywhere sales for purposes of applying Section 100.3600. In determining the business income of the partnership, transactions between the unitary partner (or members of its unitary business group) and the partnership are not~~shall not be~~ eliminated. However, all transactions between the unitary business group and the partnership are~~shall be~~ eliminated for purposes of computing the apportionment factors of the partner and of any other member of the unitary business group.

EXAMPLE: Partner and Partnership are engaged in a unitary business. Partner owns a 20% interest in Partnership. Partnership has $10,000,000 in sales everywhere, $3,000,000 of which are to Partner, and $4,000,000 in Illinois sales, $1,000,000 of which are to Partner. In computing its apportionment factor, Partner will include $1,400,000 from Partnership in its everywhere sales (20% of Partnership's $10,000,000 in everywhere sales, after eliminating the $3,000,000 in sales to Partner) and $600,000 from Partnership in its Illinois sales (20% of Partnership's $4,000,000 in Illinois sales, after eliminating the $1,000,000 in sales to Partner). Also,

Partner must eliminate any sales it made to Partnership.

B) If a partnership and one of its partners are engaged in a unitary business and the partnership is itself a partner in a second partnership:

i) If the partner is not engaged in a unitary business with the second partnership, the partner's share of the first partnership's share of the business income and apportionment factors of the second partnership are not~~shall not be~~ included in the partner's business income and apportionment factors. Instead, the partner's share of the first partnership's share of the base income apportioned to Illinois by the second partnership are~~will be~~ included in the partner's Illinois net income.

ii) If the partner is engaged in a unitary business with the second partnership, the partner's share of the first partnership's share of the business income and apportionment factors of the second partnership are~~shall be~~ included in the partner's business income and apportionment factors.

C) If, for taxable years ending on or after December 31, 2017, a partner and a partnership engaged in a unitary business apportion their business income using different apportionment formulas under IITA Section 304:

i) The apportionment percentage of the partnership is computed under the provisions of Section 100.3600 by treating the partnership as a member of the unitary business group, but using only that partner's distributive share of the partnership's apportionment factors and sales, and that partner's apportionment percentage is equal to that partner's apportionment percentage computed under Section 100.3600 plus the partnership's apportionment percentage computed under Section 100.3600.

ii) If a partnership has more than one partner in the same

unitary business group, and the partnership uses a different apportionment formula than one or more of the partners, each partner that uses the same apportionment formula as the partnership will compute its apportionment factor as provided in subsection (d)(2)(A) and each partner that uses a different apportionment formula will compute its apportionment factor as provided in subsection (d)(2)(C)(i).

3) This subsection (d) does~~shall~~ not apply to a partner's shares of business income and apportionment factors from any partnership that cannot be included in a unitary business group with that partner.

A) This subsection (d) does not apply because:

i) for taxable years ending prior to December 31, 2017, the partner and the partnership ~~are required to~~ apportion their business income using different apportionment formulas under IITA Section 304, and therefore cannot be members of a unitary business group under IITA Section 1501(a)(27); or

ii) the business activities of either the partner or the partnership outside the United States are equal to or greater than 80% of the total worldwide business activities of that partner or partnership, as determined under IITA Section 1502(a)(27)~~ of the IITA~~. In applying this 80-20 test to a taxpayer, no apportionment factors of any partnership shall be included in the apportionment factors of that taxpayer pursuant to this subsection (d).

B) For taxable years ending prior to December 31, 2017, if~~If~~ the partnership is itself a partner in a second partnership, and one of its partners is engaged in a unitary business with the second partnership and is not prohibited from being a member of a unitary business group that includes the second partnership under subsection (d)(3)(A)(i) or (ii), that partner includes~~shall include~~ in its business income and apportionment factors its share of the partnership's share of the second partnership's business income and apportionment factors.

4) If substantially all of the interests in a partnership (other than a publicly-traded partnership under IRC section~~26 USC~~ 7704) are owned or controlled by members of the same unitary business group as the partnership, the partnership is~~shall be~~ treated as a member of the unitary business group for all purposes, and, for purposes of applying IITA Section 305(a) to any nonresident partner who is not a member of the same unitary business group, the business income of the partnership apportioned to this State is~~shall be~~ determined using the combined apportionment method prescribed by IITA Section 304(e). For purposes of this subsection (d), substantially all of the interests in a partnership are owned or controlled by members of the same unitary business group if more than 90% of the federal taxable income of the partnership is allocable to one or more of the following persons:

A) any member of the unitary business group;

B) any person who would be a member of the unitary business group if not for the fact that 80% or more of that person's business activities are conducted outside the United States;

C) any person who would be a member of the unitary business group except for the fact that the person and the partnership apportion their business incomes under different subsections of IITA Section 304, for taxable years ending prior to December 31, 2017, would be excluded from a unitary business group in which the partnership is a member; or

D) any person who would be disallowed a deduction for losses by IRC section 267(b), (c) and (f)(1) by virtue of being related to any person described in subsections (d)(4)(A), (B) or (C)~~ of this Section~~, as well as any partnership in which a person described in subsections (d)(4)(A), (B) or (C) is a partner.

5) Examples.~~EXAMPLES:~~

EXAMPLE 1:~~A)~~ Corporation A owns a 50% interest in P-1, a partnership. Corporation A and P-1 are engaged in a unitary business within the meaning of IITA Section 1501(a)(27). P-1 itself conducts no

business activities in Illinois, and the Illinois numerator of its apportionment factor is zero. P-1 holds a 50% interest in P-2, a partnership doing business exclusively in Illinois. P-1 has $1.4 million of taxable business income, not including any income from P-2. P-2 has base income of $1 million, all of which is business income, and on a separate-entity basis, all of its business income would be apportioned to Illinois.

EXAMPLE 2:~~B)~~ If Corporation A and P-2 are not members of the same unitary business group, Corporation A would compute its business income apportioned to Illinois by including $700,000 (50% of $1.4 million) of P-1's business income in Corporation A's business income, and 50% of P-1's apportionment factors in its apportionment factors. Corporation A also would include in its Illinois net income its 50% share of P-1's 50% share of the base of P-2 apportionable to Illinois, or $250,000 (50% of 50% of $1 million).

EXAMPLE 3:~~C)~~ If Corporation A, P-1 and P-2 are members of the same unitary business group, P-1 will include 50% of P-2's business income and 50% of P-2's apportionment factors in its own business income and apportionment factors. Accordingly, P-1's business income will be $1.9 million (the $1.4 million it earned directly plus its 50% share of P-2's $1 million in business income). Corporation A will then compute its business income apportioned to Illinois by including its 50% share of P-1's business income, or $950,000 (50% of $1.9 million) with its business income and its 50% share of P-1's apportionment factors (which will include P-1's share of P-2's apportionment factors) in its apportionment factors.

EXAMPLE 4: ~~D)~~If Corporation A, P-1 and P-2 are unitary, but P-1 is excluded from the~~cannot be included in a~~ unitary business group of~~with~~ Corporation A and P-2 because those entities apportion their business income under IITA Section 304(a) and P-1 is a financial organization that apportions its business income under IITA Section 304(c) and the taxable year ends prior to December 31, 2017, Corporation A includes~~will include~~ in its business income and apportionment factors its 50% share of P-1's 50% share of the business income and apportionment factors of P-2. Also, Corporation A's Illinois net income includes~~will include~~ 50% of the business income of P-1 apportioned to Illinois by P-1 using its own apportionment factors. Because, in this example, P-1 is not doing business in Illinois, none of its business income is~~will be~~ included in Corporation

A's Illinois net income.

EXAMPLE 5: In a taxable year ending December 31, 2017, a combined group is comprised of two corporations: Financial Organization (which apportions its business income using the financial organization formula under IITA Section 304(c)) and Insurance Company (which apportions its business income using the premiums factor under IITA Section 304(b)). Financial Organization A is a 20% partner in Partnership, which apportions its business income using the sales factor formula under IITA Section 304(a). Partnership is engaged in a unitary business with the members of the combined group. The apportionment data for the members of the unitary business group are as follows:

		Respective Section 304 Formula		
Company	Everywhere Sales	Numerator	Denominator	Percentage
Insurance Co.	$200	$9	$150	6.000%
Financial Org.	$300	$75	$250	30.000%
Partnership	$500	$100	$500	6.000%
Financial Org's Partnership Share	$100	$20	$100	20.000%
Grand Total	$600			

The apportionment percentages of each member of the group are computed as follows:

	A	B	C	D	E
Company	Section 304 Apportionment Percentage	Subgroup Everywhere Sales	A * B	Group Everywhere Sales	C ÷ D
Insurance Co.	6.000%	$200	$12.00	$600	2.000%
Financial Org.	30.000%	$300	$90.00	$600	15.000%
Financial Org's Partnership Share	20.000%	$100	$20.00	$600	3.333%

Financial Organization's apportionment percentage is 18.333% (the 15.000% computed under Section 100.3600 and its 3.333% share of Partnership's apportionment percentage computed under Section 100.3600) and the apportionment percentage of the group is 20.333%.

e) Apportionment of Business Income by Foreign Taxpayers.

1) Under IRC section~~26 USCA~~ 882, foreign corporations include only effectively-connected income in their federal taxable income. Foreign taxpayers may exclude other items of income from their federal taxable income if authorized under treaty, as provided in IRC section~~26 USCA~~ 894. Using a foreign taxpayer's worldwide apportionment factors to determine how much of its domestic business income should be apportioned to Illinois would not fairly represent that taxpayer's business activities or market within Illinois. Accordingly, a foreign taxpayer uses~~shall use~~ only the apportionment factors related to its domestic business income when apportioning its business income to Illinois. Similarly, in determining whether 80% or more of a foreign taxpayer's total business activity is conducted outside the United States for purposes of IITA Section 1501(a)(27), that taxpayer must use only the apportionment factors related to the business income included in its federal taxable income (plus addition modifications), rather than use all of its worldwide factors.

2) Foreign Sales Corporations. Under IRC section~~26 USC~~ 921, "exempt foreign trade income" of a foreign sales corporation is treated as foreign source income excluded from gross income. "Exempt foreign trade income" is defined in IRC section~~26 USC~~ 923 to equal the sum of the amounts of income derived from various categories of transaction, with the income from each category multiplied by specific percentages. As a general rule, there is no systematic relationship between transactions qualifying for this treatment and any particular item of property or payroll of a foreign sales corporation. Accordingly, the provisions of subsection (e)(1) do~~of this Section shall~~ not apply to a foreign sales corporation and, in apportioning its business income and in determining whether 80% or more of its business activity is conducted outside the United States, a foreign sales corporation uses~~shall use~~ all of its apportionment factors.

(Source: Amended at 43 Ill. Reg. _____, effective _____)

Section 100.3600 Combined Apportionment for Taxpayers Using Different Apportionment Formulas (IITA Section 1501(a)(27))

a) IITA Section 1501(a)(27) provides that, *in no event, for taxable years ending prior to December 31, 2017, may any unitary business group include members that are ordinarily required to apportion business income under different subsections of IITA Section 304.*

b) For taxable years ending on or after December 31, 2017, the business income of a unitary business group that includes members who apportion their business income under different subsections of IITA Section 304 is apportioned using the average of the apportionment percentages of each subgroup of members using the same apportionment formula (computed as if that subgroup were a separate unitary business group) weighted by the everywhere sales of the members of each subgroup (as determined under Sections 100.3370 and 100.3380). The apportionment percentage of each member of the unitary business group is the apportionment percentage that member would compute if the subgroup of members using the same apportionment formula of that member were a separate unitary business group. The computation of the apportionment percentage of each member is equal to a fraction in which:

1) the numerator for each member is:

A) the total sales everywhere, as determined under Sections 100.3370 and 100.3380, for all members of the group that apportion business income under the same subsection of IITA Section 304 as that member,

B) multiplied by a fraction equal to:

i) that member's Illinois numerator of the apportionment factor determined under the subsection of IITA Section 304 used by that member to apportion its business income,

ii) divided by the total denominators of that apportionment factor of all members required to apportion business

income under the same subsection of IITA Section 304; and

2) the denominator is the sum of the everywhere sales of all members of the unitary business group, as determined under Sections 100.3370 and 100.3380.

c) EXAMPLE: A combined group is composed of 6 members: Corporations A and B (who apportion their business income using the sales factor under IITA Section 304(a), so that the numerator and denominator of the Respective Section 304 Formula columns are their Illinois and everywhere sales, respectively), Insurance Companies A and B (who apportion their business income using the premiums factor under IITA Section 304(b), so that the numerator and denominator of the Respective Section 304 Formula columns are their Illinois and everywhere premiums, respectively) and Transportation Companies A and B (who apportion their business income using the transportation company formula under IITA Section 304(d), so that the numerator and denominator of the Respective Section 304 Formula columns are their Illinois and everywhere transportation receipts and revenue miles, respectively). The apportionment data for the members of the group are as follows:

		Respective Section 304 Formula		
Company	Everywhere Sales	Numerator	Denominator	Percentage
Corporation A	$100	$10	$100	3.333%
Corporation B	$200	$25	$200	8.333%
Subgroup Total	$300	$35	$300	
Insurance A	$250	$3	$50	2.000%
Insurance B	$450	$6	$100	4.000%
Subgroup Total	$700	$9	$150	
Transportation A	$300	$5	$25	2.500%
Transportation B	$700	$7.5	$175	3.750%
Subgroup Total	$1,000	$12.5	$200	
Grand Total	$2,000			

Note that the everywhere sales of the insurance and transportation companies exceed the denominators of those companies' apportionment

formulas because the denominators of insurance and transportation companies include only premiums and income from transportation services, respectively, while the everywhere sales of those companies include all gross business receipts of those companies, except amounts specifically excluded from the sales factor under Sections 100.3370 and 100.3380. For example, interest, gross rental income and net gains or losses on sales of intangibles in the regular course of business are included in the sales factor, but not in the apportionment formulas used by insurance or transportation companies, and so would cause the everywhere sales of an insurance or transportation company to exceed the denominator of its apportionment formula. The apportionment fraction of each member of the group and for the group is computed as follows:

	A Section 304 Apportionment Percentage	B Subgroup Everywhere Sales	C A * B	D Group Everywhere Sales	E C ÷ D
Corporation A	3.333%	$300	$10.00	$2,000	0.500%
Corporation B	8.333%	$300	$25.00	$2,000	1.250%
Insurance A	2.000%	$700	$14.00	$2,000	0.700%
Insurance B	4.000%	$700	$28.00	$2,000	1.400%
Transportation A	2.500%	$1,000	$25.00	$2,000	1.250%
Transportation B	3.750%	$1,000	$37.50	$2,000	1.875%
Total					6.975%

(Source: Added at 43 Ill. Reg. _____, effective _____)

SUBPART Q: COMBINED RETURNS

Section 100.5220 Designated Agent for the Members (IITA Section 304(e))

a) Qualification. The ~~members of a combined group must designate the~~ controlling corporation of a combined group is the designated agent for the group~~as the agent~~ if the controlling corporation is a member of the combined group. Otherwise, the members of the combined group may~~must~~ choose any~~which~~ Illinois taxpayer member of the combined group to~~will~~ be the designated agent. Designation of the agent is made on Schedule UB. Instances in which a controlling corporation is not~~will not be~~ a member of the combined group include:

1) The combined group is comprised of corporations that~~which~~ are wholly owned by an individual. In this instance, there is no controlling corporation.

2) A manufacturing corporation that apportions~~required to apportion~~ its business income under IITA Section 304(a) owns a unitary business group of financial organizations required to apportion their business income under IITA Section 304(c). IITA Section 1502(a)(27) provides that, for taxable years ending prior to December 31, 2017, corporations that~~which~~ use different apportionment formulas under IITA Section 304 are not~~may not be~~ included in the same unitary business group. Accordingly, the controlling corporation in this example is not a member of the~~may not be in the same~~ combined group comprised of~~as~~ its financial organization subsidiaries.

3) The controlling corporation does not have nexus with Illinois, and thus is not an Illinois taxpayer. Only Illinois taxpayers may be members of a combined group.

b) Scope of Agency. The designated agent, for all purposes other than the making of the consent required by Section 100.5210(a)(2)~~ of this Part~~, is~~shall be~~ the sole agent for each member of the combined group, duly authorized to act in its own name in all matters relating to the tax liability for the combined return year. Except as provided in the preceding sentence, no member has~~shall have~~ authority to act for or to represent itself in any Illinois income tax~~such~~ matter. For example, all correspondence between the Department and the combined group is~~will be~~ carried on directly with the designated agent; the designated agent files~~shall file~~ for all extensions of time; notices of deficiencies are~~will be~~ mailed only to the designated agent, and the mailing to the designated agent is~~shall be~~ considered as a mailing to each member in the group; notice and demand for payment of taxes is~~will be~~ given only to the designated agent and the~~such~~ notice and demand will be considered ~~as~~ a notice and demand to each member. All taxes, including estimated taxes, are~~shall be~~ paid in the name of the designated agent. The designated agent participates~~shall participate~~ in investigations and hearings on behalf of each member; it makes~~shall make~~ available the information necessary to conduct those proceedings; and it may execute a power of attorney on behalf of itself and the other members of the combined group. The designated agent files the~~will file~~ combined returns and claims for refund or credit of the combined

group. Any~~, and any~~ refund is~~will be~~ made directly to and in the name of the designated agent and discharges~~will discharge~~ any liability of the State~~ in respect thereof~~ to any member of the combined group. The~~; and the~~ designated agent, in its name, may~~will~~ give waivers and execute closing agreements and all other documents. Any~~, and any~~ waiver so given, or agreement or any other document so executed, is~~shall be~~ considered as having also been given or executed by each member of the combined group. Notwithstanding~~Nothwithstanding~~ the preceding provisions of this subsection (b), if the Department deals in good faith with a member representing itself to be designated agent for a combined group, any action of that~~such~~ member or of the Department in the course of that~~such~~ dealing has~~shall have~~ the same effect as if the~~such~~ member were the designated agent.

c) Notices from the Department. Notwithstanding the provisions of subsection (b) ~~above~~, any Notice of Deficiency, in respect to the tax for a combined return year, will identify each corporation that~~which~~ was a member of the combined group during any part of the period covered by the~~such~~ notice. A failure to properly list all members of the combined group does~~will~~ not affect the validity of the Notice of Deficiency as to any member. Any notice and demand for payment will be sent to the designated agent and the Department will, if requested by the designated agent, identify each corporation that~~which~~ was a member of the combined group during any part of the period for which the notice and demand is issued. Any levy, any notice of a lien, or any other proceeding to collect the amount of any assessment, after the assessment has been made, will name the corporation from which the~~such~~ collection is to be made.

d) Continuity of Agency. The provisions of subsections (b) and (c)~~ above shall~~ apply to those tax years for which a combined return is required to be made, whether or not a combined return is made for any subsequent year, and whether or not one or more persons have become or have ceased to be members of the combined group at any time.

1) Once a member of a combined group is appointed as the designated agent for that combined group, it remains~~shall remain~~ the designated agent for all future years unless:

A) the designated agent ceases to be an eligible member of the combined group. A~~, in which case a~~ new designated agent is~~must be~~ appointed for purposes of common taxable years ending after the date the designated agent ceases to be an eligible member;

B) the controlling corporation of the unitary business group either becomes an eligible member or is replaced as controlling corporation by an eligible member, at which time the controlling corporation becomes~~shall become~~ the designated agent for purposes of common taxable years ending thereafter; or~~.~~

C) a combined group, for its first taxable year ending on or after December 31, 2017, is comprised of two or more combined groups that were not included in the same unitary business group in the previous taxable year because the members of each group used a different apportionment formula under IITA Section 304, and the controlling corporation is not a member of the combined group. The combined group may choose any member of the combined group as the designated agent for that taxable year, whether or not that member was the designated agent of any of the combined groups in the previous taxable year.

2) The designated agent that~~which~~ files a return for a common taxable year continues~~must continue~~ to act as designated agent for the combined group for that common taxable year~~ unless~~:

A) unless the designated agent is being dissolved or a new designated agent has been appointed for the combined group under subsection (d)(1)~~ above,~~ and, in either case, the designated agent notifies the Department in writing that another member of the combined group (or a successor corporation of any member of the combined group) will thereafter act as designated agent for that common taxable year. The member appointed as the substitute designated agent for this purpose need not be the new designated agent appointed under subsection (d)(1)~~ above~~. The substitute designated agent will succeed to the rights and responsibilities of the former designated agent under subsections (b) and (c)~~ above,~~ and may, in turn, appoint another substitute designated agent under this subsection (d)(2)(A); or

B) if the designated agent is unable or unwilling to satisfy the tax liability of the combined group or is unresponsive, the Department may, upon notifying the designated agent, deal directly with any

member of the combined group in respect to its liability, in which event that~~such~~ member has~~shall have~~ full authority to act for itself.

e) Notification of Deficiency~~deficiency~~ to Corporation~~corporation~~ that~~which~~ has Ceased~~ceased~~ to be a Member~~member~~ of the Combined Group~~combined group~~. If a corporation that joined~~made the election to file or was required to join~~ in the filing of a combined return has ceased to be a member of the combined group, and if that~~such~~ corporation files written notice of the~~such~~ cessation with the Department, then the Department, upon request of that~~such~~ corporation, will furnish the corporation with a copy of any Notice of Deficiency in respect of the tax for a combined return year for which it was a member of the combined group and information regarding any notice and demand for payment of that~~such~~ deficiency. The written notice of cessation should be mailed to the address stated in the instructions to Illinois Schedule UB. The filing of the~~such~~ written Notice of Deficiency~~notification~~ and request by a corporation does~~shall~~ not have the effect of limiting the scope of the agency of the designated agent provided for in subsection (b) ~~above~~ with respect to those tax years during which the corporation was a member of the combined group. Failure ~~and a failure~~ by the Department to comply with the corporation's~~such~~ written request does~~shall~~ not have the effect of limiting the liability of the~~such~~ corporation provided for in Section 100.5250 ~~of this Part~~.

f) Appointment of Designated Agent~~designated agent~~ for Purposes~~purposes~~ of Resolving Disputes Over Membership~~resolving disputes over membership~~ in a Combined Group~~combined group~~. If the Department determines that one or more corporations that~~which~~ did not join in the filing of a combined return are members of a combined group, or that one or more corporations that~~which~~ did join in the filing of a combined return are not members of the combined group that~~which~~ filed the return, then, for purposes of resolving disputes over the membership of the combined group and any separate company item of any such corporation:

1) if~~If~~ no combined return was filed, the corporations may appoint a member of the combined group that meets the requirements of subsection (a) as the designated agent solely for purposes of contesting the Department's determination. The Department may accept a written representation made by any member of the combined group that it has been appointed the designated agent. The appointment of a designated agent under this provision is not~~shall not be construed as~~ a concession by either the corporations or the Department regarding the proper composition of the

combined group. The designated agent appointed under this subsection (f)(1)~~provision~~ has~~shall have~~ all the rights and responsibilities of a designated agent under this Section. The designated agent appointed under this subsection (f) continues~~must meet the qualifications of subsection (a) of this Section and must continue~~ to act as designated agent for the combined group under the provisions of subsection (d)~~ of this Section~~.

2) if~~If~~ a combined return was filed, the designated agent that~~which~~ filed the return represents~~shall represent~~ all corporations that~~which~~ joined in the filing of the combined return and all corporations ~~which~~ the Department asserts are members of the combined group.~~; provided, however, that~~

A) However, the Department may allow any corporation included in the return that~~which~~ the Department asserts should be added to or eliminated from the combined group~~ included in the return~~ to represent itself after receipt of a written request from that~~such~~ corporation.~~; provided further that,~~

B) In~~in~~ such case, any such corporation shall be bound by any action taken by the designated agent (including, for example, extensions of the statute of limitations, settlements, stipulations or concessions of fact) before the request of the~~such~~ corporation to represent itself has been accepted by the Department.

(Source: Amended at 43 Ill. Reg. _____, effective _____)

Section 100.5270 Computation of Combined Net Income and Tax (IITA Section 304(e))

a) Determination of Base Income. The combined base income is~~shall be~~ determined by first computing the combined group's combined taxable income and then modifying this amount by the combined group's combined Illinois addition and subtraction modification amounts.

1) Combined Net Income. Combined~~The designated agent will determine combined~~ base income is determined by treating all members of the unitary business group (including ineligible members) as if they constituted a federal consolidated group and by applying the federal regulations for determining consolidated taxable income, except that the separate return limitation year provisions and the limitations on

consolidation of life and non-life companies in 26 CFR 1.1502-47 do~~shall~~ not apply. (See 26 CFR 1.1502-11.) A consolidated net operating loss deduction, as defined in 26 CFR 1.1502-21 is~~shall be~~ added back to taxable income, in whole or in part, in accordance with subsections (a)(2), (a)(4) and (a)(5). Pursuant to IITA Section 203(e)(2)(E), combined base income is~~shall be~~ determined as if the election provided by IRC section~~26 USC~~ 243(b)(2) had been in effect.

EXAMPLE 1:~~.~~ Corporations A and B properly make an election under IITA Section 502(e), or are properly required to file a combined return under IITA Section 502(e). On a separate return basis, A's federal taxable income would be a loss of ($500). This amount does not include an excess capital loss of $75 pursuant to IRC section~~26 USC~~ 1211(a). B's federal taxable income is $1,000 of which $100 is capital gain. As a result of applying 26 CFR 1.1502-11 and 26 CFR 1.1502-22, the combined federal taxable income for A and B is $425.

2) Combined Illinois Net Loss. The combined group's current year combined taxable income may be less than zero, in which case combined taxable income is~~it shall be~~ determined by applying the provisions of 26 CFR 1.1502-21(f) (consolidated net operating loss) to the unitary business group.

EXAMPLE 2:~~.~~ Same facts as Example 1 in subsection (a)(1) except that Corporation C has also properly joined in the election, or is properly required to join in the combined return filing, and its federal taxable income is a loss of ($800). If there are no addition or subtraction modifications and all of the group's base income is apportioned to Illinois, the group's combined Illinois net loss for the taxable year is~~will be~~ ($375).

3) Carrybacks and Carryovers. Carrybacks and carryovers, if any, are~~shall be~~ determined for each member and not for the group. A pro rata share of the loss is attributable to each of the loss members. For Illinois net losses that occurred in taxable years ending on or after December 31, 1986, the amount of any carryback or carryover is~~shall be~~ determined by applying Sections 100.2340 and~~,~~ 100.2350(c)(3) and (c)(4). For federal net operating losses that occurred in taxable years ending prior to December 31, 1986, the amount of any carryback or carryforward is~~shall be~~ determined by applying Section 100.2230.

EXAMPLE 3:~~.~~ Same facts as Example 2 in subsection (a)(2). Assuming the taxable year ends prior to December 31, 1986, the group's combined net operating loss of ($375) is~~will be~~ divided between A and C as follows for purposes of carryback and carryover:

Corp. A: 500/1,300 x (375) = 144

Corp. C: 800/1,300 x (375) = 231

4) ~~NOL~~ Addition Modification of Federal Net Operating Loss (NOL) Deductions from a Loss Incurred in a Taxable Year Ending on or after December 31, 1986. IITA Section 203(b)(2)(D) provides~~requires~~ that the amount of any federal net operating loss deduction taken in arriving at taxable income for federal tax purposes, other than from a loss in a taxable year ending prior to December 31, 1986, is~~shall be~~ added back to taxable income in the computation of base income. (See Section 100.2320(a).)

5) ~~NOL~~ Addition Modification of Pre-December 31, 1986~~,~~ Federal Losses. IITA Section 203(b)(2)(E) provides~~requires~~ an addition modification subject to two limitations for taxable years in which a federal net operating loss carryforward from a taxable year ending prior to December 31, 1986, is an element of taxable income. Consequently, each member allowed to carryback or forward a portion of the group's combined net operating loss from a year in which that combined loss was used to offset a portion of the group's combined excess addition modifications takes~~must take~~ as an addition modification in the carryback or carryover year its respective share of the NOL addition modification provided~~required~~ by IITA Section 203(b)(2)(E). In accordance with Section 100.2240, the respective shares are~~shall be~~ determined in the same manner as the determination of the amount of NOL carryback or carryover.

EXAMPLE 4:~~.~~ Same facts as Example 2 in subsection (a)(2) except that the group had combined excess addition modifications of $100. This amount will be divided among the loss members as follows:

Corp. A: 500/1,300 x 100 = 38

Corp. C: 800/1,300 x 100 = 62

b) Combined Base Income Allocable to Illinois. Combined base income allocable to Illinois is the sum of the combined business income or loss apportioned to Illinois plus the combined nonbusiness income or loss allocated to Illinois plus the combined business income or loss apportioned to Illinois by partnerships in which the members are partners (other than partnerships that apportion business income under Section 100.3380(d)), less the combined net loss deduction.

1) Combined Business Income Apportionable to Illinois. In the case of a combined group composed solely of members that apportion their business income under the same subsection of IITA Section 304 (that is, insurance companies apportioning business income under IITA Section 304(b), financial organizations apportioning business income under IITA Section 304(c), federally regulated exchanges apportioning business income under IITA Section 304(c-1), transportation companies apportioning business income under IITA Section 304(d), and all other businesses apportioning business income under IITA Section 304(a)), the combined group's combined business income is apportioned using the total Illinois factors of the combined group and total everywhere factors of the unitary business group. In the case of a combined group that includes members that apportion their business income under different subsections of IITA Section 304, the combined group's combined business income is apportioned as provided in Section 100.3600.~~required to apportion its business income using the three-factor (payroll, property and sales) formula under IITA Section 304(a), the designated agent will apportion the unitary business group's combined business income by using the total Illinois payroll, property and sales of each member of the combined group and the total everywhere payroll, property and sales of each member of the unitary business group (including ineligible members). In the case of groups composed exclusively of one-factor apportionment taxpayers (financial, insurance, or transportation), the unitary business group's combined business income will be apportioned by using the combined group's total Illinois financial, insurance, or transportation factors and total everywhere factors of the unitary business group.~~ Items of income and deduction arising from transactions between members of the unitary business groups are~~must be~~ eliminated whenever necessary to avoid distortion of the denominators used by the unitary business group in calculating apportionment factors, or of the numerators used by the combined group or by ineligible members of the group in calculating

apportionment factors.

~~A)~~EXAMPLE 1:

~~i)~~Corporations A, B~~,~~ and C constitute a unitary business group. Corporations A and B are eligible to make the election under IITA Section 502(e) for tax years ending before December 31, 1993. However, under Public Law 86-272, Corporation C is not taxable in Illinois. ~~ii)~~Based on these facts, if the election to be treated as one taxpayer is made, the combined Illinois sales factor is~~must be~~ determined by dividing the combined group's total combined Illinois sales (that is, excluding any sales of Corporation C shipped to purchasers in Illinois) by the total combined sales of the unitary business group everywhere. If the same facts are applied to a tax year ending on or after December 31, 1993, the same result will occur in the mandatory combined return situation.

~~B)~~EXAMPLE 2:

~~i)~~Same facts as in Example 1, except these additional facts also exist. Under Public Law 86-272, Corporations B and C are taxable in South Carolina, but corporation A is not. ~~ii)~~ Based on these facts, if the election to be treated as one taxpayer is made, or the taxpayers are required to be treated as one taxpayer, the combined Illinois sales factor is~~must be~~ determined by dividing the combined group's total Illinois sales (including any sales of Corporation A shipped to purchasers in South Carolina from any place of storage in Illinois, i.e., throwback sales) by the total sales of the unitary business group everywhere.

2) Combined Nonbusiness Income and Business Income Apportioned to Illinois by Partnerships in which the Members are Partners (other than partnerships that apportion business income under Section 100.3380(d)). The ~~designated agent shall compute the~~ amount of combined nonbusiness income or loss allocable to Illinois is computed by first determining the amount for each member of the combined group and then combining these amounts. Similarly, ~~the designated agent shall compute~~ the amount of combined business income or loss apportioned to Illinois by partnerships in which the members are partners (other than partnerships that apportion business income under Section 100.3380(d)) is computed by first determining the amount for each member and then combining these

amounts.

3) Combined Illinois Net Loss Deduction. The ~~designated agent shall compute the~~ combined Illinois net loss deduction for losses originating in tax years ending on or after December 31, 1986 is computed by determining the amount of deduction available for each member of the combined group in accordance with Sections 100.2330, 100.2340 and 100.2350 and then by combining these amounts.

c) Combined Exemption. Under the election or requirement to be treated as one taxpayer, there is one exemption per combined return. The ~~designated agent shall compute the~~ combined exemption is computed by multiplying the amount of the exemption allowed under IITA Section 204 and Section 100.2055 by a fraction, the numerator of which is combined base income allocable to Illinois and the denominator of which is the group's combined base income. The exemption amount for members of unitary groups not making the election, or not subject to the requirement, and for members of unitary groups ineligible to make the election, or not subject to the requirement, is computed by multiplying the amount of the exemption allowed under IITA Section 204 and Section 100.2055 by a fraction, the numerator of which is that member's base income allocable to Illinois, and the denominator of which is the group's combined base income.

d) Combined Credits

1) Applicability of Credits. Any~~The designated agent will compute any~~ credit allowed by the IITA is determined based on the combined activities of the members of the combined group and that credit is~~will be~~ applied against the combined liability of the combined group.

2) Credits Based on Members' Activities. The investment credits provided in IITA Sections 201(e), (f) and (h) and 206(b) are available when certain property is purchased and placed in service by a taxpayer. The combined group is~~shall~~ be entitled to a combined credit, assuming the other statutory or regulatory requirements applicable to the given credit are satisfied, even if one of the members purchases the qualified property and another member uses the property in a qualified manner.

3) Effective January 1, 1994, the investment credit provided in IITA Section 201(e) is allowed for a taxpayer who is *primarily engaged in*

manufacturing, or in mining coal or fluorite, or in retailing. In the case of a combined group, the determination of eligibility is~~shall be~~ made for the combined group as a whole, rather than for any individual member. The determination of whether a combined group is primarily engaged in a qualifying activity is~~shall be~~ made by applying the 50% of gross receipts test in Section 100.2101(f) by taking into account the gross receipts of only the eligible members of the combined group. Gross receipts of corporations that~~which~~ would otherwise be members of the combined group, but ~~which~~ have no taxable presence in Illinois or that~~which~~ cannot be combined for any other reason, are not considered in this determination. In determining whether a combined group is primarily engaged in retailing, gross receipts from transactions between eligible members of the combined group are~~shall be~~ eliminated from both the numerator and the denominator of the computation. In determining whether a combined group is primarily engaged in manufacturing or in the mining of coal or fluorite, gross receipts from manufacturing or the mining of coal or fluorite ~~shall~~ include:

A) gross receipts from sales of products manufactured or coal or fluorite mined by one eligible member of the combined group to another eligible member of the combined group for use or consumption, and not for resale. However, ~~provided, however, that~~ the amount of those gross receipts is~~shall be~~ subject to adjustment by the Department under ~~the provisions of~~ IITA Section 404; and

B) gross receipts from sales to persons outside the combined group by one eligible member of the combined group of items manufactured, or coal or fluorite mined, by another eligible member of the combined group.

4) The additional credit provided in IITA Section 201(e) and the credit provided in IITA Section 201(g) are based on specified increases in employment in Illinois. For purposes of determining entitlement to these credits during a combined-return year, the increase in employment is~~shall be~~ determined with respect to the employment of all members of the combined group in Illinois and not an individual member's employment. For purposes of determining the increase in employment in Illinois for a common taxable year, the Illinois employment of all taxpayers who are

members of the combined group during that common taxable year is~~shall be~~ used; that is, both prior and current year Illinois employment of current members who were not members of the combined group in the prior year are~~shall be~~ included in the determination, while prior and current year Illinois employment of taxpayers who ceased to be members of the combined group during the current or prior year are~~shall be~~ excluded. The application of this subsection (d)(4) is illustrated by the following examples:

EXAMPLE 1:~~.~~

Corporations A, B and C were members of a unitary business group that~~which~~ elected to file a combined return for 1989. Corporation D was not a member of the ABC combined group in 1989, but becomes a member of combined group ABCD filing a combined return for 1990. During 1989, Corporations A, B and C employed a total of 150 persons in Illinois and Corporation D employed 50 people in Illinois, for a total of 200.

During 1990, Corporations A, B and C employed 100 persons in Illinois and Corporation D employed 100 persons in Illinois, again for a total of 200.

IITA Section 201(e), which provides for a Replacement Tax Investment Credit for qualified property placed in service by the taxpayer during the year, allows an additional 0.5% credit for that property to a taxpayer whose Illinois employment has increased by at least 1% over its Illinois employment in the immediately preceding year. Combined group ABCD cannot qualify for the additional 0.5% credit during 1990 because the combined Illinois employment of Corporations A, B, C and D remained unchanged between 1989 and 1990. Because eligibility is determined at the combined group level, no additional credit is~~can be~~ allowed for qualified property placed in service by Corporation D in 1990, even though Corporation D's Illinois employment doubled between 1989 and 1990.

EXAMPLE 2:~~.~~

Corporations P, Q, R and S filed a combined Illinois return for calendar

year 1990. On January 1, 1991, Corporation S was sold to an unrelated purchaser. Corporations P, Q and R filed a combined Illinois return for calendar year 1991.

Combined group PQRS employed 400 people in Illinois during 1990, 100 of whom were actually employees of Corporation P and 100 of whom were actually employees of Corporation S. Combined group PQR employed 350 people in Illinois during 1991, 50 of whom were actually employees of Corporation P.

Combined group PQR can qualify for the additional 0.5% Replacement Tax Investment Credit allowed under IITA Section 201(e) for qualified property placed in service during 1990 because the Illinois employment of the three members of the combined group increased from 300 in 1989 to 400 in 1990. Because the eligibility is determined at the combined group level, property placed in service by Corporation P during 1990 may qualify for the additional 0.5% credit even though Corporation P's Illinois employment actually decreased.

EXAMPLE 3:

Prior to its 2013 repeal by Public Act 98-109, IITA Section 201(g) allowed a Jobs Tax Credit equal to $500 per eligible employee hired to work in an enterprise zone during a taxable year. The taxpayer must hire 5 or more eligible employees during the taxable year in order to qualify for the credit. The credit is taken in the taxable year following the year the employee is hired. Corporations W, X, Y and Z filed a combined Illinois return for calendar year 1990. Corporation Z was sold to an unrelated purchaser on December 31, 1990. Corporations W, X and Y filed a combined return for 1991.

During 1990, WXYZ hired 5 eligible employees to work in an enterprise zone, 3 of whom were actually hired by Corporation Z.
Combined group WXY may claim a Jobs Tax Credit of $2,500 for 1991 because it hired 5 eligible employees during 1990. The fact that Corporation Z, which hired 3 of the employees, left the combined group at the beginning of 1991 does not alter the fact that the combined group earned the Jobs Tax Credit nor entitle Corporation Z to any portion of the credit for its separate company return for 1991.

5) The research and development credit provided in IITA Section 203(j) is based on increasing research activities in this State (see Section 100.2160). For purposes of determining entitlement to the credit during a combined-return year, the increase in research activities is~~shall be~~ determined with respect to research activities conducted by all members of the combined group in Illinois and not an individual member's research activities. The following series of examples illustrate the application of the research and development credit in combined return situations involving Corporations A, B and C that incurred the following expenses for qualified research activities in Illinois:

	1990	1991	1992	1993
Corp. A	50,000	50,000	50,000	0
Corp. B	25,000	25,000	100,000	200,000
Corp. C	75,000	125,000	100,000	100,000
	150,000	200,000	250,000	300,000

~~A)~~EXAMPLE 1:~~.~~ A, B, and C filed combined returns for the years ending December 31, 1990, December 31, 1991, December 31, 1992 and December 31, 1993. The proper amount of the Research and Development Credit for the year ending December 31, 1993 is determined based upon the combined activities on the combined return and is calculated as follows:

Total qualified expenditures for 1993 300,000

Average qualified expenditures for 1990-92 200,000

Excess of 1993 expenditures over base period 100,000

Research and development credit for 1993 6,500

~~B)~~EXAMPLE 2:~~.~~ A and B filed a combined return for the year ending December 31, 1990. C filed a separate return for the year ending December 31, 1990. A purchased the common stock of C on January 1, 1991. A, B and C filed combined returns for the years ending December 31, 1991, December 31, 1992 and December 31, 1993. The $75,000 of

expenses for qualified research activities in Illinois incurred by C for the year ending December 31, 1990 should be included in the calculation of the average qualified expenditures for the base period. The credit for the combined return is~~would be~~ calculated as follows:

Total qualified expenditures for 1993 300,000

Average qualified expenditures for 1990-92 200,000

Excess of 1993 expenditures over base period 100,000

Research & Development Credit for 1993..... 6,500

~~C)~~EXAMPLE 3:~~.~~A, B and C filed combined returns for the years ending December 31, 1990, December 31, 1991 and December 31, 1992. On January 1, 1993, A sold the common stock of C to P (an unrelated corporation). For the year ending December 31, 1993, C was included in the combined return filed by P. In determining the proper amount of the Research and Development Credit for the combined return filed by A and B for the year ending December 31, 1993, the expenses for qualified research activities in Illinois incurred by C of $75,000, $125,000 and $100,000 for the years ending December 31, 1990, December 31, 1991 and December 31, 1992, respectively, are not~~may not be~~ included in the calculation of the average qualified expenditures for the base period for A and B for the year ending December 31, 1993. The credit for the combined return for A and B for the year ending December 31, 1993 is~~would be~~ calculated as follows:

Total qualified expenditures for 1993 200,000

Average qualified expenditures for 1990-92 100,000

Excess of 1993 expenditures over base period 100,000

Research & Development Credit for 1993..... 6,500

6) Credit Carryforward. Any combined credit carryforward is~~shall be~~ available to the combined group for the next combined-return year. For purposes of the credits allowed with respect to certain qualifying property

under IITA Sections 201(e), (f), and (h) and 206(b), where a member becomes ineligible to join in the election, or is no longer required to be part of the combined return, the credit carryforward is~~shall be~~ available to the remaining members if those members continue to both own and use the property for which the credit was claimed in a qualifying manner for 48 months after the placed-in-service date. The credit carryforward is~~shall be~~ available to the former member that has become ineligible if that former member both owns and uses the property for which the credit was claimed in a qualifying manner for the remainder of the 48-month period after the placed-in-service date. If a credit carryforward is available to the former member that has become ineligible, the amount of the carryforward is equal to the combined unused credit multiplied by a fraction, the numerator of which is the credit attributable to the qualified property of that former member for the combined unused credit year, and the denominator of which is the qualified property of the combined group for the unused credit year.

EXAMPLE:~~1.~~ In 1985, Corporation A purchased $300,000 of eligible property, $200,000 of which was used by A and $100,000 of which was transferred to and used by Corporation B. A and B filed a combined return for that year which showed an income tax liability of $1,000 and an investment credit of $1,500. The group's unused credit was $500. In 1987, B left the group, and during that year it owned and continued to use the $100,000 of eligible property. Its credit carryforward is~~would be~~ computed as follows:

$500 x $100,000/$300,000 = $166.67

7) Recapture. For purposes of credits which are recaptured when property ceases to be qualified property or is moved out of Illinois or when property is moved outside of an enterprise zone within 48 months of the placed-in-service date, the members of the combined group are responsible for the recapture of any personal property replacement tax or income tax.

EXAMPLE:~~2.~~ Same facts as in the Example 1 in subsection (d)(6) except in 1987 Corporation A transferred its eligible property (originally purchased for $200,000, in 1985) to Corporation B. Corporation B was acquired by Corporation C in 1987 and, immediately afterward, B sold all

the eligible property (originally purchased for a total of $300,000) to an unrelated third party. B and C file a combined return for that year and ~~they must increase~~ their tax liability is increased by $1,000 due to the credit that was allowed on the combined return filed by A and B in 1985 and is recaptured in 1987.

e) Ineligible Members. If a unitary business group contains one or more ineligible members (e.g., a partnership that is not required to apply the apportionment method prescribed in Section 100.3380(d), a subchapter S corporation~~Corporation~~ or, for years ending prior to December 31, 1987, a corporation with a different taxable year), the ineligible members-shall file separate unitary returns. In the separate unitary return, the apportionment percentage of that ineligible member is~~shall be~~ determined by dividing the Illinois factor or factors of that member by the combined everywhere factor or factors of all members of the unitary business group. The apportionment percentage is~~shall~~ then ~~be~~ multiplied by the combined business income of the unitary business group to determine the business income of that ineligible member apportionable to Illinois. The taxable income of the members is~~shall be~~ their combined taxable income as determined under subsection (a)(1). If a corporation is ineligible because it has a different taxable year, ~~it shall use~~ either method of accounting available to part-year members and set forth in subsection (f)(2) may be used to determine the combined taxable income. If two or more corporations are ineligible because they have an accounting period that is different from other members making the election, they may elect to file their own combined return if they have the same taxable year. The foregoing rule also applies in the case of erroneous inclusion of a member in a group otherwise required to file a combined return.

f) Part-year Members

1) General Rule. If a corporation becomes a member of a unitary business group after the beginning of the combined return year or ceases to be a member of the unitary business group during the combined return year, two tax returns will be affected for that taxable year. The combined return includes~~shall include~~ the separate company items of that corporation for the part of the year it was a member of the unitary business group. Separate company items of a part-year member for any portion of its taxable year prior to the date it joins or after the date it leaves the unitary business group are~~shall either be~~ reported in a short-year separate return filed by that part-year member (if it is subject to Illinois income tax during

that period) or included in any combined return filed on behalf of a unitary business group to which that part-year member belongs during that portion of the year.

2) Accounting. The part-year member may~~shall~~ use either Method 1 or Method 2 (described in Section 100.5265(b)) to determine its separate company items for the portion of the year before it becomes a member and the portion of the year after it becomes a member of the combined group.

(Source: Amended at 43 Ill. Reg. _____, effective _____)

SUBPART EE: DEFINITIONS

Section 100.9700 Unitary Business Group Defined (IITA Section 1501)

a) Scope
This Section~~regulation~~ is designed to clarify the meaning of IITA Section 1501(a)(27), defining "unitary business group". This~~, which~~ definition became effective for tax years ending on or after December 31, 1982.

b) Persons Required to Use Combined Apportionment~~required to use combined apportionment~~
Any person subject to Illinois income taxation may be a member of a unitary business group that uses~~and required to use~~ combined apportionment under IITA Section 304(e). Only corporations~~Corporations~~ (other than subchapter~~Subchapter~~ S corporations) who are members of a unitary business group ~~are required to~~ file combined returns under IITA Section 502(e). For the treatment of certain partners and partnerships engaged in a unitary business, see Section 100.3380(d) ~~of this Part~~. Every member of a unitary business group who is neither a corporation that joins~~required to join~~ in a combined return nor a partnership excluded from combined apportionment under Section 100.3380 determines~~of this Part shall determine~~ the Illinois portion of its business income pursuant to IITA Section 304(e) by computing the combined business income of the unitary business group in the manner prescribed in Section 100.5270(a)~~ of this Part~~, and apportioning that~~such~~ unitary business income to Illinois using the combined "everywhere" apportionment factors of the unitary business group and that person's own "Illinois" apportionment factors. If one or more other members of the unitary business group have taxable years different from the taxable year of the taxpayer filing the return, that taxpayer computes~~shall compute~~ the combined

business income of the group for its taxable year by including the incomes of the members using a different taxable year in the manner prescribed by Section 100.5265~~ of this Part~~.

c) The 80/20~~80-20~~ U.S. Business Activity Test for Prospective Members of a Unitary Business Group~~business activity test for prospective members~~
The factors to be used in determining whether 80% or more of a person's business activity is conducted outside the United States are~~shall be~~ gross figures without eliminations premised on the person's membership in any unitary business group. However, the factors should relate to the common taxable year, as defined in Section 100.5265~~ of this Part~~, of the unitary business group of which the person being tested could become a member were the person's business activity found to be less than 80% outside the United States. The factors to be used are as follows:

1) persons who~~required to~~ apportion business income under IITA Section 304(a) will use property and payroll,

2) persons who~~required to~~ apportion business income under IITA Sections 304(b), ~~304~~(c) or ~~304~~(d) will use the respective factors prescribed in those provisions.

A) For taxable years ending prior to December 31, 2017~~In accordance with IITA Section 102 and 26 USC 7701(b)(9)~~, *the phrase "United States" as used in IITA Section 1501(a)(27) includes~~shall include~~ only the 50~~fifty~~ states and the District of Columbia~~.~~, but does not include any territory or possession of the United States or any area over which the United States has asserted jurisdiction or claimed exclusive rights with respect to the exploration for or exploitation of natural resources. For taxable years ending on or after December 31, 2017, the phrase "United States", as used in IITA Section 1501(a)(27), means only the 50 states, the District of Columbia, and any area over which the United States has asserted jurisdiction or claimed exclusive rights with respect to the exploration for or exploitation of natural resources, but does not include any territory or possession of the United States*. (IITA Section 1501(a)(27)(B)) Areas over which the United States has asserted jurisdiction and claimed exclusive rights with respect to the exploration for or exploitation of natural resources include the outer continental shelf. (See IRC section 638 and 43 USC 1331)

B) Mechanically, the computation of the 80/20~~80-20~~ U.S. business activity test involves~~requires~~ the formation of one or two fractions, as the case may be, and the subsequent averaging of those fractions to arrive at an overall U.S. business activity in relation to world-wide business activity. The numerators of the fraction represents U.S. property, U.S. payroll, U.S. revenue miles or other transportation company factors, insurance premiums on property or risk in the U.S. or financial organization business income from sources within the U.S.; the respective denominators are world-wide figures.

C) In the case of a person who would be a member of a unitary business group for only part of a taxable year if less than 80% of its business activities were conducted outside the United States, the 80/20~~80-20~~ U.S. business activity test is~~shall be~~ applied only to that part of the person's taxable year for which the prospective member otherwise qualifies for membership in the unitary business group. If that person is a corporation and is a prospective member of a unitary business group required to file combined returns under IITA Section 502(f), the 80/20~~80-20~~ U.S. business activity test is~~shall be~~ applied only to that part of the combined group's common taxable year for which that person otherwise qualifies for membership in the combined group.

d) Taxpayers Using Different Apportionment Formulas~~Entities using different apportionment formulas~~ under IITA Section 304

1) Prior to December 31, 2017

A) For taxable years ending prior to December 31, 2017, only taxpayers who use the same apportionment formula under IITA Section 304 may be members of the same unitary business group.~~All members of a unitary business group must be eligible under IITA Section 304 to use the same apportionment formula.~~ As a consequence, a corporation that uses~~required to use~~ the three factor apportionment formula of IITA Section 304(a):

i) is not~~cannot be~~ a member of the same unitary group as a

corporation that uses~~required to use~~ the one factor apportionment formula of IITA Section 304(c);~~,~~ nor

ii) is~~may~~ a corporation that uses~~required to use~~ the one factor apportionment formula of IITA Section 304(c) ~~be~~ a member of the same unitary business group as a corporation that uses~~required to use~~ the one factor apportionment formula of IITA Section 304(b).

B) The proper method for determining unitary business group memberships under IITA Section 1501(a)(27) is:

i) first, to identify all entities that are related through common ownership and engaged in either horizontally or vertically integrated enterprises with the requisite exercise of strong centralized management; and

ii) second, to create from the population of entities thus identified:

- one unitary business group composed of entities required to apportion under IITA Section 304(a);~~,~~

- one unitary business group composed of entities required to apportion under IITA Section 304(b);~~,~~

- one unitary business group composed of entities required to apportion under IITA Section 304(c);

- one unitary business group composed of entities required to apportion under IITA Section 304(c-1); and

- one unitary business group composed of entities required to apportion under IITA Section 304(d).

2) After December 31, 2017
For taxable years ending on or after December 31, 2017, all taxpayers may be included in the same unitary business group without regard to the

apportionment formula used by any of the taxpayers under IITA Section 304.

~~2)~~ EXAMPLE: ~~A)FACTS:~~For the taxable year ending December 31, 2016, Corporation A owns all of the outstanding common stock of Corporations B and C. Corporations B and C each own 30% of the outstanding common stock of Corporation D. Corporation D owns 60% of the outstanding common stock of Corporation E. Corporation A is a mining company operating exclusively in Illinois. Corporation D is a manufacturing company with factories in Illinois and Indiana. Corporation C is an insurance company earning premiums for insuring property and risks located in Illinois and Indiana. Corporation B is an air freight company and Corporation E is a trucking company, both operating nationwide. In their relationships to one another, the five companies: are "steps in a vertically structured enterprise or process" and are "functionally integrated through the exercise of strong centralized management." ~~B)ANALYSIS AND CONCLUSION:~~As a result of these facts, Corporations A and D, which would ~~ordinarily be required to~~ apportion business income using the formula in~~by means of the three factor apportionment formula of~~ IITA Section 304(a), will constitute one unitary business group; Corporations B and E, which would ~~ordinarily be required to~~ apportion business income using the transportation company formula in~~by means of the one factor transportation formula~~ IITA Section 304(d), will constitute a second unitary business group; and Corporation C will compute its liability on a non-combined apportionment basis using the insurance company formula in~~under~~ IITA Section 304(b).

e) Common Ownership~~ownership~~

In the case of a corporation, common ownership means direct or indirect control or ownership of more than 50% of the corporation's outstanding voting stock. In the case of any other entity, common ownership means direct or indirect ownership of an interest sufficient to exercise control over the activities of the entity. For example, ownership of a general partnership interest gives the partner the authority to act on behalf of the partnership and bind the partnership, regardless of actual ownership share. (See Section 9 of the Uniform Partnership Act [805 ILCS 205/9]). Accordingly, a general partner in any partnership has an interest in the partnership sufficient to establish common ownership. Insofar as corporations are concerned, a person~~one~~ has direct ownership of the outstanding voting stock of the corporation~~another~~ to the extent that person~~it~~ owns the~~such~~

stock, and indirect control to the extent that person~~it~~ owns the voting stock of a another~~third~~ corporation that itself owns ~~such~~ stock in the first corporation. Any combination of direct and indirect control or ownership aggregating more than 50% will suffice to qualify the corporation whose stock is owned for membership in the unitary business group if the other tests unrelated to ownership are met.

~~1)~~EXAMPLE 1: Corporation A owns 60% of the outstanding voting stock of Corporation B that,~~which~~ in turn, owns 60% of the outstanding voting stock of Corporation C. There is common ownership of Corporations A, B and C by reason of Corporation A's direct ownership of more than 50% of the outstanding voting stock of Corporation B and indirect control of more than 50% of the outstanding voting stock of Corporation C.

~~2)~~EXAMPLE 2: Corporation A owns 60% of the outstanding voting stock of Corporation B and 60% of the outstanding voting stock of Corporation C. Corporations B and C in turn each own 30% of the outstanding voting stock of Corporation D. Corporations A, B, C and D are all under common ownership by reason of Corporation A's direct ownership of more than 50% of the outstanding voting stock of Corporations B and C and by reason of Corporation A's indirect control of more than 50% of the outstanding voting stock of Corporation D.

~~3)~~EXAMPLE 3: Corporation A owns 60% of the outstanding voting stock of Corporation B and 40% of the outstanding voting stock of Corporation C. Corporations B and C each in turn own 30% of the outstanding voting stock of Corporation D. Corporations A and B are under common ownership by reason of Corporation A's direct ownership of more than 50% of the outstanding voting stock of Corporation B, but neither Corporations C or D are under common ownership with Corporations A and B because neither Corporation A nor Corporation B has direct or indirect control or ownership of more than 50% of the outstanding voting stock of Corporations C or D.

~~4)~~EXAMPLE 4: Corporation A owns 60% of the outstanding voting stock of Corporation B and 40% of the outstanding voting stock of Corporation C. Corporation B owns 30% of the outstanding voting stock of Corporation D and Corporation C owns 60% of the outstanding voting stock of Corporation D. Corporations A and B are under common ownership by reason of the fact that Corporation A owns more than 50% of the outstanding voting stock of Corporation B, and Corporations C and D are under separate common ownership by reason of the fact that Corporation C owns more than 50% of the outstanding

voting stock of Corporation D.

f) Attribution of Stock Ownership Among Certain Persons~~stock ownership among certain persons~~
For the purpose of IITA Section 1501(a)(27), a person is~~shall be~~ considered to have indirect control over any stock that that person is considered as owning under IRC section 318(a).

EXAMPLE: Strictly as an investment, Mr. X and his wife, Mrs. X, each individually own 30% of the outstanding voting stock of Corporation A and 30% of the outstanding voting stock of Corporation B. Corporations A and B are under common ownership within the meaning of Section 1501(a)(27), and assuming that they meet the other requirements of IITA Section 1501(a)(27), they will be members of the same unitary business group. The common ownership stems from the fact that, under IRC section 318(a)(1), the stock holdings of Mr. X are imputed to his wife and vice versa. Note that it is not necessary in order for Corporations A and B to be members of a unitary business group that the "person" in whom the common ownership is embodied also be a member of the unitary business group.

g) Strong Centralized Management~~centralized management~~
Under IITA Section 1501(a)(27), no group of persons can be a unitary business group unless they are functionally integrated through the exercise of strong centralized management. It is this exercise of strong centralized management that is the primary indicator of mutual dependency, mutual contribution and mutual integration between persons that is necessary to constitute them members of the same unitary business group. The exercise of strong centralized management is~~will be~~ deemed to exist when~~where~~ authority over such matters as purchasing, financing, tax compliance, product line, personnel, marketing and capital investment is not left to each member. Thus, some groups of persons may properly be considered as constituting a unitary business group under IITA Section 1501(a)(27) when the executive officers of one of the persons are normally involved in the operations of the other persons in the group and there are centralized units that perform for some or all of the persons functions that truly independent persons would perform for themselves. Note in this connection that neither the existence of central management authority, nor the exercise of that authority over any particular function (through centralized operations), is determinative in itself; the entire operations of the group must be examined in order to determine whether or not strong centralized management exists. A

finding of "strong centralized management" is not~~cannot be~~ supported merely by showing that the requisite ownership percentage exists or that there is some incidental economic benefit accruing to a group because the~~such~~ ownership improves its financial position. Only if both~~Both~~ elements of strong centralized management, i.e., strong central management authority and the exercise of that authority through centralized operations, are~~must be~~ present will~~in order for~~ persons ~~to~~ be a unitary business group under IITA Section 1501(a)(27). Finally, a finding of strong centralized management can be supported even though the authority resides in a person that is not a member of the group, provided that the authority is actually exercised by that~~such~~ person.

h) General Line of Business and Vertically Structured Enterprises ~~line of business and vertically structured enterprises~~

1) IITA Section 1501(a)(27)~~ of the Act~~ establishes that persons meeting all of the other tests for inclusion in a unitary business group, including common ownership, strong centralized management and comparability of apportionment method, will ordinarily be in one of the following relationships to one another:

A) in the same general line of business;~~,~~ or

B) steps in a vertically structured enterprise or process.

2) IITA Section 1501(a)(27) recites that two persons will ordinarily be considered to be in the same general line of business if they are both involved in one of the following activities:

A) manufacturing;

B) wholesaling;

C) retailing;

D) insurance;

E) transportation;~~,~~ or

F) finance.

3) IITA Section 1501(a)(27) does not contemplate that the ~~above~~ list in subsection (h)(2) is~~be~~ exclusive. For example, two persons that are both involved in rendering services to the public would ordinarily be considered to be in the same general line of business. In this regard, a retailer that renders services that are incidental to its retail business is not~~will not be~~ in the same general line of business as a person that is primarily a provider of that same type of service~~ dispenser~~.

4) It is not a requirement of IITA Section 1501(a)(27) that the activities of the two persons in whichever category is applicable relate to the same product or product line in order for the two persons to be in the same general line of business.

5) Two persons are steps in a vertically structured enterprise or process under IITA Section 1501(a)(27) even though other persons who are also steps in that enterprise or process are not members of the same unitary business group because of the intervention of: the 80/20~~80-20~~ U.S. business activity test or the rules stated in subsection (d)~~ of this Section~~, relating to the comparability of apportionment formulas of members of a unitary business group.

EXAMPLE~~ 1~~: ~~A)FACTS:~~ Corporation A manufactures furniture. Corporation C retails the furniture manufactured by Corporation A. Corporation B is a furniture finisher and wholesaler operating exclusively in Mexico that~~which~~ purchases Corporation A's unfinished furniture, applies the appropriate finishing materials in its Mexican plants, and sells the finished furniture to Corporation C. ~~B)ANALYSIS AND CONCLUSION:~~ Corporations A and C are steps in a vertically structured enterprise and therefore~~as such~~ can be members of the same unitary business group. They do not lose their status as steps in a vertically structured enterprise by reason of the fact that they never directly deal with one another~~,~~ since they both deal with Corporation B, which is also a step in the vertically structured enterprise and ~~which~~ would be a member of the unitary business group if the other tests for a unitary business were met~~were it not for the intervention of the 80/20 U.S. business activity test~~.

6) A person is not~~will not be~~ a step in a vertically structured enterprise or process unless it is connected to one or more other persons that are steps in

the vertically structured enterprise or process by a flow of goods or services, including management services, to itself or from itself. However, if the flow of goods or service is present with respect to a particular person, that person's status as a step in the vertically structured enterprise or process does~~shall~~ not depend on the relationship between the price at which this flow exists and the fair market price at which this flow would exist in an arm's length transaction.

EXAMPLE ~~2~~: ~~A)FACTS:~~Same facts as in the previous example, except that Corporation A can establish that it sells its unfinished furniture to Corporation B at a fair market arm's length price and Corporation C can establish that it purchases the finished furniture from Corporation B at a fair market arm's length price. ~~B)ANALYSIS AND CONCLUSION:~~Even with their respective showings that the flow of furniture connecting them to Corporation B existed at an arm's length price, Corporations A and C are still steps in a vertically structured enterprise and can still be members of the same unitary business group.

(Source: Amended at 43 Ill. Reg. _____, effective _____)

DEPARTMENT OF REVENUE

NOTICE OF PROPOSED AMENDMENTS

Section 100.APPENDIX A Business Income of Persons Other Than Residents (Repealed)

Section 100.TABLE A Example of Unitary Business Apportionment (Repealed)

~~Example: Corporations A, B and C are engaged in the conduct of a unitary business. All three corporations are doing business both within and without Illinois. For purposes of this example, it will be assumed that all of the income of the corporations is business income, that there are no applicable addition or subtraction modifications (see IITA Section 203(b)(2)), and, that none of the corporations derives income from a partnership. It is further assumed that none of the three corporations is a financial organization, transportation company or insurance company. In addition, it is assumed that there were no intercompany transactions. Based on A's, B's and C's records, the computation of each company's share of the unitary business income to be apportioned to Illinois would be as follows:~~

	~~Corporation A~~	~~B~~	~~Corporation C~~	~~Corporation Combined~~
~~Business Income~~	~~$ 20,000~~	~~$ 30,000~~	~~$ 40,000~~	~~$ 90,000~~
~~Illinois Property~~	~~50,000~~	~~25,000~~	~~25,000~~	
~~Total Property~~	~~75,000~~	~~50,000~~	~~75,000~~	~~200,000~~
~~Property Factor[1]~~	~~.25~~	~~.125~~	~~.125~~	
~~Illinois Payroll~~	~~10,000~~	~~20,000~~	~~30,000~~	
~~Total Payroll~~	~~20,000~~	~~30,000~~	~~50,000~~	~~100,000~~
~~Payroll Factor[2]~~	~~.1~~	~~.2~~	~~.3~~	
~~Illinois Sales~~	~~50,000~~	~~75,000~~	~~80,000~~	
~~Total Sales~~	~~150,000~~	~~100,000~~	~~250,000~~	~~500,000~~
~~Sales Factor[3]~~	~~.1~~	~~.15~~	~~.16~~	
~~Average~~	~~.15~~	~~.158333~~	~~.195~~	
~~Business Income Apportioned to Illinois[4]~~	~~$ 13,500~~	~~$ 14,250~~	~~$ 17,550~~	

~~Note[1] This decimal is derived by dividing each member's Illinois property by the combined total property; i.e., for A, this is $50,000 divided by $200,000.~~

~~Note[2] This decimal is derived by dividing each member's Illinois payroll by the combined total payroll, i.e., for A, this is $10,000 divided by $100,000.~~

~~Note[3] This decimal is derived by dividing each member's Illinois sales by the combined total sales; i.e., for A, this is $50,000 divided by $500,000.~~

DEPARTMENT OF REVENUE

NOTICE OF PROPOSED AMENDMENTS

~~Note[4] This amount is determined by multiplying the combined business income ($90,000) by the average of the three factors for each member. For A, this is .15 times $90,000.00. Note that the provisions of P.L. 86-272 remain applicable. In instances where one member of the group may come within the protection of P.L. 86-272, i.e., where the activities of the corporation with regard to sales of tangible personal property do not give rise to sufficient tax nexus, those sales will not be included in the numerator of the sales factor for that member. Nonetheless, those sales, to the extent arising out of the group's unitary business activity will be shown in the denominator and will be part of the combined apportionment formula. In utilizing the combined method of apportionment, members of a unitary group filing Illinois income tax returns will be required to disclose, in colunmar form, all items of income, credit, deduction or exclusion which would enter into the computation of base income under the Illinois Income Tax Act as if each member of the group were required to file an Illinois income tax return. In some instances, it will also be necessary to disclose the computation of federal taxable income even where a particular member may not be required to file a federal income tax return. Appropriate schedules for this purpose will be provided. Essentially, the schedules will require, for each member of the group:~~

~~(A) the construction of federal taxable income or its equivalent;~~

~~(B) the computation of Illinois base income or its equivalent;~~

~~(C) disclosure and explanation of intercompany eliminations;~~

~~(D) classification of income as business or nonbusiness income;~~

~~(E) the appropriate apportionment factors;~~

~~(F) and, for those members required to file an Illinois income tax return the computation of Illinois base income which will include the member's apportioned share of unitary business income as well as any other income allocable or apportionable to Illinois.~~

(Source: Repealed at 43 Ill. Reg. _____, effective _____)

DEPARTMENT OF REVENUE

NOTICE OF PROPOSED AMENDMENTS

Section 100.APPENDIX A Business Income of Persons Other Than Residents (Repealed)

Section 100.TABLE B Example of Unitary Business Apportionment for Groups Which Include Members Using Three-Factor and Single-Factor Formulas (Repealed)

~~Example: Corporation A is engaged in the manufacture and sale of tangible personal property. Corporation B, a wholly-owned subsidiary of A, is a financial organization. The operations of A and B are unitary and both corporations operate both within and without Illinois. For purposes of simplicity, assume that there are no intercompany transactions. Consistent with the provisions of the Illinois Income Tax Act, and the combined method of apportionment utilized in Illinois, A determines that its net unitary business income is $45,000. B, likewise, determines that its net unitary business income is $15,000. The reflection of the factors discussed above would result in the following combined apportionment schedule entries, assuming accurate disclosure of information contained thereon:~~

	~~Corporation A~~	~~Corporation B~~	~~Combined~~
~~Business income~~	~~$ 45,000~~	~~$ 15,000~~	~~$ 60,000~~
~~Illinois property~~	~~1,000~~		
~~Total property~~	~~10,000~~	~~10,000~~	~~20,000~~
~~Property factor~~	~~.05[1]~~		
~~Illinois payroll~~	~~1,000~~		
~~Total payroll~~	~~10,000~~	~~90,000~~	~~100,000~~
~~Payroll factor~~	~~.01[2]~~		
~~Illinois sales~~	~~1,000~~	~~2,000[3]~~	
~~Total sales~~	~~80,000~~	~~20,000[4]~~	~~100,000~~
~~Sales factor[6]~~	~~.01~~	~~.02~~	
~~Average~~	~~.23333~~	~~.02[7]~~	
~~Business income apportioned to Illinois~~	~~1,400~~	~~1,200[8]~~	

~~Note[1] This property factor for A is A's Illinois property divided by property everywhere for both A and B as determined under the provisions of IITA Section 304(a). Note that B's "Illinois property" is not shown; B will use the single factor determined under IITA Section 304(c). B's "property everywhere" is shown only to arrive at the combined denominator used in the computation of A's property factor.~~

~~Note[2] This payroll factor for A is A's Illinois payroll divided by payroll everywhere for both A and B as determined under the provisions of IITA Section 304(a). Note that B's "Illinois~~

~~payroll" is not shown; B will use the single factor determined under IITA Section 304(c). B's "payroll everywhere" is shown only to arrive at the combined denominator used in the computation of A's payroll factor.~~

~~Note[3] This "Illinois sales" numerator for B is the numerator prescribed by IITA Section 304(c).~~

~~Note[4] This "total sales" denominator for B is the denominator prescribed by IITA Section 304(c).~~

~~Note[5] The combined "total sales" is the sum of the sales factor denominator prescribed by IITA Section 304(a) for A and the denominator prescribed by IITA Section 304(c) for B.~~

~~Note[6] This decimal is derived by dividing each member's Illinois sales by the combined total sales, or in the case of B, the numerator described by IITA Section 304(c) by the combined total sales. In the example, the combined total sales is the sum of the denominator determined for A in accordance with IITA Section 304(a) and the denominator determined for B in accordance with IITA Section 304(c).~~

~~Note[7] Since B is using a single-factor formula, the average (.02 divided by 1) is .02.~~

~~Note[8] This amount is determined by multiplying the combined business income ($60,000) by the average of the factors for each member. The same approach is to be followed where the unitary group includes an insurance company or a transportation company. In the case of an insurance company, the apportionment factor to be utilized is that prescribed in IITA Section 304(b). In the case of a transportation company, it will be necessary to convert the "revenue miles" apportionment factor of IITA Section 304(d) to dollar amounts. This is to be accomplished by dividing total gross receipts from transportation services by total revenue miles in order to arrive at a dollar amount for each "revenue mile". Thereafter, "Illinois revenue miles" (the numerator prescribed by IITA Section 304(d)), and "everywhere revenue miles" (the denominator prescribed by IITA Section 304(d)), will be multiplied by the dollar amount determined in accordance with the preceding sentence. The resulting fraction will then be utilized as described in the example shown above. It may be that this method of accounting for insurance companies, financial organizations and transportation companies within the context of combined apportionment may produce unreasonable results in particular cases. Where this occurs, the Director may require, or the taxpayer may petition for, an alternative method. See IITA Section 304(c) and 86 Ill. Adm. Code 100.3700(a).~~

(Source: Repealed at 43 Ill. Reg. _____, effective _____)

CAPITAL DEVELOPMENT BOARD

NOTICE OF ADOPTED REPEALER

1) Heading of the Part: Illinois Accessibility Code

2) Code Citation: 71 Ill. Adm. Code 400

3)

Section Numbers:	Adopted Actions:
400.110	Repealed
400.120	Repealed
400.130	Repealed
400.140	Repealed
400.150	Repealed
400.160	Repealed
400.170	Repealed
400.180	Repealed
400.210	Repealed
400.220	Repealed
400.310	Repealed
400.320	Repealed
400.330	Repealed
400.350	Repealed
400.360	Repealed
400.410	Repealed
400.420	Repealed
400.510	Repealed
400.520	Repealed
400.610	Repealed
400.620	Repealed
400.630	Repealed
400.710	Repealed
400.APPENDIX A	Repealed
400.ILLUSTRATION A	Repealed
400.ILLUSTRATION B	Repealed
400.ILLUSTRATION C	Repealed
400.ILLUSTRATION D	Repealed

4) Statutory Authority: Implementing and authorized by the Environmental Barriers Act [410 ILCS 25].

5) Effective Date of Repealer: October 23, 2018

CAPITAL DEVELOPMENT BOARD

NOTICE OF ADOPTED REPEALER

6) Does this rulemaking contain an automatic repeal date? No

7) Does this rulemaking contain incorporations by reference? Yes

8) A copy of the adopted repealer, including any material incorporated by reference, is on file in the Capital Development Board's principal office and is available for public inspection

9) Notice of Proposal published in the *Illinois Register*: 42 Ill. Reg. 2278; February 9, 2018

10) Has JCAR issued a Statement of Objection to this repealer? No

11) Difference between Proposal and Final Version: No changes were made to this repealer.

12) Have all the changes agreed upon by the Agency and JCAR been made as indicated in the agreements issued by JCAR? No changes were made.

13) Will this repealer replace an emergency rule currently in effect? No

14) Are there any other rulemakings pending on this Part? No

15) Summary and Purpose of Repealer: The Environmental Barriers Act requires CDB to update the 1997 Illinois Accessibility Code (IAC) and model the updates on the 2010 Federal ADA Standards for Accessible Design (ADA). The revised Code is being placed in its entirety in Appendix A so that the formatting can be maintained. This allows the Illinois' Code to resemble the ADA as much as possible.

The current IAC has Sections that are more stringent than the 2010 ADA. The EBA allows CDB to keep these more stringent Sections, which is why IAC varies from the ADA. Those variations include changes to the administrative Section to tie it to Illinois' Environmental Barriers Act, updates to Code and standard references, additional and modified definitions to keep the IAC consistent with our EBA and also to assist the Attorney General's Office with enforcement. Many other Sections were also altered which add language from our current IAC including requirements for historic facilities and multi-story housing buildings and facilities.

16) Information and questions regarding this adopted repealer shall be directed to:

Lisa Hennigh

CAPITAL DEVELOPMENT BOARD

NOTICE OF ADOPTED REPEALER

Capital Development Board
401 South Spring Street
3rd Floor Stratton Building
Springfield IL 62706

217/524-6408
email: lisa.hennigh@illinois.gov

fax: 217/524-4208

CAPITAL DEVELOPMENT BOARD

NOTICE OF ADOPTED RULES

1) Heading of the Part: Illinois Accessibility Code

2) Code Citation: 71 Ill. Adm. Code 400

3)

Section Numbers:	Adopted Actions:
400.110	New Section
400.120	New Section
400.APPENDIX A	New Section

4) Statutory Authority: Implementing and authorized by the Environmental Barriers Act [410 ILCS 25].

5) Effective Date of Rules: October 23, 2018

6) Does this rulemaking contain an automatic repeal date? No

7) Does this rulemaking contain incorporations by reference? Yes

8) A copy of the adopted rules, including any material incorported by reference, is on file in the Capital Development Board's principal office and is available for public inspection.

9) Notice of Proposal published in the *Illinois Register*: 42 Ill. Reg. 2448; February 9, 2018

10) Has JCAR issued a Statement of Objection to this rule? No

11) Difference between Proposal and Final Version: The Board made the following changes: added an additional reference to the International Building Code; made some clarifications with regard to toilet rooms; made a clarification to the alteration section; Made a clarification to the historic buildings section with respect to alterations; corrected grammatical and typographical errors; added an exception to entrances with respect to multi-story housing; made a clarification to the Emergency Warning System section with respect to multi-story housing; made a clarification to the storage section with respect to kitchen storage; made a clarification to the shower section; added the section on ovens from the previous Code; and removed Chapter 11 – Public Right-of-Way and all language within the Code associated with this.

12) Have all the changes agreed upon by the Agency and JCAR been made as indicated in the agreements issued by JCAR? Yes

CAPITAL DEVELOPMENT BOARD

NOTICE OF ADOPTED RULES

13) Will this rulemaking replace an emergency rule currently in effect? No

14) Are there any other rulemakings pending on this Part? No

15) Summary and Purpose of Rulemaking: The Environmental Barriers Act requires CDB to update the 1997 Illinois Accessibility Code (IAC) and model the updates on the 2010 Federal ADA Standards for Accessible Design (ADA). The revised Code is being placed in its entirety in Appendix A so that the formatting can be maintained. This allows the Illinois' Code to resemble the ADA as much as possible.

The current IAC contains Sections that are more stringent than the 2010 ADA. The EBA allows CDB to keep these more stringent Sections, which is why the IAC varies from the ADA. Those variations include changes to the administrative Section to tie it to Illinois' Environmental Barriers Act, updates to Code and standard references, additional and modified definitions to keep the IAC consistent with our EBA and also to assist the Attorney General''s Office with enforcement. Many other Sections were also altered that add language from our current IAC including requirements for historic facilities and multi-story housing buildings and facilities.

16) Information and questions regarding these adopted rules shall be directed to:

Lisa Hennigh
Capital Development Board
401 South Spring Street
3rd Floor Stratton Building
Springfield IL 62706

217/524-6408 office
lisa.hennigh@illinois.gov email
fax: 217/524-4208

The full text of the Adopted Rules begins on the next page:

CAPITAL DEVELOPMENT BOARD

NOTICE OF ADOPTED RULES

TITLE 71: PUBLIC BUILDINGS, FACILITIES, AND REAL PROPERTY
CHAPTER I: CAPITAL DEVELOPMENT BOARD
SUBCHAPTER b: ACCESSIBILITY STANDARDS

PART 400
ILLINOIS ACCESSIBILITY CODE

Section
400.110 Purpose
400.120 Standards Incorporated by Reference

400.APPENDIX A Illinois Accessibility Code

AUTHORITY: Implementing and authorized by the Environmental Barriers Act [410 ILCS 25].

SOURCE: Amended April 21, 1969; amended at 2 Ill. Reg. 52, p. 33, effective December 18, 1978; emergency amendment at 4 Ill. Reg. 9, p. 253, effective February 14, 1980, for a maximum of 150 days; amended at 4 Ill. Reg. 27, p. 208, effective June 24, 1980; emergency amendment at 4 Ill. Reg. 30, p. 1252, effective July 11, 1980, for a maximum of 150 days; amended at 5 Ill. Reg. 3797, effective March 31, 1981; codified at 8 Ill. Reg. 19922; former Part repealed at 12 Ill. Reg. 5243 and new Part adopted at 12 Ill. Reg. 5245, effective May 1, 1988; former Part repealed at 21 Ill. Reg. 5762 and new Part adopted at 21 Ill. Reg. 5764, effective April 24, 1997; emergency amendment at 21 Ill. Reg. 9781, effective July 10, 1997, for a maximum of 150 days; amended at 21 Ill. Reg. 14502, effective October 24, 1997; former Part repealed at 42 Ill. Reg. 19693 and new Part adopted at 42 Ill. Reg. 19696, effective October 23, 2018.

Section 400.110 Purpose

a) The purpose of this Illinois Accessibility Code (Code), as represented in Appendix A, is to implement the Environmental Barriers Act (EBA) [410 ILCS 25]. This Code is intended to establish minimum scoping and technical design requirements to ensure that the built environment in the State of Illinois is designed, constructed, and altered to be accessible to and usable by all, including individuals with disabilities.

b) This Code is also intended to resolve areas of difference between federal accessible design standards such as the Americans With Disabilities Act (ADA), standards for accessible design (28 CFR 36 (2010)) and the Code. The drafters of

this Code compared and primarily adopted the stricter of State or federal accessible design standards to provide the greatest access throughout the State.

Section 400.120 Standards Incorporated by Reference

a) The entirety of the Code, as adopted by the Capital Development Board pursuant to its rulemaking authority granted by Section 4 of the EBA, is contained in this Part, primarily Appendix A.

b) The Code, together with the EBA and the standards incorporated by reference in subsection (d), has the force and effect of law in the State of Illinois.

c) The Illinois Attorney General shall have the authority to enforce the Code in accordance with the EBA.

d) Incorporations by Reference

ANSI/BHMA. Copies of the referenced standards may be obtained from the Builders Hardware Manufacturers Association, 355 Lexington Avenue, 17th floor, New York NY 10017 (www.buildershardware.com).

ANSI/BHMA A156.10-1999, American National Standard for Power Operated Pedestrian Doors

ANSI/BHMA A156.19-2002, American National Standard for Power Assist and Low Energy Power Operated Doors

ASME. Copies of the referenced standards may be obtained from the American Society of Mechanical Engineers, Three Park Avenue, New York NY 10016 (www.asme.org).

ASME A17.1- 2013, Safety Code for Elevators and Escalators

ASME A18.1-2011, Safety Standard for Platform Lifts and Stairway Chairlifts

ASTM. Copies of the referenced standards may be obtained from the American Society for Testing and Materials, 100 Bar Harbor Drive, West Conshohocken PA 19428 (www.astm.org).

ASTM F 1292-13, Standard Specification for Impact Attenuation of Surfacing Materials within the Use Zone of Playground Equipment

ASTM F 1487-11, Standard Consumer Safety Performance Specification for Playground Equipment for Public Use

ASTM F 1951-09b, Standard Specification for Determination of Accessibility of Surface Systems under and around Playground Equipment

ICC/IBC. Copies of the referenced standard may be obtained from the International Code Council, 4051 Flossmoor Road, Country Club Hills IL 60478 (www.iccsafe.org).

International Building Code, 2015 Edition

NFPA. Copies of the referenced standards may be obtained from the National Fire Protection Association, 1 Batterymarch Park, Quincy MA 02169-7471, (www.nfpa.org).

NFPA 72, National Fire Alarm Code, 2013 Edition

National Park Service, U.S. Department of the Interior. Copies of the referenced standards may be obtained from the www.nps.gov/tps/standards/rehabilitation.htm or at your local library. It is also available from the Illinois Department of Natural Resources-Office of Land Management-Historic Preservation Division, One Natural Resources Way, Springfield IL 62702, www.dnr.illinois.gov.

Secretary of the Interior's Standards for Rehabilitation and Guidelines for Rehabilitating Historic Buildings (Revised 1992)

e) Materials incorporated by reference in this Section are incorporated as of the date specified and include no further amendments or editions.

CAPITAL DEVELOPMENT BOARD

NOTICE OF ADOPTED RULES

Section 400.APPENDIX A Illinois Accessibility Code

BOARD NOTE: In this Appendix A, italicization of text indicates that the Capital Development Board has adopted rules applicable in the State of Illinois that differ to some extent from the 2010 ADA Standards for Accessible Design. Defined terms are indicated by bold text.

CHAPTER 1: APPLICATION AND ADMINISTRATION

101 Purpose

101.1 General. *This document contains scoping and technical requirements for accessibility to* ***sites****,* ***facilities****,* ***buildings****, and* ***elements*** *by individuals with disabilities.*

101.2 Buildings and Facilities Covered. *This* ***Code*** *applies to all* ***public facilities*** *and* ***multi-story housing*** *as defined and governed by the* ***Environmental Barriers Act*** *and located, in whole or in part, within the legal geographic boundaries of the State of Illinois, unless specifically exempted in this Code.*

101.3 Applicability, General. *This* ***Code*** *is applicable when work involving new construction,* ***alterations****,* ***additions****,* ***historic preservation****, restoration, or* ***reconstruction*** *in whole or in part begins after the effective date of this* ***Code****. The* ***Code*** *becomes enforceable with the signing of a construction contract, issuance of an official authorization or permit for construction, or the start of construction, whichever occurs first.*

101.4 Applicability to Federally Financed Facilities. *The fact that a* ***building*** *or* ***facility*** *governed by the* ***Environmental Barriers Act*** *is also a* ***facility*** *financed by federal funds is no bar to the application of this* ***Code****.*

101.5 Force of Law. *This* ***Code****, together with the* ***Environmental Barriers Act*** *and the standards incorporated by reference identified in Section 105, has the force of a building code and as such is law in the State of Illinois.*

101.6 Enforcement. *The Attorney General shall have the authority to enforce this* ***Code*** *in accordance with Section 6 of the* ***Environmental Barriers Act****. The Attorney General may investigate any complaint or reported violation of the* ***Environmental Barriers Act*** *and, where necessary to ensure compliance, may do any of the following:*

1. Conduct an investigation to determine if a violation of the ***Environmental Barriers Act*** *and this* ***Code*** *exists. This includes the power to:*

a. Require an individual or entity to file a statement or report in writing under oath or otherwise, as to all information the Attorney General may consider;

b. Examine under oath any person alleged to have participated in or with knowledge of the violations; and

c. Issue subpoenas or conduct hearings in aid of any investigation.

*2. Bring an action for injunction to halt construction or alteration of any **public facility** or **multi-story housing** or to require compliance with this **Code** by any **public facility** or **multi-story housing** which has been or is being constructed or altered in violation of the **Environmental Barriers Act** and this **Code**.*

3. Bring an action for mandamus.

4. Bring an action for penalties as follows:

*a. Any **owner** of a **public facility** or **multi-story housing** in violation of the **Environmental Barriers Act** shall be subject to civil penalties in a sum not to exceed $250 per day, and each day the **owner** is in violation of the **Environmental Barriers Act** constitutes a separate offense;*

*b. Any **architect** or **engineer** negligently or intentionally stating pursuant to Section 5 of the **Environmental Barriers Act** that a plan is in compliance with the **Environmental Barriers Act** when such plan is not in compliance shall be subject to a suspension, revocation, or refusal of restoration of his or her certificate of registration or license pursuant to the **Illinois Architecture Practice Act of 1989**, the **Professional Engineering Practice Act of 1989**, and the **Structural Engineering Practice Act of 1989**; and*

*c. Any person who knowingly issues a building permit or other official authorization for the construction or alteration of a **public facility** or the construction of **multi-story housing** in violation of the **Environmental Barriers Act** shall be subject to civil penalties in a sum not to exceed $1,000.*

*5. Bring an action for any other appropriate relief, including, but not limited to, in lieu of a civil action, the entry of an Assurance of Voluntary Compliance with the individual or entity deemed to have violated the **Environmental Barriers Act**.*

***101.6.1 Continuity of Violation.** A **public facility** or **multi-story housing** continues to be in violation of the **Environmental Barriers Act** and this **Code** following construction or alteration so long as the **public facility** or **multi-story housing** is not compliant with the **Environmental Barriers Act** and this **Code**.*

***101.7. Local Standards.** The provisions of the **Environmental Barriers Act** and this **Code** constitute minimum requirements for all **governmental units**, including home rule units. Pursuant to Section of the, **Environmental Barriers Act**, any **governmental unit** may enact more*

*stringent requirements to increase and facilitate access to the **built environment** by individuals with disabilities.*

101.8 Revisions to Code. *This **Code** may be revised from time to time by the Capital Development Board in accordance with the **Illinois Administrative Procedure Act [5 ILCS 100]** and Section 4 of the **Environmental Barriers Act**.*

101.9 Permits/Statement of Compliance. *Where permits are required for the construction or alteration of any **public facility** or **multi-story housing** unit, the plans and specifications submitted by the **owner** to obtain such a permit shall be examined for compliance with this **Code** by the **administrative authority** which issues the permit for construction.*

101.9.1 Filing. *Section 5(d) of the **Environmental Barriers Act** requires a Statement of Compliance by the **architect/engineer** unless the cost of construction or alteration is less than $50,000. For **privately owned** work it shall be filed with the local **administrative authority** or, in the absence of an **administrative authority**, with the County Clerk. For **publicly-owned** work, it shall be filed with the **governmental unit** contracting for the work.*

101.9.2 Content and Signature. *The Statement of Compliance shall be worded as follows and signed by the **architect/engineer**:*

STATEMENT OF COMPLIANCE

*I have prepared, or caused to be prepared under my direct supervision, the attached plans and specifications and state that, to the best of my knowledge and belief and to the extent of my contractual obligation, they are in compliance with the **Environmental Barriers Act** [410 ILCS 25] and the Illinois Accessibility Code (71 Ill. Adm. Code 400).*
Signed: (Architect/Engineer)

SEAL ILLINOIS REGISTRATION NO:
Date:

101.9.3 Alternative to Statement of Compliance. *The seal of the **architect/engineer** as required by Section 14 of the **Illinois Architecture Practice Act of 1989**, Section 12 of the Illinois Structural Engineering Licensing Act and Section 14 of the **Illinois Professional Engineering Practice Act** may be provided in lieu of the "Statement of Compliance" required in Section 101.9.2.*

101.10 Effect on Removal of Barriers in Existing Facilities. *This document does not address barrier removal in existing* ***facilities****.* ***Buildings*** *constructed prior to May 1, 1988 were not subject to the Illinois* ***Accessibility Code****. For guidance on removal of barriers in existing* ***facilities****, see Section 101.2 of the 2010 ADA Standards.*

101.11 Waiver Prohibited. *The requirements of this* ***Code*** *cannot be waived by any party.*

102 Dimensions for Adults and Children

The technical requirements are based on adult dimensions and anthropometrics. In addition, this document includes technical requirements based on children's dimensions and anthropometrics for drinking fountains, water closets, toilet compartments, lavatories and sinks, dining surfaces, and work surfaces.

103 Equivalent Facilitation

Nothing in these requirements prevents the use of designs, products, or technologies as alternatives to those prescribed, provided they result in substantially equivalent or greater accessibility and usability.

104 Conventions

104.1 Dimensions. Dimensions that are not stated as "maximum" or "minimum" are absolute.

104.1.1 Construction and Manufacturing Tolerances. All dimensions are subject to conventional industry tolerances except where the requirement is stated as a range with specific minimum and maximum end points.

104.2 Calculation of Percentages. Where the required number of ***elements*** or ***facilities*** to be provided is determined by calculations of ratios or percentages and remainders or fractions result, the next greater whole number of such ***elements*** or ***facilities*** shall be provided. Where the determination of the required size or dimension of an element or ***facility*** involves ratios or percentages, rounding down for values less than one half shall be permitted.

104.3 Figures. Unless specifically stated otherwise, figures are provided for informational purposes only.

Convention	Description
36 / 915	dimension showing English units (in inches unless otherwise specified) above the line and SI units (in millimeters unless otherwise specified) below the line
6 / 150	dimension for small measurements
33-36 / 840-915	dimension showing a range with minimum - maximum
min	minimum
max	maximum
>	greater than
≥	greater than or equal to
<	less than
≤	less than or equal to
	boundary of clear floor space or maneuvering clearance
℄	centerline
	a permitted element or its extension
	direction of travel or approach
	a wall, floor, ceiling or other element cut in section or plan
	a highlighted element in elevation or plan
	location zone of element, control or feature

Figure 104
Graphic Convention for Figures

104.4 Mandatory Terms. *Use of the terms "provide" or "shall" means the provision is mandatory.*

105 Referenced Standards

105.1 General. *The standards listed in 105.2 are incorporated by reference in this document and are part of the requirements to the prescribed extent of each such reference.*

105.2 Referenced Standards. The specific edition of the standards listed below are referenced in this document. Where differences occur between this document and the referenced standards, this document applies.

105.2.1 ANSI/BHMA. Copies of the referenced standards may be obtained from the Builders Hardware Manufacturers Association, 355 Lexington Avenue, 17th floor, New York, NY 10017 (**www.buildershardware.com**).

ANSI/BHMA A156.10-1999 American National Standard for Power Operated Pedestrian Doors (see 404.3).

ANSI/BHMA A156.19-2002 American National Standard for Power Assist and Low Energy Power Operated Doors (see 404.3, 408.3.2.1, and 409.3.1).

105.2.2 ASME. Copies of the referenced standards may be obtained from the American Society of Mechanical Engineers, Three Park Avenue, New York, New York 10016 (**www.asme.org**).

ASME A17.1- 2013 Safety Code for Elevators and Escalators (see 407.1, 408.1, 409.1, and 810.9).

ASME A18.1-2011 Safety Standard for Platform Lifts and Stairway Chairlifts (see 410.1).

105.2.3 ASTM. Copies of the referenced standards may be obtained from the American Society for Testing and Materials, 100 Bar Harbor Drive, West Conshohocken, Pennsylvania 19428 (**www.astm.org**).

ASTM F 1292-13 Standard Specification for Impact Attenuation of Surfacing Materials within the Use Zone of Playground Equipment (see 1008.2.6.2).

ASTM F 1487-11 Standard Consumer Safety Performance Specification for Playground Equipment for Public Use (see 106.5).

ASTM F 1951-09b Standard Specification for Determination of Accessibility of Surface Systems under and around Playground Equipment (see 1008.2.6.1).

105.2.4 ICC/IBC. Copies of the referenced standard may be obtained from the International Code Council, 4051 Flossmoor Road, Country Club Hills, IL 60478 (**www.iccsafe.org**).

International Building Code, 2015 Edition (see 1005.2.1).

International Building Code, 2006 Edition, or later edition (see Definition of "Applicable Building Code").

105.2.5 NFPA. Copies of the referenced standards may be obtained from the National Fire Protection Association, 1 Batterymarch Park, Quincy, Massachusetts 02169-7471, (**www.nfpa.org**).

NFPA 72 National Fire Alarm Code, 2013 Edition (see 702.1 and 809.5.2).

105.2.6 National Park Service, U.S. Department of the Interior. *Copies of the referenced standards may be obtained from the* ***www.nps.gov/tps/standards/rehabilitation.htm*** *or at your local library. It is also available from the* ***Illinois State Historic Preservation Office****. The Standards and Guidelines do not include any later amendments or editions.*

"Secretary of the Interior's Standards for Rehabilitation and Guidelines for Rehabilitating Historic Buildings" (Revised 1992).

106 Definitions

106.1 General. For the purpose of this document, the terms defined in 106.5 have the indicated meaning.

106.2 Terms Defined in Referenced Standards. *Terms not defined in 106.5 but specifically defined in a referenced standard, shall have the specified meaning from the referenced standard unless otherwise stated.*

106.3 Undefined Terms*. The meaning of terms not specifically defined in 106.5 or in referenced standards shall be as defined by collegiate dictionaries in the sense that the context implies.*

106.4 Interchangeability. Words, terms, and phrases used in the singular include the plural and those used in the plural include the singular.

106.5 Defined Terms.

Accessibility Code. *As required by the* ***Environmental Barriers Act****, accessibility code means this Code.*

Accessible. A **site**, **building**, **facility**, or portion thereof that complies with this ***Code***.

Accessible Route. *A continuous unobstructed path connecting all accessible* ***elements*** *and* ***spaces*** *of a* ***building*** *or* ***facility****. Interior* ***accessible routes*** *may include corridors, floors,* ***ramps****, elevators, lifts, skywalks, tunnels and clear floor space at fixtures. Exterior* ***accessible routes*** *may include parking access aisles,* ***curb ramps****, crosswalks at* ***vehicular ways****,* ***walks****,* ***ramps****, and lifts.*

Adaptability or Adaptable. *The ability of certain* ***building spaces*** *and* ***elements****, such as kitchen counters, sinks, and grab bars, to be added or altered so as to accommodate the needs of individuals with different types or degrees of* ***disability****.*

Adaptable Dwelling Unit. *A* ***dwelling unit*** *constructed and equipped so it can be converted with minimal* ***structural change*** *for use by persons with different types and degrees of* ***disability****.*

Addition. An expansion, extension, or increase in the gross floor area or height of a **building** or **facility**.

Administrative Authority. *A jurisdictional body that adopts or enforces the* ***applicable building code****, or other codes, regulations and/or standards for the design, construction or* ***alteration*** *of* ***buildings*** *and* ***facilities****.*

Alteration. *Any modification or renovation* that affects or could affect the usability of the building or ***facility*** or *part of the* ***building*** *or* ***facility***. Alteration includes, but is not limited to, remodeling, renovation, rehabilitation, reconstruction, ***historic preservation****,* ***historic reconstruction****,* ***historic rehabilitation****,* ***historic restoration***, changes to or rearrangement of the structural parts or ***elements****, changes to or replacement of plumbing fixtures or controls,* changes to or rearrangement in the plan configuration of walls and full-height partitions, *resurfacing of* ***circulation paths*** *or* ***vehicular ways****, and changes or improvements to parking lots (as required in 202.3.3).* The following work is not considered to be an alteration unless it affects the usability of the ***building*** or ***facility***: normal maintenance, reroofing, painting or wallpapering, or changes to mechanical and electrical systems.

Amusement Attraction. Any ***facility***, or portion of a ***facility***, located within an amusement park or theme park which provides amusement without the use of an amusement device. Amusement attractions include, but are not limited to, fun houses, barrels, and other attractions without seats.

Amusement Ride. A system that moves persons through a fixed course within a defined area for the purpose of amusement.

Amusement Ride Seat. A seat that is built-in or mechanically fastened to an amusement ride intended to be occupied by one or more passengers.

Architect/Engineer. *An architect, professional engineer, or structural engineer as defined by the* ***Illinois Architecture Practice Act of 1989****, the* ***Illinois Professional Engineering Practice Act of 1989****, or the Illinois Structural Engineering Licensing Act who has the contract responsibility for the project, who prepares the construction documents from which the* ***building*** *is constructed, and who signs the Statement of Compliance with the* ***Environmental Barriers Act*** *and this* ***Code****.*

Area of Refuge. *An area where persons unable to use stairways can remain temporarily to await instructions or assistance during emergency evacuation.*

Area of Sport Activity. That portion of a room or **space** where the play or practice of a sport occurs.

Assembly Area. A ***building*** or ***facility***, or portion thereof, used for the purpose of entertainment, educational or civic gatherings, or similar purposes. For the purposes of these requirements, assembly areas include, but are not limited to, classrooms, lecture halls, courtrooms, ***public*** meeting rooms, ***public*** hearing rooms, legislative chambers, motion picture houses, auditoria, theaters, playhouses, dinner theaters, concert halls, centers for the performing arts, amphitheaters, arenas, stadiums, grandstands, or convention centers.

Assistive Listening System (ALS). An amplification system utilizing transmitters, receivers, and coupling devices to bypass the acoustical space between a sound source and a listener by means of induction loop, radio frequency, infrared, or direct-wired equipment.

Boarding Pier. A portion of a pier where a boat is temporarily secured for the purpose of embarking or disembarking.

Boards. *Boards include, but are not limited to, wood, plastic, metal, and composite products.*

Boat Launch Ramp. A sloped surface designed for launching and retrieving trailered boats and other water craft to and from a body of water.

Boat Slip. That portion of a pier, main pier, finger pier, or float where a boat is moored for the purpose of berthing, embarking, or disembarking.

Building. Any structure used or intended for supporting or sheltering any use or occupancy.

Building Code, Applicable. *The building code adopted by the* ***administrative authority*** *under whose jurisdiction the work involved will be carried out. The work includes construction,* ***additions****,* ***alterations****, or change of occupancy. If no building code has been adopted by the* ***administrative authority****, or if the work is not within a municipal or other* ***administrative authority's*** *jurisdiction, the building code shall be deemed to be the 2006, or a later edition, of the ICC International Building Code.*

Built Environment. *Those parts of the physical environment which are designed, constructed, or altered by people, including all* ***public facilities*** *and* ***multi-story housing*** *units.*

Camp Shelter. *A partially enclosed structure that provides campers and hikers cover from weather and that does not contain plumbing fixtures or kitchen appliances. Camp shelters are not* ***transient lodging facilities*** *or* ***residential dwelling units****.*

Camping Facility. *A* ***site*** *or portion of a* ***site*** *developed for outdoor recreational purposes that contains* ***camping units****.*

Camping Unit. *An outdoor space in a* ***camping facility*** *used for camping that contains* ***outdoor constructed features****, parking spaces for recreational vehicles or other vehicles, tent pads or tent platforms, or* ***camp shelters****.*

Catch Pool. A pool or designated section of a pool used as a terminus for water slide flumes.

Characters. Letters, numbers, punctuation marks, and typographic symbols.

Children's Use. Describes **spaces** and **elements** specifically designed for use primarily by people 12 years old and younger.

Circulation Path. An exterior or interior way of passage provided for pedestrian travel, including but not limited to, **walks**, hallways, courtyards, elevators, platform lifts, **ramps**, stairways, and landings.

Closed-Circuit Telephone. A telephone with a dedicated line such as a house phone, courtesy phone, or phone that must be used to gain entry to a **facility**.

Code ("this Code", or "the Code"). *The Illinois Accessibility Code.*

Common Use Areas or Common Areas. *Areas, including interior and exterior rooms,* ***spaces****, or* ***elements****, which are held out for use by all tenants and* ***owners*** *in* ***public facilities*** *and* ***multi-story housing****, including but not limited to, residents of an apartment building or condominium complex, occupants of an office building, or the guests of such residents or occupants. Common use areas or common areas includes, but are not limited to, lobbies, elevators, hallways, laundry rooms, swimming pools, storage rooms, recreation areas, parking garages, building offices, conference rooms, patios, restrooms, telephones, drinking fountains, restaurants, cafeterias, delicatessens, and stores.*

Cross Slope. The slope that is perpendicular to the direction of travel (see **running slope**).

Curb Ramp. *A* ***ramp*** *that cuts through or is built up to the curb. Curb ramps can be perpendicular or parallel, or a combination of parallel and perpendicular ramps.*

Detectable Warning. A standardized surface feature built in or applied to walking surfaces or other **elements** to warn of hazards on a **circulation path**.

Disability. *A physical or mental impairment that substantially limits one or more major life activities; or a record or history of such an impairment; or regarded as having such an impairment.*

Dwelling Unit. *A single unit of residence which provides a kitchen or food preparation area, in addition to rooms and* ***spaces*** *for living, bathing, sleeping, and other residential activities. Dwelling units are found in housing types such as townhouses and apartment buildings.*

Element. *An architectural, mechanical (including plumbing), or electrical component of a* ***building****,* ***facility****,* ***space****,* ***site****, or* ***public right-of-way****.*

Elevated Play Component. A **play component** that is approached above or below grade and that is part of a composite play structure consisting of two or more **play components** attached or functionally linked to create an integrated unit providing more than one play activity.

Emergency Warning System. *A fire alarm or smoke or heat detector system used to activate audible and visual emergency alarms.*

Employee Work Area. All or any portion of a ***space*** used only by employees and used only for work. Corridors, toilet rooms, *bathing rooms, locker rooms,* kitchenettes, and break rooms are not employee work areas.

Entrance. Any access point to a **building** or portion of a **building** or **facility** *or* ***multi-story housing*** used for of entering. An entrance includes the approach **walk**, the vertical access leading to the entrance platform, the entrance platform itself, vestibule if provided, the entry door or gate, and the hardware of the entry door or gate.

Environmental Barrier. *An* ***element*** *or* ***space*** *of the* ***built environment*** *which limits accessibility to or use of the* ***built environment*** *by individuals with disabilities.*

Facility. All or any portion of **buildings**, structures, **site** improvements, **elements**, and pedestrian routes or **vehicular ways** located on a **site**.

Gangway. A variable-sloped pedestrian walkway that links a fixed structure or land with a floating structure. Gangways that connect to vessels are not addressed by **the Code**.

Golf Car Passage. A continuous passage upon which a motorized golf car can operate.

Governmental Unit. State *agencies as defined in the* **State Auditing Act**, *circuit courts, units of local government and their officers, boards of election commissioners, public colleges and universities, and school districts.*

Ground Level Play Component. A **play component** that is approached and exited at the ground level.

Historic Preservation. *The act or process of accurately preserving and/or recovering the form and details of a* ***historic building*** *and its setting as it appeared at a particular period of time by means of repair, stabilization, or restoration as defined herein. Historic Preservation also includes "****Historic Reconstruction****," "****Historic Rehabilitation****," and "****Historic Restoration****."*

Historic Reconstruction. *The act or process of reproducing by new construction the exact form and detail of an original* ***building****, structure, object, or part thereof as it appeared at a specific period of time. Historic Reconstruction only applies to* ***reconstruction*** *of* ***buildings*** *which are open to view by the* ***public****, are used to demonstrate historic or architectural values, and/or are used for purposes of display of a* ***historic building*** *type, design, technique of construction, or period setting.*

Historic Rehabilitation. *The act or process of making a compatible use possible for a historic property through repair,* ***alterations****, and* ***additions*** *while preserving those portions or features which convey its historical, cultural, or architectural values.*

Historic Restoration. *The act or process of accurately recovering the form and details of a* ***building*** *or* ***facility*** *and its setting as it appeared at a particular period of time by means of the removal of later work or by replacement of missing earlier work.*

Historically Interpreted Building. *A* ***qualified historic building*** *which is open in whole or part to view by the* ***public*** *and has as its major purpose the display of a historic or architectural artifact created in the past in order to give a sense of cultural orientation and establish values of time and place. Historically interpreted buildings do not necessarily have attendants or formal guided or even self-guided tours.*

Horizontal Exit. *An exit component consisting of fire-resistance-rated construction and opening protectives intended to compartmentalize portions of a* ***building*** *to create refuge areas that provide safety from fire and smoke from the area of fire origin.*

Key Station. Rapid, light rail, and commuter rail stations, as defined under criteria established by the U.S. Department of Transportation in **49 CFR 37.47** and **49 CFR 37.51**, respectively.

Low Energy Power-Operated Door. *Swinging door that opens automatically upon an action by a pedestrian, such as pressing a push plate or waving a hand in front of a sensor. The door closes automatically, operates with decreased forces, and decreased speeds. See also* ***Power-Assisted Door*** *and* ***Power Operated Door****.*

Mail Boxes. Receptacles for the receipt of documents, packages, or other deliverable matter. Mail boxes include, but are not limited to, post office boxes and receptacles provided by commercial mail-receiving agencies, apartment **facilities**, or schools.

Marked Crossing. A crosswalk or other identified path intended for pedestrian use in crossing a **vehicular way**.

Means of Egress. *A continuous and unobstructed way of egress travel from any point in a* ***building*** *or* ***facility*** *that provides an* ***accessible route*** *to an* ***area of refuge****, a* ***horizontal exit****, or a* ***public way****.*

Mezzanine. An intermediate level or levels between the floor and ceiling of any **story**. It has an aggregate floor area of not more than one-third of the area of the room or **space** in which the level or levels are located. Mezzanines have sufficient elevation that **space** for human occupancy can be provided on the floor below.

Multi-Story Housing. *Any* ***building*** *of four or more stories containing ten or more* ***dwelling units*** *constructed to be held out for sale or lease by any person to the* ***public****. Multi-story housing includes, but is not limited to, the following* ***building*** *types: apartment buildings, condominium buildings, convents, housing for the elderly, and monasteries.*

Occupant Load. The number of persons for which the means of egress of a **building** or portion of a **building** is designed.

Operable Part. A component of an **element** that is used to insert or withdraw objects, or to activate, deactivate, or adjust the **element**.

Outdoor Constructed Features. *Picnic tables, fire rings, grills, fireplaces, wood stoves, trash and recycling receptacles, water hydrants, utility and sewage hookups, outdoor rinsing showers, benches, and viewing scopes provided at outdoor recreation* ***facilities****.*

Owner. *The owner of the real property or existing* ***facility*** *or the tenant of the real property or existing* ***facility****.*

Picnic Facility. *A* ***site*** *or portion of a* ***site*** *developed for outdoor recreational purposes that contains* ***picnic units****.*

Picnic Unit. *An outdoor space in a* ***picnic facility*** *used for picnicking that contains* ***outdoor constructed features****.*

Pictogram. A pictorial symbol that represents activities, **facilities**, or concepts.

Play Area. A portion of a ***site*** containing **play components** designed and constructed for children.

Play Component. An **element** intended to generate specific opportunities for play, socialization, or learning. Play components are manufactured or natural; and are stand-alone or part of a composite play structure.

Power-Assisted Door. *Swinging door that opens by reduced pushing or pulling force on the door operating hardware. The door closes automatically after the pushing or pulling force is released and functions with decreased forces. See also* ***Low Energy Power-Operated Door*** *and* ***Power Operated Door****.*

Power Operated Door. *Swinging, sliding, or folding door which opens automatically when approached by a pedestrian or opens automatically upon an action by a pedestrian. The door closes automatically and includes provisions such as presence sensors to prevent entrapment. See also* ***Low Energy Power-Operated Door*** *and* ***Power-Assisted Door****.*

Primary Function Area. *An area of a* ***building*** *or* ***facility*** *containing a major activity for which the* ***building*** *or* ***facility*** *is intended. There can be multiple areas containing a primary function in a single* ***building****. Primary function areas are not limited to* ***public use*** *areas. Mixed use* ***facilities*** *may include numerous primary function areas for each use. Areas containing a primary function do not include: mechanical rooms, boiler rooms, supply storage rooms, employee lounges or locker rooms, janitorial closets,* ***entrances****, corridors, or restrooms. Restrooms are not areas containing a primary function unless the provision of restrooms is a primary purpose of the area, such as in highway rest stops.*

Privately Owned Building. *Any* ***building*** *which is not a* ***public building*** *or* ***facility*** *as defined by the* ***Code****.*

Public. *Any group of people who are users of the* ***building*** *or employees of the* ***building****. The term "public" is not intended to include those people who are employed by the* ***owner*** *of a* ***building*** *for the sole purpose of construction or* ***alteration*** *of a* ***building*** *during the time in which the* ***building*** *is being constructed or altered.*

Public Facility. *A public facility includes all of the following: 1. Any* ***building****, structure, or* ***site*** *improvement which is: owned by or on behalf of a* ***governmental unit****; leased, rented or used, in whole or in part, by a* ***governmental unit****; or financed, in whole or in part, by a grant or a loan made or guaranteed by a* ***governmental unit****. 2. Any* ***building****, structure, or* ***site*** *improvement used or held out for use or intended for use by the* ***public*** *or by employees for one or more of, but not limited to, the following: the purpose of gathering, recreation,* ***transient lodging****, education, employment, institutional care, or the purchase, rental, sale or acquisition of any goods, personal property or services; places of* ***public*** *display or collection; social service establishments; and stations used for specified* ***public*** *transportation. 3. A* ***public right-of-way****.*

Publicly Owned Building. *Any* ***building*** *owned by the State of Illinois or any* ***governmental unit****.*

Public Entrance. An **entrance** that is not a **service entrance** or a **restricted entrance**.

Public Right-of-Way. *Public land or property, usually in interconnected corridors, that is acquired for or dedicated to transportation purposes.*

Public Use. Interior or exterior rooms, **spaces**, or **elements** that are made available to the public. Public use may be provided at a **building** or **facility** that is **privately owned** or **publicly owned**. ***Employee work areas*** *are not considered public use areas.*

Public Way. Any street, alley, or other parcel of land open to the outside air leading to a public street, which has been deeded, dedicated or otherwise permanently appropriated to the **public** for **public use** and, which has a clear width and height of not less than 10 feet (3050 mm).

Qualified Historic Building (Historic Building). *All* ***buildings****, parts of* ***buildings****,* ***facilities****, or* ***sites*** *individually listed in or eligible for listing in the National Register of Historic Places, a "contributing" building or* ***site*** *in a National Register Historic District as determined by the Illinois State Historic Preservation Office (SHPO) or as determined by a "Certified Local Government" designated by the SHPO, a* ***building*** *or* ***site*** *designated or eligible as a historic or architectural landmark by a local Landmarks Commission or local Historic Preservation Commission, and* ***buildings*** *which undergo* ***historic reconstruction****.*

Ramp. A walking surface that has a **running slope** steeper than 1:20.

Reconstruction. *The act or process of reproducing by new construction the exact form and detail of an original* ***building****, structure, object, or part thereof (see* ***Historic Reconstruction****).*

Residential Dwelling Unit. A unit intended to be used as a residence that is primarily long-term in nature. Residential dwelling units do not include ***transient lodging***, inpatient medical care, licensed long-term care, and detention or correctional ***facilities***.

Restricted Entrance. An **entrance** that is made available for **common use** on a controlled basis *and that is not a* ***service entrance****. Such* ***entrances*** *shall include, but are not limited to, "employee-only"* ***entrances****.*

Running Slope. The slope that is parallel to the direction of travel (see **cross slope**).

Secretary of the Interior's Standards for Rehabilitation. *Criteria developed by the National Park Service, of the U.S. Department of the Interior, and used to determine if a* ***historic rehabilitation*** *project qualifies as a certified rehabilitation. The intent of the* Standards *is to assist the long-term preservation of a property's significance through the preservation of historic materials and features. The* Standards *pertain to* ***historic buildings*** *of all materials, construction types, sizes, and occupancy and encompass the exterior and the interior of* ***historic buildings****. The* Standards *also encompass related landscape features and the* ***building's site*** *and environment, as well as attached, adjacent, or related new construction. The* Standards *are*

codified in the Code of Federal Regulations (**36 CFR 67.7**) *as published and updated by the Office of the Federal Register.*

Self-Service Storage. A **building** or **facility** designed and used for the purpose of renting or leasing individual storage **spaces** to customers for the purpose of storing and removing personal property on a self-service basis.

Service Entrance. An **entrance** intended primarily for delivery of goods or services.

Site. A parcel of land bounded by a property line or a designated portion of a **public right-of-way**.

Soft Contained Play Structure. A play structure made up of one or more ***play components*** where the user enters a fully enclosed play environment that utilizes pliable materials, such as plastic, netting, or fabric.

Space. A definable area, such as a room, toilet room, hall, assembly area, **entrance**, storage room, alcove, courtyard, or lobby.

State. *The State of Illinois and any instrumentality or agency of it.*

Story. That portion of a **building** or **facility** designed for human occupancy included between the upper surface of a floor and upper surface of the floor or roof next above. A story containing one or more **mezzanines** has more than one floor level.

Structural Change. *Changes to or rearrangement of the* ***structural elements****, plumbing fixture changes, or changes to or rearrangement of the plan configuration of walls and full height partitions.*

Structural Element. *A load-carrying component of a structural system of a* ***building****, structure, or* ***facility****, such as a foundation, wall, column, strut, slab, beam, girder, truss, or arch; or components of a* ***structural frame****.*

Structural Frame. The columns and the girders, beams, and trusses having direct connections to the columns and all other members that are essential to the stability of the **building** or **facility** as a whole.

Structurally Impracticable. *Those rare circumstances when the unique characteristics of terrain prevent the incorporation of accessibility features in new construction. (see 203.15)*

Tactile. An object that can be perceived using the sense of touch.

Technically Infeasible. With respect to an **alteration** of a **building** or a **facility**, a condition wherein compliance with a requirement of this **Code** has little likelihood of accomplishment because existing structural conditions would require removing or altering a load-bearing member that is an essential part of the **structural frame**; or because other existing physical or **site** constraints prohibit modification or addition of **elements**, **spaces**, or features that are in full and strict compliance with the minimum requirements.

Temporary. *A* ***building*** *or any* ***element*** *of a* ***building*** *which is not permanent and is designed to be used only for a short period of time for some special purpose. Temporary* ***buildings*** *or* ***facilities*** *include, but are not limited to, reviewing stands, temporary classrooms, bleacher areas, stages, platforms and daises, fixed furniture systems, wall systems, and exhibit areas, temporary banking* ***facilities****, and temporary health screening* ***facilities****. Structures and equipment directly associated with the actual processes of construction are not required to be accessible as permitted in 203.2.*

Trail. *A pedestrian route developed primarily for outdoor recreational purposes. A pedestrian route developed primarily to connect* ***elements****,* ***spaces****, or* ***facilities*** *within a* ***site*** *is not a trail.*

Trailhead. *An outdoor space that is designated by an entity responsible for administering or maintaining a* ***trail*** *to serve as an access point to the* ***trail****. The junction of two or more* ***trails*** *or the undeveloped junction of a* ***trail*** *and a road is not a trailhead.*

Teeing Ground. In golf, the starting place for the hole to be played.

Transfer Device. Equipment designed to facilitate the transfer of a person from a wheelchair or other mobility aid to and from an **amusement ride seat**.

Transient Lodging. A **building** or **facility** containing one or more guest room(s) for sleeping that provides accommodations that are primarily short-term in nature. Transient lodging does not include **residential dwelling units** intended to be used as a residence, inpatient medical care **facilities**, licensed long-term care **facilities**, detention or correctional **facilities**, or private **buildings** or **facilities** that contain no more than five rooms for rent or hire and that are actually occupied by the proprietor as the residence of such proprietor.

Transition Plate. A sloping pedestrian walking surface located at the end(s) of a **gangway**.

TTY. An abbreviation for teletypewriter. Machinery that employs interactive text-based communication through the transmission of coded signals across the telephone network. TTYs may include, devices known as TDDs (telecommunication display devices or telecommunication devices for deaf persons) or computers with special modems. TTYs are also called text telephones.

Use Zone. The ground level area beneath and immediately adjacent to a play structure or play equipment that is designated by ASTM F 1487 (incorporated by reference, see "Referenced Standards" in Chapter 1) for unrestricted circulation around the play equipment and where it is predicted that a user would land when falling from or exiting the play equipment.

Vehicular Way. A route provided for vehicular traffic, such as in a street, driveway, or parking ***facility***.

Viewing Area. *An outdoor space developed for viewing landscapes, wildlife, or other points of interest.*

Walk. An exterior prepared surface for pedestrian use, including pedestrian areas such as plazas and courts.

Wheelchair Space. Space for a single wheelchair and its occupant.

Work Area Equipment. Any machine, instrument, engine, motor, pump, conveyor, or other apparatus used to perform work. As used in this document, this term shall apply only to equipment that is permanently installed or built-in in **employee work areas**. Work area equipment does not include passenger elevators and other accessible means of vertical transportation.

CHAPTER 2: SCOPING REQUIREMENTS

201 Application

201.1 Scope. All areas of newly designed and newly constructed **buildings** and **facilities** and altered portions of existing **buildings** and **facilities** shall comply with these requirements.

201.2 Application Based on Building or Facility Use. Where a **site**, **buildings**, **facility**, room, or **space** contains more than one use, each portion shall comply with the applicable requirements for that use.

201.3 Temporary and Permanent Structures. These requirements shall apply to **temporary** and permanent **buildings** and **facilities**.

201.4 Commercial Facilities Located in Private Residences. When a commercial facility is located in a private residence, the portion of the residence used exclusively as a residence is not covered by this **Code**, but that portion used exclusively in the operation of the commercial facility or that portion used both for the commercial facility and for residential purposes is covered by the new construction and **alterations** requirements of this **Code**. The portion of the residence covered by this **Code** extends to those **elements** used to enter the commercial facility, including the front sidewalk, if any, the door or entryway, and hallways; and those portions of the residence, interior or exterior, available to or used by employees or visitors of the commercial facility, including restrooms.

202 Existing Buildings and Facilities

202.1 General. *Existing **buildings** or **facilities** shall comply with 202.*

202.2 Additions. Each **addition** to an existing **buildings** or **facility** shall comply with the requirements for new construction. Each **addition** that affects or could affect the usability of or access to an area containing a **primary function** shall comply with 202.4. ***Additions** to a **building** must provide entry from the existing **building** at all common levels without necessitating leaving and re-entering the **addition** from the outside.*

202.2.1 Toilet and Bathing Facilities. *If there are no toilet rooms, bathing **facilities**, or shower rooms in the **addition** and these **facilities** are provided in the existing **building**, then at least one toilet room, one bathing **facility**, or one shower room for each sex, or one unisex toilet room or bathing facility (when permitted by the Illinois Plumbing Code) shall comply with 603 through 608.*

202.3 Alterations. Where existing **elements** or **spaces** are altered, each altered **element** or **space** shall comply with the applicable requirements of Chapter 2.

EXCEPTIONS:

1. Unless required by 202.4, where **elements** or **spaces** are altered and the **circulation path** to the altered **element** or **space** is not altered, an **accessible route** shall not be required.

2. In **alterations**, where compliance with applicable requirements is **technically infeasible**, the **alteration** shall comply with the requirements to the maximum extent feasible. *In*

alterations where compliance with the applicable requirements is structurally impracticable, the alteration shall comply with the requirements to the extent that it is not structurally impracticable as set forth in 203.15.

3. **Residential dwelling units** not required to be accessible in compliance with a standard issued pursuant to the **Americans With Disabilities Act** or **Section 504 of the Rehabilitation Act of 1973**, as amended, shall not be required to comply with 202.3.

4. Where **elements** or **spaces** are altered in **camping facilities**, **picnic facilities**, **viewing areas**, or **trailheads** and the **circulation path** to the altered **element** or **space** is not altered, the **circulation path** shall not be required to comply with 1016.

5. *Multi-story housing covered by 233.6 shall not be required to comply with 202.3.*

6. ***Alterations*** *to* ***qualified historic buildings*** *and* ***facilities*** *shall comply with 202.5.*

202.3.1 Prohibited Reduction in Access. An **alteration** that decreases or has the effect of decreasing the accessibility of a **building** or **facility** below the requirements for new construction at the time of the **alteration** is prohibited.

202.3.2 Extent of Application. An **alteration** of an existing **element**, **space**, or area of a **building** or **facility** shall not impose a requirement for accessibility greater than required for new construction.

202.3.3 Parking Lots. *All changes, improvements, or maintenance of existing parking lots including sealcoating, resurfacing, remarking, fencing, curbs,* ***walks****, and/or landscaping shall provide accessible parking spaces in accordance with 208. In addition, an* ***accessible route*** *shall be provided within the parking lot to connect the accessible parking spaces to a path of travel that leads to an accessible* ***entrance****. The* ***accessible route*** *shall include the connection from the parking lot onto the path of travel that leads to the accessible* ***entrance****.*

202.4 Alterations Affecting Primary Function Areas. In addition to the requirements of 202.3, an **alteration** that affects or could affect the usability of or access to an area containing a **primary function** shall be made so as to ensure that, to the maximum extent feasible, the path of travel to the altered area, including the ***entrance*** *route to the altered area and the* rest rooms, telephones, and drinking fountains serving the altered area, are readily accessible to and usable by individuals with disabilities, unless the cost of the **alterations** to provide an accessible path of travel to the **primary function area** exceeds 20% of the cost of the overall **alteration**, or such **alterations** are otherwise disproportionate to the overall **alterations** in terms of cost and scope

as determined under criteria established by the U. S. Attorney General or the U.S. Department of Transportation, as applicable. In existing transportation **facilities**, an area of **primary function** shall be as defined under regulations published by the Secretary of the U.S. Department of Transportation or the U.S. Attorney General.

EXCEPTIONS:

1. **Residential dwelling units** *and* ***multi-story housing*** shall not be required to comply with 202.4.

2. **Camping facilities**, **picnic facilities**, **viewing areas**, **trailheads**, **trails**, and beach access routes shall not be required to comply with 202.4.

202.5 Alterations to Qualified Historic Buildings and Facilities. Alterations to a **qualified historic building** or **facility** shall comply with 202.3 and 202.4. *For projects involving* ***alterations*** *to* ***qualified historic buildings*** *only, the* ***Secretary of the Interior's Standards for Rehabilitation*** *and Guidelines for Rehabilitating Historic Buildings (Revised 1992), U.S. Department of the Interior, National Park Service, Preservation Assistance Division, Washington, D.C., shall apply.*

EXCEPTION: *Where compliance with applicable requirements is* ***technically infeasible*** *or where the Illinois State Historic Preservation Office or the Accessibility Specialist at the Capital Development Board determines, pursuant to 202.5.1, that compliance with the requirements for* ***accessible routes***, ***entrances***, *or toilet* ***facilities*** *would threaten or destroy the historic significance of the* ***building*** *or* ***facility***, *the alternative requirements in 202.5.4 shall be permitted to apply.*

Alterations *to a* ***qualified historic building*** *or* ***facility*** *shall also comply with 202.5.2 and 202.5.3.*

202.5.1 Determination of Alterations That Would Threaten or Destroy Historic Significance. *Where* ***alterations*** *are undertaken to a* ***qualified historic building*** *or* ***facility***, *if the entity undertaking the* ***alterations*** *believes that compliance with the requirements for* ***accessible routes*** *(exterior and interior),* ***ramps***, ***entrances***, *or toilets would threaten or destroy the historic significance of the* ***building*** *or* ***facility*** *and that the alternative requirements in 202.5.4 should be used for the* ***element*** *or* ***space*** *being altered, the entity should consult with the Illinois State Historic Preservation Office (SHPO). If the Illinois SHPO agrees that compliance with the requirements for* ***accessible routes*** *(exterior and interior),* ***ramps***, ***entrances***, *or toilets would threaten or destroy the historic significance of the* ***building*** *or* ***facility***, *the alternative*

*requirements in 202.5.4 may be used. The determination that an **alteration** would threaten or destroy the historic significance of the **building** or **facility** shall be based upon the **Secretary of the Interior's Standards for Rehabilitation** and Guidelines for Rehabilitating Historic Buildings. **Alterations** not recommended by the Standards shall be considered to threaten or destroy the historic significance of the **building** or **facility**. In that case, the alternative requirements as defined in 202.5.4 for **alterations** to **qualified historic buildings** may be used.*

202.5.2 Alterations to Historically Interpreted Buildings. *If **historically interpreted buildings** as defined in 106.5, which are owned by either a **governmental unit** or are **privately owned**, undergo **alterations** to a **primary function area** the minimum requirements of 202.5.2.1 through 202.5.2.7 shall be met.*

202.5.2.1 Accessible Route. *An **accessible route** complying with 207.1 and Chapter 4 shall be provided to one principal level with displays open to the **public**.*

EXCEPTION: *Where providing an **accessible route** would threaten or destroy the historic significance of the **building** or **facility**, fully accessible permanent interpretive exhibits which are of equivalent educational and interpretative scope as the non-accessible historic parts of the **building** or **facility** shall be provided as near to the non-accessible part of the **building** or **facility** as possible.*

202.5.2.2 Displays. *New displays and written information shall be located and designed so that they may be seen by seated persons. New exhibits and signage displayed horizontally (such as open books) should be no higher than 44 inches (1120 mm) above the floor surface.*

202.5.2.3 Toilet Facilities. *If toilets are required in the **facility** by the **Illinois Plumbing Code**, at least one accessible toilet room for each sex shall be provided as near the **site** as possible but at least within 200 feet from the main **entrance** of the **building** or **facility**.*

EXCEPTIONS:

1. *Accessible toilet rooms are not required if the cost exceeds 20% of the overall cost of the **alteration**.*

2. *One accessible unisex toilet room may be provided in lieu of accessible toilet rooms for each sex if the accessible **primary function area** is less than 5,000 net square feet.*

202.5.2.4 Drinking Fountains. *If drinking fountains are required in the **facility** by the **Illinois Plumbing Code**, at least one accessible drinking fountain, or bottled drinking water, or a water*

*dispensing faucet (water station), shall be provided as near the **site** as possible but at least within 200 feet (65 m) from the main **entrance** of the **building** or **facility**.*

202.5.2.5 Parking Spaces. *Accessible parking spaces complying with 208 and 502 shall be provided, where parking is provided. The accessible parking spaces should be located as close to the **building** as possible to shorten the travel distance from the spaces to the **entrance**.*

202.5.2.6 Accessible Route from Parking. *An **accessible route** from the accessible parking spaces, if provided, to an accessible **entrance** shall be provided, unless the cost to provide an **accessible route** exceeds 20% of the overall cost of the **alteration**.*

202.5.2.7 Alternative Requirements. *Alternative requirements for **qualified historic buildings** in 202.5.4 may be substituted for the applicable requirements of Chapter 2.*

202.5.3 Alterations to Other Historic Buildings. *If **qualified historic buildings** other than **historically interpreted buildings** covered in 202.5.2, which are owned by either a **governmental unit** or are **privately owned**, undergo **alterations** the minimum requirements of 202.5.3.1 through 202.5.3.3 shall be met.*

202.5.3.1 Altered Elements or Spaces. *The **element** or **space** being altered shall comply with the applicable requirements of Chapter 2.*

202.5.3.2 Alterations to a Primary Function Area. *When **alterations** are made to a **primary function area**, the following accessible features shall be provided in the following order of priority up to a maximum cost of 20% of the total cost of **alterations**:*

1. *An accessible **entrance** and an accessible means of egress intended for use by the general **public**.*

2. *An **accessible route** between an accessible **entrance** and accessible means of egress and the **primary function area** being altered.*

3. *At least one accessible toilet room for each sex if toilets are required in the **facility** by the **Illinois Plumbing Code**.*

   EXCEPTION. *One accessible unisex toilet room may be provided in lieu of accessible toilet rooms for each sex if the accessible **primary function area** is less than 5,000 net square feet.*

4. *Accessible parking spaces complying with 208 and 502, where parking is provided.*

5. *An **accessible route** from a site arrival point or from the accessible parking spaces, if provided, to an accessible **entrance**.*

202.5.3.3 Alternative Requirements. *Alternative requirements in 202.5.4 may be substituted for these requirements where deemed necessary by the Illinois State Historic Preservation Office.*

202.5.4 **Alternative Requirements** ***for Qualified Historic*** **Buildings.** *The alternative requirements in 202.5.4.1 through 202.5.4.15 may be substituted for the applicable requirements of Chapter 2 when a **qualified historic building** undergoes **alterations**.*

202.5.4.1 Changes in Level. *Changes of level may be accommodated by **ramps** having the following maximum slopes:*

1. *A slope between 1:10 and 1:12 is allowed for a maximum rise of 6 inches (1830 mm).*

2. *A slope between 1:8 and 1:10 is allowed for a maximum rise of 3 inches (915 mm).*

3. A slope between 1:6 and 1:8 is allowed for a maximum rise of 2 inches (610 mm).

4. *Where access to any **space** in a **qualified historic building** will be limited to controlled groups with assigned tour guides, changes in level as provided in this subsection 202.5.4.1(1) may be accommodated by means of a detachable ramp.*

202.5.4.2 Exemptions for Controlled Groups with Assigned Tour Guides. *Where access to any **space** in a **qualified historic building** will be limited to controlled groups with assigned tour guides, requirements of the following Sections are waived for that **space**.*

1. 404, Doors, except minimum widths as noted in 202.5.4.5 below, and threshold heights in 404.2.5;

2. 225 and 811, Storage;

*3. 205 and 309, Controls and Operating Mechanisms, where not intended to be operated by the general **public**;*

*4. 705, **Detectable Warnings**; and*

5. 216 and 703, Signage.

202.5.4.3 Exemption for Controlled Groups and Door Attendants. *Where access to any* ***space*** *in a* ***qualified historic building*** *will be limited to controlled groups with assigned tour guides, or where a full-time door attendant or concierge is provided at the door within visual and audible communication range, there are no special requirements for door hardware or operation.*

202.5.4.4 Door Hardware. *The addition of adapter lever handles that retain the existing hardware will be considered to meet the* ***Secretary of the Interior's Standards for Rehabilitation*** *as they do not result in the removal of any historic features from the structure.*

202.5.4.5 Door Width. *Minimum clear door opening width for a single door or the single active leaf of a pair of doors shall meet the requirements of 404.2.3. When the* ***alteration*** *of an existing historic door does not meet the* ***Secretary of the Interior's Standards for Rehabilitation****, a lesser dimension may be considered to be accessible if it provides the highest level of access within the limited dimensions available. Examples of acceptable methods of providing improved access while maintaining the historic door include the following:*

1. Maintain the door opening area free of any obstructions so that the clear opening can be measured with the door in a 180 degree position rather than the 90 degree position.

2. Reverse the swing of the door.

3. Remove or alter the side door stop(s).

4. Replace the existing hinges with offset hinges.

Example: A historically significant door is only 30 inches (9140 mm) wide. Because the door, associated transom and surrounding trim are all significant features of the ***building****, altering the opening and replacing the door does not meet the* ***Secretary of the Interior's Standards for Rehabilitation****. The installation of off-set hinges and the replacement of the door stops creates a clear opening of 29-1/2 inches (8990 mm), but otherwise retains all of the historic features of the* ***building****. In these circumstances, the modified front entry door would be considered to be accessible.*

202.5.4.6 Width of Pairs of Doors. *For pairs of doors where an individual leaf does not provide the minimum clear opening, the following options provide improved access:*

1. Activating the second leaf; or

2. Adding a power operator that activates both leaves.

202.5.4.7 Entrances. *If it is determined that no* ***entrance*** *used by the* ***public*** *can comply with 206.4 without threatening or destroying the historic character of the* ***building*** *or* ***facility****, then access at any* ***entrance*** *not used by the general* ***public****, but open (unlocked) with directional signage at the primary* ***entrance*** *may be used. The accessible* ***entrance*** *shall also have a notification system. Where security is a problem, remote monitoring may be used.*

202.5.4.8 Accessible Routes from Entrances. Accessible routes *from an accessible* ***entrance*** *to all* ***publicly*** *used* ***spaces*** *on at least the level of the accessible* ***entrance*** *shall be provided. Access shall be provided to all levels of a* ***building*** *or* ***facility*** *in compliance with 207.1 and Chapter 4 whenever practical, and where such access would not threaten or destroy the historic character of the* ***building*** *or* ***facility****.*

202.5.4.9 Stairs. *Where the* ***alterations*** *to a historic stair do not meet the* ***Secretary of the Interior's Standards for Rehabilitation*** *(as determined by the Illinois State Historic Preservation Office), the requirements of 504 are waived.*

Example: The addition of a modern complying handrail on the wall side of a historic stair may meet the minimum requirement for a necessary handrail without ***alterations*** *to the historic railing and balustrade, thus meeting the* ***Secretary of the Interior's Standards for Rehabilitation****. In many instances it may also be possible to install a new code compliant handrail on top of the historic railing and balustrade.*

202.5.4.10 Stair Handrail Extensions. *Full extension of stair handrails shall not be required in* ***alterations*** *where such extensions would be hazardous or impossible due to plan configuration.*

202.5.4.11 Elevator Doors. *If safety door edge is provided in existing automatic elevators, then the automatic door protective and reopening devices as required in 407.3.3 may be omitted.*

202.5.4.12 Elevator Dimensions. *Where existing shaft or* ***structural elements*** *prohibit strict compliance with the minimum dimensions of the elevator cars as required in 407.4.1, then the minimum floor area dimensions may be reduced to no less than 48 inches by 48 inches (1220 mm by 1220 mm).*

202.5.4.13 Assembly Seating Dispersion. *In* ***alterations*** *to* ***qualified historic buildings*** *where it is* ***technically infeasible*** *to disperse seating throughout an assembly area, the seating may be*

*located in collected areas. Seating shall adjoin an **accessible route** which also serves as a means of emergency egress.*

202.5.4.14 Elevator Features. *Where historic elevator features such as call buttons, hall lanterns, and control panels cannot comply with 407, the addition of new compliant controls that retain the existing will be considered to meet the **Secretary of the Interior's Standards for Rehabilitation** as they do not result in the removal of the historic elevator features.*

202.5.4.15 Signage. *Where historic signage including exit signs, directional, informational, and permanent room signage, cannot comply with 216 and 703, the addition of new compliant signage that retains the existing will be considered to meet the **Secretary of the Interior's Standards for Rehabilitation** as it does not result in the removal of the historic signage.*

202.5.4.16 Site Arrival Points. *At least one accessible route from a site arrival point to an accessible entrance shall be required.*

202.6 Governmental Units in Public Facilities. *A **governmental unit** shall not enter into a new or renewal agreement to lease, rent, or use, in whole or in part, any **public facility** which does not comply with this **Code**.*

203 General Exceptions

203.1 General. Sites, **buildings**, **facilities**, and **elements** are exempt from these requirements to the extent specified by 203.

203.2 Construction Sites. Structures and sites directly associated with the actual processes of construction, including but not limited to, scaffolding, bridging, materials hoists, materials storage, and construction trailers shall not be required to comply with these requirements or to be on an **accessible route**. Portable toilet units provided for use exclusively by construction personnel on a construction site shall not be required to comply with 213 or to be on an **accessible route**.

203.3 Raised Areas. Areas raised primarily for purposes of security, life safety, or fire safety, including but not limited to, observation or lookout galleries, prison guard towers, fire towers, or life guard stands shall not be required to comply with these requirements or to be on an **accessible route**.

203.4 Limited Access Spaces. Spaces accessed only by ladders, catwalks, crawl spaces, or very narrow passageways shall not be required to comply with these requirements or to be on an **accessible route**.

203.5 Machinery Spaces. Spaces frequented only by service personnel for maintenance, repair, or occasional monitoring of equipment shall not be required to comply with these requirements or to be on an **accessible route**. Machinery spaces include, but are not limited to, elevator pits or elevator penthouses; mechanical, electrical or communications equipment rooms; piping or equipment catwalks; water or sewage treatment pump rooms and stations; electric substations and transformer vaults; and highway and tunnel utility **facilities**.

203.6 Single Occupant Structures. Single occupant structures accessed only by passageways below grade or elevated above standard curb height, including but not limited to, toll booths that are accessed only by underground tunnels, shall not be required to comply with these requirements or to be on an **accessible route**.

203.7 Detention and Correctional Facilities. In detention and correctional **facilities**, **common use areas** that are used only by inmates or detainees and security personnel and that do not serve holding cells or housing cells required to comply with 232, shall not be required to comply with these requirements or to be on an **accessible route**.

203.8 Residential Facilities. In residential ***facilities***, ***common use areas*** that do not serve **residential dwelling units** required to provide mobility features complying with 809.2 through 809.4 shall not be required to comply with these requirements or to be on an **accessible route**. *This exemption does not apply to* ***multi-story housing*** *covered by 233.6.*

203.9 Employee Work Areas. Spaces and **elements** within **employee work areas** shall only be required to comply with 206.2.8, 207.1, and 215.3 and shall be designed and constructed so that individuals with disabilities can approach, enter, and exit the **employee work area**. **Employee work areas**, or portions of **employee work areas**, other than raised courtroom stations, that are less than 300 square feet (28 m^2) and elevated 7 inches (180 mm) or more above the finish floor or ground where the elevation is essential to the function of the **space** shall not be required to comply with these requirements or to be on an **accessible route**.

203.10 Raised Refereeing, Judging, and Scoring Areas. Raised structures used solely for refereeing, judging, or scoring a sport shall not be required to comply with these requirements or to be on an **accessible route**.

203.11 Water Slides. Water slides shall not be required to comply with these requirements or to be on an **accessible route**.

203.12 Animal Containment Areas. *Animal cages, pens, corrals, and similar areas in which animals are contained shall be on an* ***accessible route*** *but shall not otherwise be required to comply with these requirements.* ***Public*** *circulation routes where animals may travel, such as in petting zoos and passageways alongside animal pens in* ***State*** *fairs, are not eligible for this exception.*

203.13 Raised Boxing or Wrestling Rings. Raised boxing or wrestling rings shall not be required to comply with these requirements or to be on an **accessible route**.

203.14 Raised Diving Boards and Diving Platforms. Raised diving boards and diving platforms shall not be required to comply with these requirements or to be on an **accessible route**.

203.15 Structural Impracticability. Full compliance with the requirements for new construction is not required in those rare circumstances when the unique characteristics of terrain prevent the incorporation of all required accessibility features. If full compliance is **structurally impracticable**, compliance shall be required to the extent that it is not **structurally impracticable**. In that case, any portion of the **facility** that can be made accessible shall be made accessible to the extent that it is not **structurally impracticable**. If providing accessibility in conformance to these requirements to people with certain disabilities (e.g., people who use a wheelchair) would be **structurally impracticable**, accessibility shall nonetheless be provided for people with other disabilities (e.g., people who use crutches, or people who have a vision, hearing, or mental impairment) in accordance with these requirements.

204 Protruding Objects

204.1 General. Protruding objects on ***circulation paths*** shall comply with 307.

EXCEPTIONS:

1. Within **areas of sport activity**, protruding objects on **circulation paths** shall not be required to comply with 307.

2. Within **play areas**, protruding objects on **circulation paths** shall not be required to comply with 307 provided that ground level **accessible routes** provide vertical clearance in compliance with 1008.2.

205 Operable Parts

205.1 General. Operable parts on accessible **elements**, **accessible route**, and in accessible rooms and **spaces** shall comply with 309.

EXCEPTIONS:

1. **Operable parts** that are intended for use only by service or maintenance personnel shall not be required to comply with 309.

2. Electrical or communication receptacles serving a dedicated use shall not be required to comply with 309.

3. Where two or more outlets are provided in a kitchen above a length of counter top that is uninterrupted by a sink or appliance, one outlet shall not be required to comply with 309.

4. Floor electrical receptacles shall not be required to comply with 309.

5. HVAC diffusers shall not be required to comply with 309.

6. Except for light switches, where redundant controls are provided for a single **element**, one control in each **space** shall not be required to comply with 309.

7. Cleats and other boat securement devices shall not be required to comply with 309.3.

8. Exercise machines and exercise equipment shall not be required to comply with 309.

206 Accessible Routes

206.1 General. Accessible routes shall be provided in accordance with 206 and shall comply with Chapter 4.

EXCEPTIONS:

1. **Accessible routes** shall not be required where outdoor recreation access routes are provided at **camping facilities** in accordance with 244.5, **picnic facilities** in accordance with 245.4, **viewing areas** in accordance with 246.3, or **trailheads** in accordance with 247.3.2.

2. **Accessible routes** shall not be required where at **camping facilities**, **picnic facilities**, **viewing areas**, or **outdoor constructed features** are provided on **trails**.

3. **Accessible routes** shall not be required where beach access routes are provided in accordance with 248.

206.2 Where Required. Accessible routes shall be provided where required by 206.2.

206.2.1 Site Arrival Points. At least one **accessible route** shall be provided within the **site** from accessible parking spaces and accessible passenger loading zones; public streets and sidewalks; and **public** transportation stops to the accessible **building** or **facility entrance** they serve.

EXCEPTIONS:

1. *[Deleted]*.

2. An ***accessible route*** shall not be required between **site** arrival points and the **building** or **facility entrance** if the only means of access between them is a **vehicular way** not providing pedestrian access. *Access from **site** arrival points is permitted to include **vehicular ways**. Where a **vehicular ways**, or a portion of a **vehicular ways**, is provided for pedestrian travel, such as within a shopping center or shopping mall parking lot, this exception shall not apply.*

206.2.2 Within a Site. At least one **accessible route** shall connect accessible **buildings**, accessible **facilities**, accessible **elements**, and accessible **spaces** that are on the same **site**. *For **areas of sport activity**, an **accessible route** is required to connect to the boundary of each **area of sport activity**. The size of an **area of sport activity** includes only the space needed to play. Where multiple sports fields or courts are provided, an **accessible route** is required to each field or **area of sport activity**.*

EXCEPTION: *An **accessible route** shall not be required between accessible **buildings**, accessible **facilities**, accessible **elements**, and accessible **spaces** where all of the following conditions apply:*

1. *The only means of access between them is a **vehicular way** not providing pedestrian access; and*

*2. Due to circumstances outside the control of the **owner**, either the slope of the finished ground level between accessible **facilities** and **buildings** exceeds 1:12, or physical barriers or legal restrictions prevent the installation of an **accessible route**; and*

*3. Parking that complies with 208 and 502 is provided at each accessible **building**, **facility**, **element**, or **space**.*

206.2.3 Multi-Story Buildings and Facilities. At least one **accessible route** shall connect each **story** and **mezzanine** in multi-**story buildings** and **facilities**.

EXCEPTIONS:

1. *An* **accessible route** *is not required to a basement, second **story** or **mezzanine space** if all of the following conditions in 1.1 and 1.2 are met; provided, however, that this exception shall not apply to levels containing offices of health care providers, terminals, depots or other stations used for specified **public** transportation, airport passenger terminals, shopping centers, or shopping malls, **buildings** designed, constructed or altered by or for the use of a public entity, or **buildings** owned by the State of Illinois or any **governmental unit**.*

*1.1 The basement, second **story** and **mezzanine space** are each 1,000 square feet (93 m^2) or less in area; and*

*1.2 The exempt area consists of the following type of **space**: (1) the second **story** of a two-**story building** with or without a basement; or (2) the **mezzanine** of a one-**story building** with or without a basement; or (3) the basement of a one-**story** or a two-**story building**.*

2. *[Deleted].*

3. In detention and correctional **facilities**, an **accessible route** shall not be required to connect stories where cells with mobility features required to comply with 807.2, all **common use areas** serving cells with mobility features required to comply with 807.2, and all **public use** areas are on an **accessible route**.

4. In residential **facilities**, an **accessible route** shall not be required to connect stories where **residential dwelling units** with mobility features required to comply with 809.2 through 809.4, all **common use areas** serving **residential dwelling units** with mobility features required to comply with 809.2 through 809.4, and **public use** areas serving **residential**

dwelling units are on an **accessible route**. *This exemption does not apply to* ***multi-story housing*** *covered by 233.6.*

5. Within multi-***story transient lodging*** guest rooms with mobility features required to comply with 806.2, an **accessible route** shall not be required to connect stories provided that **spaces** complying with 806.2 *and all* ***common areas*** *such as kitchens and living rooms are located* on an **accessible route** and sleeping accommodations for two persons minimum are provided on a **story** served by an **accessible route**. *An* ***accessible route*** *must connect the accessible* ***entrance*** *of the guest room to the* ***common areas*** *and all accessible sleeping accommodations.*

6. In air traffic control towers, an **accessible route** shall not be required to serve the cab and the floor immediately below the cab.

7. *[Deleted – see 202.5]*.

8. ***Spaces*** *greater than 1,000 square feet (93 m^2) but less than 3,000 square feet (280 m^2) in area that are used exclusively for archival storage or for product storage in a business or mercantile occupancy shall not be required to be on an* ***accessible route****.*

206.2.3.1 Stairs and Escalators in Existing Buildings. In **alterations** and **additions**, where an escalator or stair is provided where none existed previously and major structural modifications are necessary for the installation, an **accessible route** shall be provided between the levels served by the escalator or stair unless exempted by 206.2.3 *Exceptions 1 through 8*.

206.2.4 Spaces and Elements. At least one **accessible route** shall connect accessible **building** or **facility entrances** with all accessible **spaces** and **elements** *and with all accessible* ***dwelling units*** within the **building** or **facility** which are otherwise connected by a **circulation path** unless exempted by 206.2.3 *Exceptions 1 through 8. An* ***accessible route*** *shall also connect at least one accessible* ***entrance*** *of each accessible* ***dwelling unit*** *with those exterior and interior* ***spaces*** *and* ***facilities*** *that serve the accessible* ***dwelling unit****.*

EXCEPTIONS:

1. Raised courtroom stations, including judges' benches, clerks' stations, bailiffs' stations, deputy clerks' stations, and court reporters' stations shall not be required to provide vertical access provided that the required clear floor space, maneuvering space, and, if appropriate, electrical service are installed at the time of initial construction to allow

future installation of a means of vertical access complying with 405, 407, 408, or 410 without requiring substantial reconstruction of the **space**.

2. In assembly areas with fixed seating required to comply with 221, an **accessible route** shall not be required to serve fixed seating where **wheelchair spaces** required to be on an **accessible route** are not provided.

3. ***Accessible routes*** *shall not be required to connect stories or* ***mezzanines*** *where multi-****story buildings*** *or* ***facilities*** *are exempted by 206.2.3 Exceptions 1 through 8.*

206.2.5 Restaurants, Cafeterias, and Banquet Rooms. In restaurants and cafeterias, an ***accessible route*** shall be provided to all dining areas, including raised or sunken dining areas, and outdoor dining areas. *In banquet rooms or* ***spaces*** *where a head table or speaker's lectern is located on a raised platform, an* ***accessible route*** *shall be provided to the platform. Open edges of a raised platform shall be protected by placement of tables or by a curb.*

EXCEPTIONS:

1. In **buildings** or **facilities** not required to provide an **accessible route** between stories, an **accessible route** shall not be required to a **mezzanine** dining area where the **mezzanine** contains less than 25 percent of the total combined area for seating and dining and where the same decor and services are provided in the accessible area.

2. In **alterations**, an **accessible route** shall not be required to existing raised or sunken dining areas, or to all parts of existing outdoor dining areas where the same services and decor are provided in an accessible **space** usable by the **public** and not restricted to use by people with disabilities.

3. In sports **facilities**, tiered dining areas providing seating required to comply with 221 shall be required to have **accessible routes** serving at least 25 percent of the dining area provided that **accessible routes** serve seating complying with 221 and each tier is provided with the same services.

206.2.6 Performance Areas. Where a **circulation path** directly connects a performance area to an assembly seating area, an **accessible route** shall directly connect the assembly seating area with the performance area. An **accessible route** shall be provided from performance areas to ancillary areas or **facilities** used by performers unless exempted by 206.2.3 *Exceptions 1 through 8.*

206.2.7 Press Boxes. Press boxes in assembly areas shall be on an **accessible route**.

EXCEPTIONS:

1. An **accessible route** shall not be required to press boxes in bleachers that have points of entry at only one level provided that the aggregate area of all press boxes is 500 square feet (46 m^2) maximum.

2. An **accessible route** shall not be required to free-standing press boxes that are elevated above grade 12 feet (3660 mm) minimum provided that the aggregate area of all press boxes is 500 square feet (46 m^2) maximum.

206.2.8 Employee Work Areas. Common use circulation paths within **employee work areas** shall comply with 402.

EXCEPTIONS:

1. **Common use circulation paths** located within **employee work areas** that are less than 1000 square feet (93 m^2) and defined by permanently installed partitions, counters, casework, or furnishings shall not be required to comply with 402.

2. **Common use circulation paths** located within **employee work areas** that are an integral component of ***work area equipment*** shall not be required to comply with 402.

3. **Common use circulation paths** located within exterior **employee work areas** that are fully exposed to the weather shall not be required to comply with 402.

206.2.9 Amusement Rides. Amusement rides required to comply with 234 shall provide **accessible routes** in accordance with 206.2.9. **Accessible routes** serving **amusement rides** shall comply with Chapter 4 except as modified by 1002.2.

206.2.9.1 Load and Unload Areas. Load and unload areas shall be on an **accessible route**. Where load and unload areas have more than one loading or unloading position, at least one loading and unloading position shall be on an **accessible route**.

206.2.9.2 Wheelchair Spaces, Ride Seats Designed for Transfer, and Transfer Devices. When **amusement rides** are in the load and unload position, **wheelchair spaces** complying with 1002.4, **amusement ride seats** designed for transfer complying with 1002.5, and **transfer devices** complying with 1002.6 shall be on an **accessible route**.

206.2.10 Recreational Boating Facilities. Boat slips required to comply with 235.2 and **boarding piers** at **boat launch ramps** required to comply with 235.3 shall be on an **accessible route**. **Accessible routes** serving recreational boating **facilities** shall comply with Chapter 4, except as modified by 1003.2.

206.2.11 Bowling Lanes. Where bowling lanes are provided, at least 5 percent, but no fewer than one of each type of bowling lane, shall be on an **accessible route**.

206.2.12 Court Sports. In court sports, at least one **accessible route** shall directly connect both sides of the court.

206.2.13 Exercise Machines and Equipment. Exercise machines and equipment required to comply with 236 shall be on an **accessible route**.

206.2.14 Fishing Piers and Platforms. Fishing piers and platforms shall be on an **accessible route**. **Accessible routes** serving fishing piers and platforms shall comply with Chapter 4 except as modified by 1005.1.

206.2.15 Golf Facilities. At least one **accessible route** shall connect accessible **elements** and **spaces** within the boundary of the golf course. In addition, **accessible routes** serving golf car rental areas; bag drop areas; course weather shelters complying with 238.2.3; course toilet rooms; and practice putting greens, practice **teeing grounds**, and teeing stations at driving ranges complying with 238.3 shall comply with Chapter 4 except as modified by 1006.2.

EXCEPTION: Golf car passages complying with 1006.3 shall be permitted to be used for all or part of **accessible routes** required by 206.2.15.

206.2.16 Miniature Golf Facilities. Holes required to comply with 239.2, including the start of play, shall be on an **accessible route**. **Accessible routes** serving miniature golf **facilities** shall comply with Chapter 4 except as modified by 1007.2.

206.2.17 Play Areas. Play areas shall provide **accessible routes** in accordance with 206.2.17. **Accessible routes** serving **play areas** shall comply with Chapter 4 except as modified by 1008.2.

206.2.17.1 Ground Level and Elevated Play Components. At least one **accessible route** shall be provided within the **play area**. The **accessible route** shall connect **ground level play components** required to comply with 240.2.1 and **elevated play components** required to comply with 240.2.2, including entry and exit points of the **play components**.

206.2.17.2 Soft Contained Play Structures. Where three or fewer entry points are provided for **soft contained play structures**, at least one entry point shall be on an **accessible route**. Where four or more entry points are provided for **soft contained play structures**, at least two entry points shall be on an **accessible route**.

206.3 Location. Accessible routes shall coincide with or be located in the same area as general **circulation paths**. Where **circulation paths** are interior, required **accessible routes** shall also be interior.

206.4 Entrances. Entrances shall be provided in accordance with 206.4. **Entrance** doors, doorways, and gates shall comply with 404 and shall be on an **accessible route** complying with 402.

EXCEPTIONS:

1. Where an **alteration** includes **alterations** to an **entrance**, and the **building** or **facility** has another **entrance** complying with 404 that is on an **accessible route**, the altered **entrance** shall not be required to comply with 206.4 unless required by 202.4.

2. *[Deleted]*.

206.4.1 Public Entrances. In addition to **entrances** required by 206.4.2 through 206.4.9, at least 60 percent of all **public entrances** shall comply with 404.

EXCEPTION: In multi-story housing covered by 233.6, at least 50 percent of all public entrances shall comply with 404.

206.4.2 Parking Structure Entrances. Where direct access is provided for pedestrians from a parking structure to a **building** or **facility entrance**, each direct access to the **building** or **facility entrance** shall comply with 404.

206.4.3 Entrances from Tunnels or Elevated Walkways. Where direct access is provided for pedestrians from a pedestrian tunnel or elevated walkway to a **building** or **facility**, at least one direct **entrance** to the **building** or **facility** from each tunnel or walkway shall comply with 404.

206.4.4 Transportation Facilities. In addition to the requirements of 206.4.2, 206.4.3, and 206.4.5 through 206.4.9, transportation **facilities** shall provide **entrances** in accordance with 206.4.4.

206.4.4.1 Location. In transportation **facilities**, where different **entrances** serve different transportation fixed routes or groups of fixed routes, at least one **public entrance** serving each fixed route or group of fixed routes shall comply with 404.

EXCEPTION: Entrances to **key stations** and existing intercity rail stations retrofitted in accordance with **49 CFR 37.49** or **49 CFR 37.51** shall not be required to comply with 206.4.4.1.

206.4.4.2 Direct Connections. Direct connections to other **facilities** shall provide an **accessible route** complying with 404 from the point of connection to boarding platforms and all transportation system **elements** required to be accessible. Any **elements** provided to facilitate future direct connections shall be on an **accessible route** connecting boarding platforms and all transportation system **elements** required to be accessible.

EXCEPTION: In **key stations** and existing intercity rail stations, existing direct connections shall not be required to comply with 404.

206.4.4.3 Key Stations and Intercity Rail Stations. Key stations and existing intercity rail stations required by Subpart C of **49 CFR 37** to be altered shall have at least one **entrance** complying with 404.

206.4.5 Tenant Spaces. At least one accessible **entrance** to each tenancy in a **facility** shall comply with 404.

EXCEPTION: Self-service storage facilities not required to comply with 225.3 shall not be required to be on an **accessible route**.

206.4.6 Residential Dwelling Unit Primary Entrance. In **residential dwelling units**, at least one primary **entrance** shall comply with 404. The primary **entrance** to a **residential dwelling unit** shall not be to a bedroom.

206.4.7 Restricted Entrances. Where **restricted entrances** are provided to a **building** or **facility**, at least one **restricted entrance** to the **building** or **facility** shall comply with 404.

206.4.8 Service Entrances. If a **service entrance** is the only **entrance** to a **building** or to a tenancy in a **facility**, that **entrance** shall comply with 404.

206.4.9 Entrances for Inmates or Detainees. Where **entrances** used only by inmates or detainees and security personnel are provided at judicial **facilities**, detention **facilities**, or correctional **facilities**, at least one such **entrance** shall comply with 404.

206.5 Doors, Doorways, and Gates. Doors, doorways, and gates providing user passage shall be provided in accordance with 206.5.

206.5.1 Entrances. Each **entrance** to a **building** or **facility** required to comply with 206.4 shall have at least one door, doorway, or gate complying with 404.

206.5.2 Rooms and Spaces. Within a **building** or **facility**, *all doors, doorways, and gates on an* ***accessible route*** *which serve accessible rooms or* ***spaces*** *shall comply with 404*.

206.5.3 Transient Lodging Facilities. In **transient lodging facilities**, **entrances**, doors, and doorways providing user passage into and within guest rooms that are not required to provide mobility features complying with 806.2 shall comply with 404.2.3 *and the door handles and pulls shall comply with 404.2.7*.

EXCEPTION: Shower and sauna doors in guest rooms that are not required to provide mobility features complying with 806.2 shall not be required to comply with 404.2.3.

206.5.4 Residential Dwelling Units. In **residential dwelling units** required to provide mobility features complying with 809.2 through 809.4, all doors and doorways providing user passage shall comply with 404.

206.6 Elevators. Elevators provided for passengers shall comply with 407. Where multiple elevators are provided, each elevator shall comply with 407.

EXCEPTIONS:

1. In a **building** or **facility** permitted to use the exceptions to 206.2.3 or permitted by 206.7 to use a platform lift, elevators complying with 408 shall be permitted.

2. Elevators complying with 408 or 409 shall be permitted in multi-**story residential dwelling units**.

3. Elevators complying with 408 shall be permitted to provide access to the second ***story*** *or the* ***mezzanine*** *of a two-****story building****, or to the basement or* ***mezzanine space*** *of a one-****story building****, where each* ***story*** *is more than 1000 square feet (93 m^2) and less than*

3000 square feet (279 m^2), and is not a shopping center, shopping mall or the professional office of a health care provider.

206.6.1 Existing Elevators. Where **elements** of existing elevators are altered, the same **element** shall also be altered in all elevators that are programmed to respond to the same hall call control as the altered elevator and shall comply with the requirements of 407 for the altered **element**.

206.7 Platform Lifts. Platform lifts shall comply with 410. Platform lifts shall be permitted as a component of an **accessible route** in new construction in accordance with 206.7. Platform lifts shall be permitted as a component of an **accessible route** in an existing **building** or **facility**.

206.7.1 Performance Areas and Speakers' Platforms. *Platform lifts shall be permitted to provide **accessible routes** to performance areas, head tables in banquet rooms and **spaces**, and speakers' platforms.*

206.7.2 Wheelchair Spaces. Platform lifts shall be permitted to provide an **accessible route** to comply with the **wheelchair space** dispersion and line-of-sight requirements of 221 and 802.

206.7.3 Incidental Spaces. Platform lifts shall be permitted to provide an **accessible route** to incidental **spaces** which are not **public use spaces** and which are occupied by five persons maximum.

206.7.4 Judicial Spaces. Platform lifts shall be permitted to provide an **accessible route** to: jury boxes and witness stands; raised courtroom stations including, judges' benches, clerks' stations, bailiffs' stations, deputy clerks' stations, and court reporters' stations; and to depressed areas such as the well of a court.

206.7.5 Existing Site Constraints. Platform lifts shall be permitted where existing exterior **site** constraints make use of a **ramp** or elevator infeasible.

206.7.6 Guest Rooms and Residential Dwelling Units. Platform lifts shall be permitted to connect levels within **transient lodging** guest rooms required to provide mobility features complying with 806.2 or **residential dwelling units** required to provide mobility features complying with 809.2 through 809.4.

206.7.7 Amusement Rides. Platform lifts shall be permitted to provide **accessible routes** to load and unload areas serving **amusement rides**.

206.7.8 Play Areas. Platform lifts shall be permitted to provide **accessible routes** to **play components** or **soft contained play structures**.

206.7.9 Team or Player Seating. Platform lifts shall be permitted to provide **accessible routes** to team or player seating areas serving **areas of sport activity**.

206.7.10 Recreational Boating Facilities and Fishing Piers and Platforms. Platform lifts shall be permitted to be used instead of **gangways** that are part of **accessible routes** serving recreational boating **facilities** and fishing piers and platforms.

206.8 Security Barriers. Security barriers, including but not limited to, security bollards and security check points, shall not obstruct a required **accessible route** or accessible means of egress.

EXCEPTION: Where security barriers incorporate **elements** that cannot comply with these requirements such as certain metal detectors, fluoroscopes, or other similar devices, the **accessible route** shall be permitted to be located adjacent to security screening devices. The **accessible route** shall permit persons with disabilities passing around security barriers to maintain visual contact with their personal items to the same extent provided others passing through the security barrier.

207 Accessible Means of Egress

207.1 General. *Means of egress shall comply with 207 and 506.*

EXCEPTIONS:

1. Where means of egress are permitted by *the* ***applicable building code*** to share a common path of egress travel, accessible means of egress shall be permitted to share a common path of egress travel.

2. **Areas of refuge** shall not be required in detention and correctional **facilities**.

207.2 Platform Lifts. Standby power shall be provided for *platform lifts permitted by 506.5* to serve as a part of an accessible means of egress.

208 Parking Spaces

208.1 General. Where parking spaces are provided *for the **public**, for visitors or for employees*, parking spaces shall be provided in accordance with 208.

EXCEPTION: Parking spaces used exclusively for buses, trucks, other delivery vehicles, law enforcement vehicles, or vehicular impound shall not be required to comply with 208 provided that lots accessed by the **public** are provided with a passenger loading zone complying with 503.

208.2 Minimum Number. Parking spaces complying with 502 shall be provided in accordance with Table 208.2 except as required by 208.2.1, 208.2.2, and 208.2.3. Where more than one parking **facility** is provided on a **site**, the number of accessible spaces provided on the **site** shall be calculated according to the number of spaces required for each parking **facility**.

Table 208.2 Parking Spaces

Total Number of Parking Spaces Provided in Parking Facility	Minimum Number of Required Accessible Parking Spaces
1 to 25	1
26 to 50	2
51 to 75	3
76 to 100	4
101 to 150	5
151 to 200	6
201 to 300	7
301 to 400	8
401 to 500	9
501 to 1000	2 percent of total
1001 and over	20, plus 1 for each 100, or fraction thereof, over 1000

208.2.1 Hospital Outpatient Facilities. Ten percent of patient and visitor parking spaces provided to serve hospital outpatient **facilities** shall comply with 502.

208.2.2 Rehabilitation Facilities and Outpatient Physical Therapy Facilities. Twenty percent of patient and visitor parking spaces provided to serve rehabilitation **facilities** specializing in treating conditions that affect mobility and outpatient physical therapy **facilities** shall comply with 502.

208.2.3 Residential Facilities *Owned or Financed by Governmental Entities*. Parking spaces provided to serve residential **facilities** *owned or financed by governmental entities* shall comply with 208.2.3.

208.2.3.1 Parking for Residents. Where at least one parking space is provided for each **residential dwelling unit**, at least one parking space complying with 502 shall be provided for each **residential dwelling unit** required to provide mobility features complying with 809.2 through 809.4.

208.2.3.2 Additional Parking Spaces for Residents. Where the total number of parking spaces provided for each **residential dwelling unit** exceeds one parking space per **residential dwelling unit**, 2 percent, but no fewer than one space, of all the parking spaces not covered by 208.2.3.1 shall comply with 502.

208.2.3.3 Parking for Guests, Employees, and Other Non-Residents. Where parking spaces are provided for persons other than residents, parking shall be provided in accordance with Table 208.2.

208.2.4 Vertical Clearance at Parking Spaces. For every six or fraction of six parking spaces required by 208.2 to comply with 502, *at least one shall have a vertical clearance complying with 502.5.*

208.3 Location. Parking **facilities** shall comply with 208.3.

208.3.1 General. Parking spaces complying with 502 that serve a particular **building** or **facility** shall be located on the shortest **accessible route** from parking to an **entrance** complying with 206.4. Where parking serves more than one accessible **entrance**, parking spaces complying with 502 shall be dispersed and located on the shortest **accessible route** to the accessible **entrances**. In parking **facilities** that do not serve a particular **building** or **facility**, parking spaces complying with 502 shall be located on the shortest **accessible route** to an accessible pedestrian **entrance** of the parking **facility**.

EXCEPTIONS:

1. *All parking spaces required by 208.2.4* shall be permitted to be grouped on one level within a multi-**story** parking **facility**.

2. Parking spaces shall be permitted to be located in different parking **facilities** if substantially equivalent or greater accessibility is provided in terms of distance from an accessible **entrance** or **entrances**, parking fee, and user convenience.

208.3.2 Residential Facilities. In residential **facilities** containing **residential dwelling units** required to provide mobility features complying with 809.2 through 809.4, parking spaces provided in accordance with 208.2.3.1 shall be located on the shortest **accessible route** to the **residential dwelling unit entrance** they serve. Spaces provided in accordance with 208.2.3.2 shall be dispersed throughout all types of parking provided for the **residential dwelling units**.

EXCEPTION: Parking spaces provided in accordance with 208.2.3.2 shall not be required to be dispersed throughout all types of parking if substantially equivalent or greater accessibility is provided in terms of distance from an accessible **entrance**, parking fee, and user convenience.

209 Passenger Loading Zones and Bus Stops

209.1 General. Passenger loading zones shall be provided in accordance with 209.

209.2 Type. Where provided, passenger loading zones shall comply with 209.2.

209.2.1 Passenger Loading Zones. Passenger loading zones, except those required to comply with 209.2.2 and 209.2.3, shall provide at least one passenger loading zone complying with 503 in every continuous 100 linear feet (30 m) of loading zone space, or fraction thereof.

209.2.2 Bus Loading Zones. In bus loading zones restricted to use by designated or specified **public** transportation vehicles, each bus bay, bus stop, or other area designated for lift or ramp deployment shall comply with 810.2.

209.2.3 On-Street Bus Stops. On-street bus stops shall comply with 810.2 to the maximum extent practicable.

209.3 Medical Care and Long-Term Care Facilities. At least one passenger loading zone complying with 503 shall be provided at an accessible **entrance** to licensed medical care and licensed long-term care **facilities** where the period of stay exceeds twenty-four hours.

209.4 Valet Parking. Parking **facilities** that provide valet parking services shall provide at least one passenger loading zone complying with 503.

209.5 Mechanical Access Parking Garages. Mechanical access parking garages shall provide at least one passenger loading zone complying with 503 at vehicle drop-off and vehicle pick-up areas.

210 Stairways

210.1 General. Interior and exterior stairs that are part of a means of egress shall comply with 504.

EXCEPTIONS:

1. In detention and correctional **facilities**, stairs that are not located in **public use** areas shall not be required to comply with 504.

2. In **alterations**, stairs between levels that are connected by an **accessible route** shall not be required to comply with 504, except that handrails complying with 505 shall be provided when the stairs are altered.

3. In assembly areas, aisle stairs shall not be required to comply with 504.

4. Stairs that connect **play components** shall not be required to comply with 504.

211 Drinking Fountains

211.1 General. Where drinking fountains are provided on an exterior **site**, on a floor, or within a secured area they shall be provided in accordance with 211.

EXCEPTION: In detention or correctional **facilities**, drinking fountains only serving holding or housing cells not required to comply with 232 shall not be required to comply with 211.

211.2 Minimum Number. No fewer than two drinking fountains shall be provided. One drinking fountain shall comply with 602.1 through 602.6 and one drinking fountain shall comply with 602.7.

EXCEPTION: Where a single drinking fountain complies with 602.1 through 602.6 and 602.7, it shall be permitted to be substituted for two separate drinking fountains.

211.3 More Than Minimum Number. Where more than the minimum number of drinking fountains specified in 211.2 are provided, 50 percent of the total number of drinking fountains provided shall comply with 602.1 through 602.6, and 50 percent of the total number of drinking fountains provided shall comply with 602.7.

EXCEPTION: Where 50 percent of the drinking fountains yields a fraction, 50 percent shall be permitted to be rounded up or down provided that the total number of drinking fountains complying with 211 equals 100 percent of drinking fountains.

211.4 Bottle Fillers. *Where a bottle filler is provided, the bottle filler shall be on an* ***accessible route*** *and shall comply with 308 and 309.*

212 Kitchens, Kitchenettes, and Sinks

212.1 General. Where provided, kitchens, kitchenettes, and sinks shall comply with 212.

212.2 Kitchens and Kitchenettes. Kitchens and kitchenettes shall comply with 804.

212.3 Sinks. Where sinks are provided, at least 5 percent, but no fewer than one, of each type provided in each accessible room or **space** shall comply with 606.

EXCEPTIONS:

1. Mop or service sinks shall not be required to comply with 212.3.

2. In **camping facilities** and **picnic facilities**, sinks shall not be required to comply with 212.3 where a cooktop or conventional range is not provided.

213 Toilet Facilities and Bathing Facilities

213.1 General. Where toilet **facilities** and bathing **facilities** are provided, they shall comply with 213. Where toilet **facilities** and bathing **facilities** are provided in **facilities** permitted by Exception 1 not to connect stories by an **accessible route**, toilet **facilities** and bathing **facilities** shall be provided on a **story** connected by an **accessible route** to an accessible **entrance**.

EXCEPTION: Pit toilets provided on **trails** and in **camping facilities** shall not be required to comply with 213.

213.2 Toilet Rooms and Bathing Rooms. Where toilet rooms are provided, each toilet room shall comply with 603. Where bathing rooms are provided, each bathing room shall comply with 603.

EXCEPTIONS:

1. In **alterations** where it is **technically infeasible** to comply with 603, altering existing toilet or bathing rooms shall not be required where a single unisex toilet room or bathing room complying with 213.2.1 is provided and located in the same area and on the same floor as existing inaccessible toilet or bathing rooms.

2. *[Deleted]*.

3. Where multiple single user portable toilet or bathing units are clustered at a single location, no more than 5 percent of the toilet units and bathing units at each cluster shall be required to comply with 603. Portable toilet units and bathing units complying with 603 shall be identified by the International Symbol of Accessibility complying with 703.7.2.1.

4. Where multiple *single user toilet rooms* are clustered at a single location, no more than 50 percent of the single user toilet rooms for each use at each cluster shall be required to comply with 603.

213.2.1 Unisex (Single-Use or Family) Toilet and Unisex Bathing Rooms. Unisex toilet rooms shall contain no more than one lavatory, and two water closets without urinals or one water closet and one urinal. Unisex bathing rooms shall contain one shower or one shower and one bathtub, one lavatory, and one water closet. Doors to unisex toilet rooms and unisex bathing rooms shall have privacy latches.

213.3 Plumbing Fixtures and Accessories. Plumbing fixtures and accessories provided in a toilet room or bathing room required to comply with 213.2 shall comply with 213.3.

213.3.1 Toilet Compartments. Where toilet compartments are provided, at least one toilet compartment shall comply with 604.8.1. In addition to the compartment required to comply with 604.8.1, at least one compartment shall comply with 604.8.2 where six or more toilet compartments are provided, or where the combination of urinals and water closets totals six or more fixtures.

213.3.2 Water Closets. Where water closets are provided, at least one shall comply with 604.

213.3.3 Urinals. Where more than one urinal is provided, at least one shall comply with 605.

213.3.4 Lavatories. Where lavatories are provided, at least one shall comply with 606 and shall not be located in a toilet compartment.

213.3.5 Mirrors. Where mirrors are provided, at least one shall comply with 603.3.

213.3.6 Bathing Facilities. Where bathtubs or showers are provided, at least one bathtub complying with 607 or at least one shower complying with 608 shall be provided.

213.3.7 Coat Hooks and Shelves. Where coat hooks or shelves are provided in toilet rooms without toilet compartments, at least one of each type shall comply with 603.4. Where coat hooks or shelves are provided in toilet compartments, at least one of each type complying with 604.8.3 shall be provided in toilet compartments required to comply with 213.3.1. Where coat hooks or shelves are provided in bathing **facilities**, at least one of each type complying with 603.4 shall serve fixtures required to comply with 213.3.6.

214 Washing Machines and Clothes Dryers

214.1 General. Where provided, washing machines and clothes dryers shall comply with 214.

214.2 Washing Machines. Where three or fewer washing machines are provided, at least one shall comply with 611. Where more than three washing machines are provided, at least two shall comply with 611.

214.3 Clothes Dryers. Where three or fewer clothes dryers are provided, at least one shall comply with 611. Where more than three clothes dryers are provided, at least two shall comply with 611.

215 Fire Alarm Systems

215.1 General. Where fire alarm systems provide audible alarm coverage, alarms shall comply with 215.

EXCEPTION: In existing **facilities**, visible alarms shall not be required except where an existing fire alarm system is upgraded or replaced, or a new fire alarm system is installed.

215.2 Public and Common Use Areas. Alarms in **public use** areas and **common use areas** shall comply with 702.

215.3 Employee Work Areas. Where **employee work areas** have audible alarm coverage, *visible alarms complying with 702 shall be provided.*

215.4 Transient Lodging. Transient lodging guest rooms required to comply with 224.4 shall provide alarms complying with 702.

215.5 Residential Facilities. Where provided in **residential dwelling units** required to comply with 809.5, alarms shall comply with 702.

216 Signs

216.1 General. Signs shall be provided in accordance with 216 and shall comply with 703.

EXCEPTIONS:

1. **Building** directories, menus, seat and row designations in assembly areas, occupant names, **building** addresses, and company names and logos shall not be required to comply with 216.

2. In parking **facilities**, signs shall not be required to comply with 216.2, 216.3, and 216.6 through 216.12.

3. **Temporary**, 7 days or less, signs shall not be required to comply with 216.

4. In detention and correctional **facilities**, signs not located in **public use** areas or employee-only areas shall not be required to comply with 216.

216.2 Designations. Interior and exterior signs identifying permanent rooms and **spaces** shall comply with 703.1, 703.2, and 703.5. Where **pictograms** are provided as designations of permanent interior rooms and **spaces**, the **pictograms** shall comply with 703.6 and shall have text descriptors complying with 703.2 and 703.5.

EXCEPTION: Exterior signs that are not located at the door to the **space** they serve shall not be required to comply with 703.2.

216.3 Directional and Informational Signs. Signs that provide direction to or information about interior **spaces** and **facilities** of the **site** shall comply with 703.5.

216.4 Means of Egress. Signs for means of egress shall comply with 216.4.

216.4.1 Exit Doors. Doors at exit passageways, exit discharge, and exit stairways shall be identified by **tactile** signs complying with 703.1, 703.2, and 703.5.

216.4.2 Areas of Refuge. *Signs required by 506.11* to provide instructions in **areas of refuge** shall comply with 703.5.

216.4.3 Directional Signs. *Signs required by 506.10* to provide directions to accessible means of egress shall comply with 703.5.

216.5 Parking. Parking spaces complying with 502 shall be identified by signs complying with 502.6.

EXCEPTIONS:

1. *[Deleted]*.

2. In residential **facilities**, where parking spaces are assigned to specific **residential dwelling units**, identification of accessible parking spaces shall not be required.

216.6 Entrances. Where not all **entrances** comply with 404, **entrances** complying with 404 shall be identified by the International Symbol of Accessibility complying with 703.7.2.1. Directional signs complying with 703.5 that indicate the location of the nearest **entrance** complying with 404 shall be provided at **entrances** that do not comply with 404.

216.7 Elevators. Where existing elevators do not comply with 407, elevators complying with 407 shall be clearly identified with the International Symbol of Accessibility complying with 703.7.2.1.

216.8 Toilet Rooms and Bathing Rooms. Where existing toilet rooms or bathing rooms do not comply with 603, directional signs indicating the location of the nearest toilet room or bathing room complying with 603 within the **facility** shall be provided. Signs shall comply with 703.5 and shall include the International Symbol of Accessibility complying with 703.7.2.1. Where existing toilet rooms or bathing rooms do not comply with 603, the toilet rooms or bathing rooms complying with 603 shall be identified by the International Symbol of Accessibility complying with 703.7.2.1. Where clustered single user toilet rooms or bathing **facilities** are permitted to use exceptions to 213.2, toilet rooms or bathing **facilities** complying with 603 shall be identified by the International Symbol of Accessibility complying with 703.7.2.1 unless all toilet rooms and bathing **facilities** comply with 603.

216.9 TTYs. Identification and directional signs for **public TTYs** shall be provided in accordance with 216.9.

216.9.1 Identification Signs. Public TTYs shall be identified by the International Symbol of **TTY** complying with 703.7.2.2.

216.9.2 Directional Signs. Directional signs indicating the location of the nearest **public TTY** shall be provided at all banks of **public** pay telephones not containing a **public TTY**. In addition, where signs provide direction to **public** pay telephones, they shall also provide direction to **public TTY**s. Directional signs shall comply with 703.5 and shall include the International Symbol of **TTY** complying with 703.7.2.2.

216.10 Assistive Listening Systems. Each **assembly area** required by 219 to provide **assistive listening systems** shall provide signs informing patrons of the availability of the **assistive listening system**. Assistive listening signs shall comply with 703.5 and shall include the International Symbol of Access for Hearing Loss complying with 703.7.2.4.

EXCEPTION: Where ticket offices or windows are provided, signs shall not be required at each **assembly area** provided that signs are displayed at each ticket office or window informing patrons of the availability of **assistive listening systems**.

216.11 Check-Out Aisles. Where more than one check-out aisle is provided, check-out aisles complying with 904.3 shall be identified by the International Symbol of Accessibility complying with 703.7.2.1. Where check-out aisles are identified by numbers, letters, or functions, signs identifying check-out aisles complying with 904.3 shall be located in the same location as the check-out aisle identification.

EXCEPTION: Where all check-out aisles serving a single function comply with 904.3, signs complying with 703.7.2.1 shall not be required.

216.12 Amusement Rides. Signs identifying the type of access provided on **amusement rides** shall be provided at entries to queues and waiting lines. In addition, where accessible unload areas also serve as accessible load areas, signs indicating the location of the accessible load and unload areas shall be provided at entries to queues and waiting lines.

216.13 Trailhead Signs. Where new **trail** information signs are provided at **trailheads** on newly constructed or altered **trails** designed for use by hikers or pedestrians, the signs shall comply with 1017.10.

217 Telephones

217.1 General. Where coin-operated **public** pay telephones, coinless **public** pay telephones, **public closed-circuit telephones**, **public** courtesy phones, or other types of **public** telephones are provided, **public** telephones shall be provided in accordance with 217 for each type of **public** telephone provided. For purposes of this section, a bank of telephones shall be considered to be two or more adjacent telephones.

217.2 Wheelchair Accessible Telephones. Where **public** telephones are provided, wheelchair accessible telephones complying with 704.2 shall be provided in accordance with Table 217.2.

EXCEPTION: Drive-up only **public** telephones shall not be required to comply with 217.2.

Table 217.2 Wheelchair Accessible Telephones

Number of Telephones Provided on a Floor, Level, or Exterior Site	Minimum Number of Required Wheelchair Accessible Telephones
1 or more single units	1 or more single units
1 bank	1 bank
2 or more banks	2 or more banks

217.3 Volume Controls. All **public** telephones shall have volume controls complying with 704.3.

217.4 TTYs. TTYs complying with 704.4 shall be provided in accordance with 217.4.

217.4.1 Bank Requirement. Where four or more **public** pay telephones are provided at a bank of telephones, at least one **public TTY** complying with 704.4 shall be provided at that bank.

EXCEPTION: TTYs shall not be required at banks of telephones located within 200 feet (61 m) of, and on the same floor as, a bank containing a **public TTY**.

217.4.2 Floor Requirement. TTYs in **public buildings** shall be provided in accordance with 217.4.2.1. **TTYs** in private **buildings** shall be provided in accordance with 217.4.2.2.

217.4.2.1 Public Buildings. Where at least one **public** pay telephone is provided on a floor of a **public building**, at least one **public TTY** shall be provided on that floor.

217.4.2.2 Private Buildings. Where four or more **public** pay telephones are provided on a floor of a private **building**, at least one **public TTY** shall be provided on that floor.

217.4.3 Building Requirement. TTYs in **public buildings** shall be provided in accordance with 217.4.3.1. **TTYs** in private **buildings** shall be provided in accordance with 217.4.3.2.

217.4.3.1 Public Buildings. Where at least one **public** pay telephone is provided in a **public building**, at least one **public TTY** shall be provided in the **building**. Where at least one **public** pay telephone is provided in a **public use** area of a **public building**, at least one **public TTY** shall be provided in the **public building** in a **public use** area.

217.4.3.2 Private Buildings. Where four or more **public** pay telephones are provided in a private **building**, at least one **public TTY** shall be provided in the **building**.

217.4.4 Exterior Site Requirement. Where four or more **public** pay telephones are provided on an exterior **site**, at least one **public TTY** shall be provided on the **site**.

217.4.5 Rest Stops, Emergency Roadside Stops, and Service Plazas. Where at least one **public** pay telephone is provided at a public rest stop, emergency roadside stop, or service plaza, at least one **public TTY** shall be provided.

217.4.6 Hospitals. Where at least one **public** pay telephone is provided serving a hospital emergency room, hospital recovery room, or hospital waiting room, at least one **public TTY** shall be provided at each location.

217.4.7 Transportation Facilities. In transportation **facilities**, in addition to the requirements of 217.4.1 through 217.4.4, where at least one **public** pay telephone serves a particular **entrance** to a bus or rail **facility**, at least one **public TTY** shall be provided to serve that **entrance**. In airports, in addition to the requirements of 217.4.1 through 217.4.4, where four or more **public** pay telephones are located in a terminal outside the security areas, a concourse within the security areas, or a baggage claim area in a terminal, at least one **public TTY** shall be provided in each location.

217.4.8 Detention and Correctional Facilities. In detention and correctional **facilities**, where at least one pay telephone is provided in a secured area used only by detainees or inmates and security personnel, at least one **TTY** shall be provided in at least one secured area.

217.5 Shelves for Portable TTYs. Where a bank of telephones in the interior of a **building** consists of three or more **public** pay telephones, at least one **public** pay telephone at the bank shall be provided with a shelf and an electrical outlet in accordance with 704.5.

EXCEPTIONS:

1. Secured areas of detention and correctional **facilities** where shelves and outlets are prohibited for purposes of security or safety shall not be required to comply with 217.5.

2. The shelf and electrical outlet shall not be required at a bank of telephones with a **TTY**.

218 Transportation Facilities

218.1 General. Transportation **facilities** shall comply with 218.

218.2 New and Altered Fixed Guideway Stations. New and altered stations in rapid rail, light rail, commuter rail, intercity rail, high speed rail, and other fixed guideway systems shall comply with 810.5 through 810.10.

218.3 Key Stations and Existing Intercity Rail Stations. Key stations and existing intercity rail stations shall comply with 810.5 through 810.10.

218.4 Bus Shelters. Where provided, bus shelters shall comply with 810.3.

218.5 Other Transportation Facilities. In other transportation **facilities**, public address systems shall comply with 810.7 and clocks shall comply with 810.8.

219 Assistive Listening Systems

219.1 General. Assistive listening systems shall be provided in accordance with 219 and shall comply with 706.

219.2 Required Systems. In each **assembly area** where audible communication is integral to the use of the **space**, an **assistive listening system** shall be provided.

EXCEPTION: Other than in courtrooms, **assistive listening systems** shall not be required where audio amplification is not provided.

219.3 Receivers. Receivers complying with 706.2 shall be provided for **assistive listening systems** in each **assembly area** in accordance with Table 219.3. Twenty-five percent minimum of receivers provided, but no fewer than two, shall be hearing-aid compatible in accordance with 706.3.

EXCEPTIONS:

1. Where a **building** contains more than one **assembly area** and the assembly areas required to provide **assistive listening systems** are under one management, the total number of required receivers shall be permitted to be calculated according to the total number of seats in the assembly areas in the **building** provided that all receivers are usable with all systems.

2. Where all seats in an **assembly area** are served by an induction loop **assistive listening system**, the minimum number of receivers required by Table 219.3 to be hearing-aid compatible shall not be required to be provided.

Table 219.3 Receivers for Assistive Listening Systems

Capacity of Seating in Assembly Area	Minimum Number of Required Receivers	Minimum Number of Required Receivers Required to be Hearing-aid Compatible
50 or less	2	2
51 to 200	2, plus 1 per 25 seats over 50 seats[1]	2
201 to 500	2, plus 1 per 25 seats over 50 seats[1]	1 per 4 receivers[1]
501 to 1000	20, plus 1 per 33 seats over 500 seats[1]	1 per 4 receivers[1]
1001 to 2000	35, plus 1 per 50 seats over 1000 seats[1]	1 per 4 receivers[1]
2001 and over	55 plus 1 per 100 seats over 2000 seats[1]	1 per 4 receivers[1]

Note:
1. Or fraction thereof.

220 Automatic Teller Machines and Fare Machines

220.1 General. Where automatic teller machines or self-service fare vending, collection, or adjustment machines are provided, at least one of each type provided at each location shall comply with 707. Where bins are provided for envelopes, waste paper, or other purposes, at least one of each type shall comply with 811.

221 Assembly Areas

221.1 General. Assembly areas shall provide **wheelchair spaces**, companion seats, and designated aisle seats complying with **221** and **802**. In addition, lawn seating shall comply with 221.5.

221.2 Wheelchair Spaces. Wheelchair spaces complying with 221.2 shall be provided in **assembly areas** with fixed seating.

221.2.1 Number and Location. Wheelchair spaces shall be provided complying with 221.2.1.

221.2.1.1 General Seating. Wheelchair spaces complying with 802.1 shall be provided in accordance with Table 221.2.1.1.

Table 221.2.1.1 Number of Wheelchair Spaces in Assembly Areas

Number of Seats	Minimum Number of Required Wheelchair Spaces
4 to 25	1
26 to 50	2
51 to 150	4
151 to 300	5
301 to 500	6
501 to 5000	6, plus 1 for each 150, or fraction thereof, between 501 through 5000
5001 and over	36, plus 1 for each 200, or fraction thereof, over 5000

221.2.1.2 Luxury Boxes, Club Boxes, and Suites in Arenas, Stadiums, and Grandstands. In each luxury box, club box, and suite within arenas, stadiums, and grandstands, **wheelchair spaces** complying with 802.1 shall be provided in accordance with Table 221.2.1.1.

221.2.1.3 Other Boxes. In boxes other than those required to comply with 221.2.1.2, the total number of **wheelchair spaces** required shall be determined in accordance with Table 221.2.1.1. **Wheelchair spaces** shall be located in not less than 20 percent of all boxes provided. **Wheelchair spaces** shall comply with 802.1.

221.2.1.4 Team or Player Seating. At least one **wheelchair space** complying with 802.1 shall be provided in team or player seating areas serving **areas of sport activity**.

EXCEPTION: Wheelchair spaces shall not be required in team or player seating areas serving bowling lanes not required to comply with 206.2.11.

221.2.2 Integration. Wheelchair spaces shall be an integral part of the seating plan.

221.2.3 Lines of Sight and Dispersion. Wheelchair spaces shall provide lines of sight complying with 802.2 and shall comply with 221.2.3. In providing lines of sight, **wheelchair spaces** shall be dispersed. **Wheelchair spaces** shall provide spectators with choices of seating locations and viewing angles that are substantially equivalent to or better than, the choices of seating locations and viewing angles available to all other spectators. When the number of **wheelchair spaces** required by 221.2.1 has been met, further dispersion shall not be required. **Wheelchair spaces** and companion seats shall not be located on (or obstructed by) **temporary** platforms or other movable structures, except that when an entire seating section is placed on **temporary** platforms or other movable structures in an area where fixed seating is not provided, in order to increase seating for an event, **wheelchair spaces** and companion seats may be placed in that section. When **wheelchair spaces** and companion seats are not required to accommodate persons eligible for those spaces and seats, individual, *readily removable* seats may be placed in those spaces and seats.

EXCEPTION: Wheelchair spaces in team or player seating areas serving **areas of sport activity** shall not be required to comply with 221.2.3.

221.2.3.1 Horizontal Dispersion. Wheelchair spaces shall be dispersed horizontally. In **assembly areas** that are required to horizontally disperse **wheelchair spaces** and companion seats and that have seating encircling, in whole or in part, a field of play or performance, **wheelchair spaces** and companion seats shall be dispersed around that field of play or performance area.

EXCEPTIONS:

1. Horizontal dispersion shall not be required in **assembly areas** with 300 or fewer seats if the companion seats required by 221.3 and **wheelchair spaces** are located within the 2nd or 3rd quartile of the total row length. Intermediate aisles shall be included in determining the total row length. If the row length in the 2nd and 3rd quartile of a row is insufficient to accommodate the required number of companion seats and **wheelchair spaces**, the additional companion seats and **wheelchair spaces** shall be permitted to be located in the 1st and 4th quartile of the row.

2. In row seating, two **wheelchair spaces** shall be permitted to be located side-by-side.

221.2.3.2 Vertical Dispersion. Wheelchair spaces shall be dispersed vertically at varying distances from the screen, performance area, or playing field. In addition, **wheelchair spaces** shall be located in each balcony or **mezzanine** that is located on an **accessible route**. In

stadiums, arenas, and grandstands, **wheelchair spaces** and companion seats shall be dispersed to all levels that include seating served by an **accessible route**.

EXCEPTIONS:

1. Vertical dispersion shall not be required in **assembly areas** with 300 or fewer seats if the **wheelchair spaces** provide viewing angles that are equivalent to, or better than, the average viewing angle provided in the **facility**.

2. In bleachers, **wheelchair spaces** shall not be required to be provided in rows other than rows at points of entry to bleacher seating.

221.2.3.2.1 Stadium-Style Movie Theaters. In stadium-style movie theaters, **wheelchair spaces** and companion seats shall be located on a riser or cross-aisle in the stadium section that either 1) is located within the rear 60% of the seats provided in an auditorium, or 2) is located within the area of an auditorium in which the vertical viewing angles (as measured to the top of the screen) are from the 40th to the 100th percentile of vertical viewing angles for all seats as ranked from the seats in the first row (1st percentile) to seats in the back row (100th percentile).

221.3 Companion Seats. At least one companion seat complying with 802.3 shall be provided for each **wheelchair space** required by 221.2.1.

221.4 Designated Aisle Seats. At least 5 percent of the total number of aisle seats provided shall comply with 802.4 and shall be the aisle seats located closest to **accessible routes**.

EXCEPTION: Team or player seating areas serving **areas of sport activity** shall not be required to comply with 221.4.

221.5 Lawn Seating. Lawn seating areas and exterior overflow seating areas, where fixed seats are not provided, shall connect to an **accessible route**.

222 Dressing, Fitting, and Locker Rooms

222.1 General. Where dressing rooms, fitting rooms, or locker rooms are provided, at least 5 percent, but no fewer than one, of each type of use in each cluster provided shall comply with 803.

EXCEPTION: In **alterations**, where it is **technically infeasible** to provide rooms in accordance with 222.1, one room for each sex on each level shall comply with 803. Where only unisex rooms are provided, unisex rooms shall be permitted.

222.2 ***Coat Hooks, Shelves and Mirrors.*** Where *coat hooks, shelves or mirrors* are provided in dressing, fitting or locker rooms without individual compartments, at least one of each type shall comply with 803.5 *and 803.6*. Where *coat hooks, shelves or mirrors* are provided in individual compartments at least one of each type complying with 803.5 *and 803.6* shall be provided in individual compartments in dressing, fitting, or locker rooms required to comply with 222.1.

222.3 Mirrors. *Where mirrors are provided in dressing rooms of the same use, then a mirror complying with 803.6 shall be provided in an accessible dressing room.*

223 Medical Care and Long-Term Care Facilities

223.1 General. In licensed medical care **facilities** and licensed long-term care **facilities** where the period of stay exceeds twenty-four hours, patient or resident sleeping rooms shall be provided in accordance with 223.

EXCEPTION: Toilet rooms that are part of critical or intensive care patient sleeping rooms shall not be required to comply with 603.

223.1.1 Alterations. Where sleeping rooms are altered or added, the requirements of 223 shall apply only to the sleeping rooms being altered or added until the number of sleeping rooms complies with the minimum number required for new construction.

223.2 Hospitals, Rehabilitation Facilities, Psychiatric Facilities, and Detoxification Facilities. Hospitals, rehabilitation **facilities**, psychiatric **facilities** and detoxification **facilities** shall comply with 223.2.

223.2.1 Facilities Not Specializing in Treating Conditions That Affect Mobility. In **facilities** not specializing in treating conditions that affect mobility, at least 10 percent, but no fewer than one, of the patient sleeping rooms shall provide mobility features complying with 805. The accessible patient bedrooms required by 223.2.1 shall be dispersed in a manner that is proportionate by type of medical specialty.

223.2.2 Facilities Specializing in Treating Conditions That Affect Mobility. In **facilities** specializing in treating conditions that affect mobility, 100 percent of the patient sleeping rooms shall provide mobility features complying with 805.

223.3 Long-Term Care Facilities. In licensed long-term care **facilities**, at least 50 percent, but no fewer than one, of each type of resident sleeping room shall provide mobility features complying with 805.

224 Transient Lodging Guest Rooms

224.1 General. Transient lodging facilities shall provide guest rooms in accordance with 224. *NOTE: This section also applies to social service center establishments as set forth in in 233.4, and to assisted living **facilities** as set forth in 233.7.*

224.1.1 Alterations. Where guest rooms are altered or added, the requirements of 224 shall apply only to the guest rooms being altered or added until the number of guest rooms complies with the minimum number required for new construction.

EXCEPTION: Alterations to guest rooms in places of lodging where the guest rooms are not owned or substantially controlled by the entity that owns, leases, or operates the overall **facility** and the physical features of the guest room interiors are controlled by their individual **owners** are not required to comply with the **alterations** requirements in this section.

224.1.2 Guest Room Doors and Doorways. Entrances, doors, and doorways providing user passage into and within guest rooms that are not required to provide mobility features complying with 806.2 shall comply with 404.2.3. *Door handles and pulls shall comply with 404.2.7.*

EXCEPTION: Shower and sauna doors in guest rooms that are not required to provide mobility features complying with 806.2 shall not be required to comply with 404.2.3 *or 404.2.7.*

224.2 Guest Rooms with Mobility Features. In **transient lodging facilities**, guest rooms with mobility features complying with 806.2 shall be provided in accordance with Table 224.2.

Table 224.2 Guest Rooms with Mobility Features [1]

Total Number of Guest Rooms Provided	Minimum Number of Required Rooms without Roll-in Showers	Minimum Number of Required Rooms with Roll-in Showers	Total Number of Required Rooms
1 to 25	1	0	1
26 to 50	2	0	2
51 to 75	3	1	4

76 to 100	4	1	5
101 to 150	5	2	7
151 to 200	6	2	8
201 to 300	7	3	10
301 to 400	8	4	12
401 to 500	9	4	13
501 to 1000	2 percent of total	1 percent of total	3 percent of total
1001 and over	20, plus 1 for each 100, or fraction thereof, over 1000	10, plus 1 for each 100, or fraction thereof, over 1000	30, plus 2 for each 100, or fraction thereof, over 1000

Note:
1. Facilities that are subject to the same permit application on a common site that each have 50 or fewer guest rooms may be combined for the purposes of determining the required number of accessible rooms and type of accessible bathing facility. Facilities with more than 50 guest rooms shall be treated separately for the purposes of determining the required number of accessible rooms and type of accessible bathing facility.

224.3 Beds. In guest rooms having more than 25 beds, 5 percent minimum of the beds shall have clear floor space complying with 806.2.3.

224.4 Guest Rooms with Communication Features. In ***transient lodging facilities***, guest rooms with communication features complying with 806.3 shall be provided in accordance with Table 224.4.

Table 224.4 Guest Rooms with Communication Features

Total Number of Guest Rooms Provided	Minimum Number of Required Guest Rooms With Communication Features
2 to 25	2
26 to 50	4
51 to 75	7
76 to 100	9
101 to 150	12
151 to 200	14
201 to 300	17
301 to 400	20
401 to 500	22
501 to 1000	5 percent of total

1001 and over	50, plus 3 for each 100 over 1000

224.5 Dispersion. Guest rooms required to provide mobility features complying with 806.2 and guest rooms required to provide communication features complying with 806.3 shall be dispersed among the various classes of guest rooms, and shall provide choices of types of guest rooms, number of beds, and other amenities comparable to the choices provided to other guests. Where the minimum number of guest rooms required to comply with 806 is not sufficient to allow for complete dispersion, guest rooms shall be dispersed in the following priority: guest room type, number of beds, and amenities. At least one guest room required to provide mobility features complying with 806.2 shall also provide communication features complying with 806.3. Not more than 10 percent of guest rooms required to provide mobility features complying with 806.2 shall be used to satisfy the minimum number of guest rooms required to provide communication features complying with 806.3.

225 Storage

225.1 General. Storage **facilities** shall comply with 225.

225.2 Storage. Where storage is provided in accessible **spaces**, at least one of each type shall comply with 811.

EXCEPTION: *Archival storage areas and product storage areas that are exempt from the requirement for an* ***accessible route*** *by 206.2.3 Exception 8 are not required to be accessible.*

225.2.1 Lockers. Where lockers are provided, at least 5 percent, but no fewer than one of each type, shall comply with 811.

225.2.2 Self-Service Shelving. Self-service shelves shall be located on an **accessible route** complying with 402. Self-service shelving shall not be required to comply with 308. *Aisles between stacks in libraries shall comply with 403.5.4.*

225.3 Self-Service Storage Facilities. Self-service storage facilities shall provide individual **self-service storage spaces** complying with these requirements in accordance with Table 225.3.

Table 225.3 Self-Service Storage Facilities

Total Spaces in Facility	Minimum Number of Spaces Required to be Accessible
1 to 200	5 percent, but no fewer than 1

201 and over	10, plus 2 percent of total number of units over 200

225.3.1 Dispersion. Individual **self-service storage spaces** shall be dispersed throughout the various classes of **spaces** provided. Where more classes of **spaces** are provided than the number required to be accessible, the number of **spaces** shall not be required to exceed that required by Table 225.3. **Self-service storage spaces** complying with Table 225.3 shall not be required to be dispersed among **buildings** in a multi-building **facility**.

226 Dining Surfaces and Work Surfaces

226.1 General. Where dining surfaces are provided for the consumption of food or drink, at least 5 percent of the seating spaces and standing spaces at the dining surfaces shall comply with 902. In addition, where work surfaces are provided for use by other than employees, at least 5 percent shall comply with 902.

EXCEPTIONS:

1. Sales counters and service counters shall not be required to comply with 902.

2. Check writing surfaces provided at check-out aisles not required to comply with 904.3 shall not be required to comply with 902.

226.2 Dispersion. Dining surfaces and work surfaces required to comply with 902 shall be dispersed throughout the **space** or **facility** containing dining surfaces and work surfaces.

227 Sales and Service

227.1 General. Where provided, check-out aisles, sales counters, service counters, food service lines, queues, and waiting lines shall comply with 227 and 904.

227.2 Check-Out Aisles. Where check-out aisles are provided, check-out aisles complying with 904.3 shall be provided in accordance with Table 227.2. Where check-out aisles serve different functions, check-out aisles complying with 904.3 shall be provided in accordance with Table 227.2 for each function. Where check-out aisles are dispersed throughout the **building** or **facility**, check-out aisles complying with 904.3 shall be dispersed.

EXCEPTION: Where the selling space is under 5000 square feet (465 m^2) no more than one check-out aisle complying with 904.3 shall be required.

Table 227.2 Check-Out Aisles	
Number of Check-Out Aisles of Each Function	**Minimum Number of Check-Out Aisles of Each Function Required to Comply with 904.3**
1 to 4	1
5 to 8	2
9 to 15	3
16 and over	3, plus 20 percent of additional aisles

227.2.1 Altered Check-Out Aisles. Where check-out aisles are altered, at least one of each check-out aisle serving each function shall comply with 904.3 until the number of check-out aisles complies with 227.2.

227.3 Counters. Where provided, at least one of each type of sales counter and service counter shall comply with 904.4. Where counters are dispersed throughout the **building** or **facility**, counters complying with 904.4 also shall be dispersed.

227.4 Food Service Lines. Food service lines shall comply with 904.5. Where self-service shelves are provided, at least 50 percent, but no fewer than one, of each type provided shall comply with 308.

227.5 Queues and Waiting Lines. Queues and waiting lines servicing counters or check-out aisles required to comply with 904.3 or 904.4 shall comply with 403.

228 Depositories, Vending Machines, Change Machines, Mail Boxes, and Fuel Dispensers

228.1 General. Where provided, at least one of each type of depository, vending machine, change machine, and fuel dispenser shall comply with 309.

EXCEPTION: Drive-up only depositories shall not be required to comply with 309.

228.2 Mail Boxes. Where **mail boxes** are provided in an interior location, at least 5 percent, but no fewer than one, of each type shall comply with 309. In residential **facilities** *covered by 233.2 or 233.3*, where **mail boxes** are provided for each **residential dwelling unit**, **mail boxes** complying with 309 shall be provided for each **residential dwelling unit** required to provide mobility features complying with 809.2 through 809.4.

229 Windows

229.1 General. Where glazed openings are provided in accessible rooms or **spaces** for operation by occupants, at least one opening shall comply with 309. Each glazed opening required by an **administrative authority** to be operable shall comply with 309.

EXCEPTION:

1. Glazed openings in **residential dwelling units** required to comply with 809 shall not be required to comply with 229.

2. Glazed openings in guest rooms required to provide communication features and in guest rooms required to comply with 206.5.3 shall not be required to comply with 229.

230 Two-Way Communication Systems

230.1 General. Where a two-way communication system is provided to gain admittance to a **building** or **facility** or to restricted areas within a **building** or **facility**, the system shall comply with 708.

231 Judicial Facilities

231.1 General. Judicial **facilities** shall comply with 231.

231.2 Courtrooms. Each courtroom shall comply with 808.

231.3 Holding Cells. Where provided, central holding cells and court-floor holding cells shall comply with 231.3.

231.3.1 Central Holding Cells. Where separate central holding cells are provided for adult male, juvenile male, adult female, or juvenile female, one of each type shall comply with 807.2. Where central holding cells are provided and are not separated by age or sex, at least one cell complying with 807.2 shall be provided.

231.3.2 Court-Floor Holding Cells. Where separate court-floor holding cells are provided for adult male, juvenile male, adult female, or juvenile female, each courtroom shall be served by one cell of each type complying with 807.2. Where court-floor holding cells are provided and are not separated by age or sex, courtrooms shall be served by at least one cell complying with 807.2. Cells may serve more than one courtroom.

231.4 Visiting Areas. Visiting areas shall comply with 231.4.

231.4.1 Cubicles and Counters. At least 5 percent, but no fewer than one, of cubicles shall comply with 902 on both the visitor and detainee sides. Where counters are provided, at least one shall comply with 904.4.2 on both the visitor and detainee sides.

EXCEPTION: The detainee side of cubicles or counters at non-contact visiting areas not serving holding cells required to comply with 231 shall not be required to comply with 902 or 904.4.2.

231.4.2 Partitions. Where solid partitions or security glazing separate visitors from detainees at least one of each type of cubicle or counter partition shall comply with 904.6.

232 Detention Facilities and Correctional Facilities

232.1 General. Buildings, **facilities**, or portions thereof, in which people are detained for penal or correction purposes, or in which the liberty of the inmates is restricted for security reasons shall comply with 232.

232.2 General Holding Cells and General Housing Cells. General holding cells and general housing cells shall be provided in accordance with 232.2.

232.2.1 Cells with Mobility Features. At least 3 percent, but no fewer than one, of the total number of cells in a **facility** shall provide mobility features complying with 807.2. Cells shall be provided in each classification level.

EXCEPTION: Alterations to cells shall *comply with 232.6*.

232.2.1.1 Beds. In cells having more than 25 beds, at least 5 percent of the beds shall have clear floor space complying with 807.2.3.

232.2.2 Cells with Communication Features. At least *3 percent*, but no fewer than one, of the total number of general holding cells and general housing cells equipped with audible emergency alarm systems and permanently installed telephones within the cell shall provide communication features complying with 807.3. *Cells shall be provided in each classification level.*

EXCEPTION: Alterations to cells shall comply with 232.6.

232.3 Special Holding Cells and Special Housing Cells. Where special holding cells or special housing cells are provided, at least one cell serving each purpose shall provide mobility features complying with 807.2. Cells subject to this requirement include, but are not limited to, those used for purposes of orientation, protective custody, administrative or disciplinary detention or segregation, detoxification, and medical isolation.

EXCEPTION: *[Deleted]*.

232.4 Medical Care Facilities. Patient bedrooms or cells required to comply with 223 shall be provided in addition to any medical isolation cells required to comply with 232.3.

232.5 Visiting Areas. Visiting areas shall comply with 232.5.

232.5.1 Cubicles and Counters. At least 5 percent, but no fewer than one, of cubicles shall comply with 902 on both the visitor and detainee sides. Where counters are provided, at least one shall comply with 904.4.2 on both the visitor and detainee or inmate sides.

EXCEPTION: The inmate or detainee side of cubicles or counters at non-contact visiting areas not serving holding cells or housing cells required to comply with 232 shall not be required to comply with 902 or 904.4.2.

232.5.2 Partitions. Where solid partitions or security glazing separate visitors from detainees or inmates at least one of each type of cubicle or counter partition shall comply with 904.6.

232.6 Alterations to Cells. Alterations to jails, prisons, and other detention and correctional **facilities** shall comply with 202.3 except that cells complying with 807.2 and 807.3 shall be provided for a minimum of 3%, but no fewer than one, of the total number of cells being altered until at least 3%, but no fewer than one, of the total number of cells comply with 807.2 and 807.3. Altered cells shall be provided in each classification level. However, when **alterations** are made to specific cells, detention and correctional **facility** operators may satisfy their obligation to provide the required number of cells by providing the required features in substitute cells (cells other than those where **alterations** are originally planned), provided that each substitute cell:

(1) Is located within the same prison ***site***;
(2) Is integrated with other cells to the maximum extent feasible;
(3) Has, at a minimum, equal physical access as the altered cells to areas used by inmates or detainees for visitation, dining, recreation, educational programs, medical services, work programs, religious services, and participation in other programs that the ***facility*** offers to inmates or detainees; and,

(4) If it is ***technically infeasible*** to locate a substitute cell within the same prison ***site***, a substitute cell must be provided at another prison ***site*** within the corrections system.

233 Residential Facilities

233.1 General. ***Facilities*** with ***residential dwelling units*** shall comply with 233 *as follows:*

(1) ***Facilities*** *provided by entities subject to the Department of Housing and Urban Development (HUD) Section 504 regulations shall comply with 233.2.*
(2) ***Facilities*** *with* ***residential dwelling units*** *owned or financed by governmental entities not subject to HUD Section 504 regulations shall comply with 233.3.*
(3) *Social service center establishments shall comply with 233.4.*
(4) *Housing at a place of education shall comply with 233.5.*
(5) ***Multi-story housing****, as defined in 106.5, shall comply with 233.6.*
(6) *Assisted living* ***facilities****, not including those that are owned or financed by governmental entities, shall comply with 233.7.*

NOTE: The facilities covered by Section 233, as well as other facilities not covered by this section, may still be subject to other Federal laws such as the Fair Housing Act and Section 504 of the Rehabilitation Act of 1973, as amended. For example, the Fair Housing Act requires that certain residential structures having four or more multi-family ***dwelling units****, regardless of whether they are* ***privately owned*** *or federally assisted; include certain features of accessible and adaptable design according to guidelines established by the U.S. Department of Housing and Urban Development (HUD). These laws and the appropriate regulations should be consulted before proceeding with the design and construction of residential facilities.*

233.2 Residential Dwelling Units Provided by Entities Subject to HUD Section 504 Regulations. Where **facilities** with **residential dwelling units** are provided by entities subject to regulations issued by the Department of Housing and Urban Development (HUD) under Section 504 of the Rehabilitation Act of 1973, as amended, such entities shall provide **residential dwelling units** with mobility features complying with 809.2 through 809.4 in a number required by the applicable HUD regulations. **Residential dwelling units** required to provide mobility features complying with 809.2 through 809.4 shall be on an **accessible route** as required by 206. In addition, such entities shall provide **residential dwelling units** with communication features complying with 809.5 in a number required by the applicable HUD regulations. *Further,* ***facilities*** *that contain five or more* ***residential dwelling units*** *on each project* ***site*** *shall comply with 233.6 and 812.* Entities subject to 233.2 shall not be required to comply with 233.3.

233.3 Residential Dwelling Units *Owned or Financed by Governmental* Entities Not Subject to HUD Section 504 Regulations. Facilities with **residential dwelling units** *owned or financed by governmental* entities not subject to regulations issued by the Department of Housing and Urban Development (HUD) under Section 504 of the Rehabilitation Act of 1973, as amended, shall comply with 233.3.

233.3.1 Minimum Number: New Construction. Newly constructed **facilities** with **residential dwelling units** shall comply with 233.3.1.

EXCEPTION: Where **facilities** contain 15 or fewer **residential dwelling units**, the requirements of 233.3.1.1 and 233.3.1.2 shall apply to the total number of **residential dwelling units** that are constructed under a single contract, or are developed as a whole, whether or not located on a common **site**.

233.3.1.1 Residential Dwelling Units with Mobility Features. In **facilities** with **residential dwelling units**, at least 5 percent, but no fewer than one unit, of the total number of **residential dwelling units** shall provide mobility features complying with 809.2 through 809.4 and shall be on an **accessible route** as required by 206. *Additionally, **facilities** that contain five or more **residential dwelling units** on each project **site** shall comply with 233.6 and 812.*

233.3.1.2 Residential Dwelling Units with Communication Features. In **facilities** with **residential dwelling units**, at least 2 percent, but no fewer than one unit, of the total number of **residential dwelling units** shall provide communication features complying with 809.5.

233.3.2 Residential Dwelling Units for Sale. Residential dwelling units offered for sale shall provide accessible features to the extent required by regulations issued by Federal agencies under the Americans with Disabilities Act or Section 504 of the Rehabilitation Act of 1973, as amended.

233.3.3 Additions. Where an **addition** to an existing **building** results in an increase in the number of **residential dwelling units**, the requirements of 233.3.1 shall apply only to the **residential dwelling units** that are added until the total number of **residential dwelling units** complies with the minimum number required by 233.3.1. **Residential dwelling units** required to comply with 233.3.1.1 shall be on an **accessible route** as required by 206.

233.3.4 Alterations. Alterations shall comply with 233.3.4.

EXCEPTION: Where compliance with 809.2, 809.3, or 809.4 is **technically infeasible**, or where it is **technically infeasible** to provide an **accessible route** to a **residential dwelling unit**,

the entity shall be permitted to alter or construct a comparable **residential dwelling unit** to comply with 809.2 through 809.4 provided that the minimum number of **residential dwelling units** required by 233.3.1.1 and 233.3.1.2, as applicable, is satisfied.

233.3.4.1 Alterations to Vacated Buildings. Where a **building** is vacated for the purposes of **alteration**, and the altered **building** contains more than 15 **residential dwelling units**, at least 5 percent of the **residential dwelling units** shall comply with 809.2 through 809.4 and shall be on an **accessible route** as required by 206. In addition, at least 2 percent of the **residential dwelling units** shall comply with 809.5.

233.3.4.2 Alterations to Individual Residential Dwelling Units. In individual **residential dwelling units**, where a bathroom or a kitchen is substantially altered, and at least one other room is altered, the requirements of 233.3.1 shall apply to the altered **residential dwelling units** until the total number of **residential dwelling units** complies with the minimum number required by 233.3.1.1 and 233.3.1.2. **Residential dwelling units** required to comply with 233.3.1.1 shall be on an **accessible route** as required by 206.

EXCEPTION: Where **facilities** contain 15 or fewer **residential dwelling units**, the requirements of 233.3.1.1 and 233.3.1.2 shall apply to the total number of **residential dwelling units** that are altered under a single contract, or are developed as a whole, whether or not located on a common **site**.

233.3.5 Dispersion. Residential dwelling units required to provide mobility features complying with 809.2 through 809.4 and **residential dwelling units** required to provide communication features complying with 809.5 shall be dispersed among the various types of **residential dwelling units** in the **facility** and shall provide choices of **residential dwelling units** comparable to, and integrated with, those available to other residents.

EXCEPTION: Where multi-**story residential dwelling units** are one of the types of **residential dwelling units** provided, one-**story residential dwelling units** shall be permitted as a substitute for multi-**residential dwelling units** where equivalent **spaces** and amenities are provided in the one-**story residential dwelling unit**.

233.4 Social Service Center Establishments. Group homes, halfway houses, shelters, or similar social service center establishments that provide either **temporary** sleeping accommodations or **residential dwelling units** shall comply with 233 and *806. For the purposes of the application of this section, the terms "sleeping accommodation" and "**dwelling unit**" are intended to be used interchangeably with the term "guest room" as it is used in the requirements for **transient lodging**.*

233.4.1 Rooms with More Than 25 Beds. In sleeping rooms with more than 25 beds covered by this part, a minimum of 5% of the beds shall have clear floor space complying with 806.2.3.

233.4.2 Facilities with More Than 50 Beds. Facilities with more than 50 beds that provide **common use** bathing **facilities** shall provide at least one roll-in shower with a seat that complies with 608. Transfer-type showers are not permitted in lieu of a roll-in shower with a seat, and the exceptions in 608.3 and 608.4 for **residential dwelling units** are not permitted. When separate shower **facilities** are provided for men and for women, at least one roll-in shower shall be provided for each sex.

233.5 Housing at a Place of Education. Housing at a place of education shall comply with the requirements for ***transient lodging*** guest rooms in sections 224 and 806, subject to the exceptions in 233.5.1 through 233.5.3. For the purposes of the application of this section, the term "sleeping room" is intended to be used interchangeably with the term "guest room" as it is used in the requirements for ***transient lodging***.

233.5.1 Kitchens. Kitchens within housing units containing accessible sleeping rooms with mobility features (including suites and clustered sleeping rooms) or on floors containing accessible sleeping rooms with mobility features shall provide turning spaces that comply with 809.2.2 and kitchen work surfaces that comply with 804.3.

233.5.2 Multi-bedroom Units. Multi-bedroom housing units containing accessible sleeping rooms with mobility features shall have an **accessible route** throughout the unit in accordance with 809.2.

233.5.3 Leased Facilities. Apartments or townhouse **facilities** that are provided by or on behalf of a place of education, which are leased on a year-round basis exclusively to graduate students or faculty and do not contain any **public use** or **common use areas** available for educational programming, are not subject to the ***transient lodging*** standards and shall comply with the requirements for residential **facilities** 233 and 809.

233.6 Multi-story Housing. Multi-story housing (buildings *of 4 or more stories containing 10 or more* ***dwelling units****, as defined in 106.5) shall comply with 233.6.*

233.6.1 Common Use and Public Use Spaces. *All* ***common use*** *and* ***public use spaces*** *on all floors (levels) shall be accessible in compliance with the applicable requirements of this* ***Code****.* ***Entrance*** *doors to all individual* ***dwelling units*** *shall comply with 404.*

233.6.2 Site Improvements. *All **site** improvements shall be accessible, including an **accessible route** from the **public** sidewalk, **public** transportation **facilities** and/or parking, if provided, to and through an accessible **entrance**.*

233.6.3 Emergency Warning Systems. *A permanent audible and visual **emergency warning system** complying with 702 shall be provided in all **public use** and **common use areas**. Permanent or portable audible and visual **emergency warning systems** shall be installed on an as-needed basis at the request of an occupant with a **disability** in a minimum of 20% of all units in the building, but not less than one of each type or class of unit provided. If a permanent system is provided, the visual **emergency warning system** shall be arranged so the flashing light beam is visible in all rooms of the **dwelling unit**.*

233.6.4 Required Adaptable Dwelling Units. *The **owner** shall provide not less than 20% of the **dwelling units** as adaptable. Either the accessible or **adaptable dwelling units** shall be distributed throughout the **building** to provide a variety of sizes and locations.*

233.6.5 Adaptable Dwelling Units

233.6.5.1 Design and Construction. Adaptable dwelling units *shall be designed and constructed so they may, upon application by the occupant, be converted to accessible units, with a minimum of **structural changes**, to meet the needs of individuals with different types or degrees of **disability**, and to comply with 812. Costs of conversion for the individual with a **disability** shall be borne by the **owner**.*

233.6.5.2 Accessible Route into and within Units. *An **accessible route** complying with Chapter 4 shall be provided into and within all **adaptable dwelling units** to all rooms and **spaces** and shall provide maneuvering clearance at doors as required by 404.2.4.*

233.6.5.3 Accessible Route to Specific Spaces. *An **accessible route** conforming to Chapter 4 shall be provided into and within all private patios, terraces, balconies, carports and garages designated for use by **adaptable dwelling units**.*

233.6.5.4 Bathrooms. *Bathrooms in **adaptable dwelling units** shall comply with the space requirements of 812.3. Bathrooms shall be designed to allow, when converted to accessible units, for the installation of grab bars, water closets, toilet paper dispensers, mirrors, medicine cabinets, under-lavatory cabinets, in-tub or head-end bathtub seats, faucets, controls, pipe insulation, shower seats, and shower spray units without **structural changes** to the walls, floors or ceilings.*

233.6.5.5 Kitchens and Laundry. *Kitchen appliances and laundry* ***facilities****, if provided in* ***adaptable dwelling units*** *shall comply with 812.4 and 812.5.*

233.6.5.6 Storage. *At least 5%, but not less than one, of each type of personal storage included in the initial construction of* ***adaptable dwelling units*** *shall comply with 811. Kitchen storage shall comply with 812.4.1.*

233.6.5.7 Exemption. Dwelling units *consisting of two stories are exempt from requirements for adaptability, as defined herein, if the required proportion of* ***adaptable dwelling units*** *required by 233.6 is met by other types of units distributed throughout the* ***building****; or, if accessibility to the second floor can be provided by the* ***owner*** *by the installation of a limited-use/limited-application elevator (LULA) complying with 408, a private residence elevator complying with 409 or a platform lift complying with 410 when appropriate and approved by administrative authorities.*

233.7. Assisted Living Facilities. Dwelling units *in assisted living* ***facilities****, not including* ***facilities*** *that are owned or financed by governmental entities, shall comply with the requirements for* ***transient lodging*** *guest rooms in sections 224 and 806. For the purposes of the application of this section, the term "****dwelling unit****" is intended to be used interchangeably with the term "guest room" as it is used in the requirements for* ***transient lodging****.*

234 Amusement Rides

234.1 General. Amusement rides shall comply with 234.

EXCEPTION: Mobile or portable **amusement rides** shall not be required to comply with 234.

234.2 Load and Unload Areas. Load and unload areas serving **amusement rides** shall comply with 1002.3.

234.3 Minimum Number. Amusement rides shall provide at least one **wheelchair space** complying with 1002.4, or at least one **amusement ride seat** designed for transfer complying with 1002.5, or at least one **transfer device** complying with 1002.6.

EXCEPTIONS:

1. **Amusement rides** that are controlled or operated by the rider shall not be required to comply with 234.3.

2. **Amusement rides** designed primarily for children, where children are assisted on and off the ride by an adult, shall not be required to comply with 234.3.

3. **Amusement rides** that do not provide **amusement ride seats** shall not be required to comply with 234.3.

234.4 Existing Amusement Rides. Where existing **amusement rides** are altered, the **alteration** shall comply with 234.4.

234.4.1 Load and Unload Areas. Where load and unload areas serving existing **amusement rides** are newly designed and constructed, the load and unload areas shall comply with 1002.3.

234.4.2 Minimum Number. Where the structural or operational characteristics of an amusement ride are altered to the extent that the amusement ride's performance differs from that specified by the manufacturer or the original design, the amusement ride shall comply with 234.3.

235 Recreational Boating Facilities

235.1 General. Recreational boating **facilities** shall comply with 235.

235.2 Boat Slips. Boat slips complying with 1003.3.1 shall be provided in accordance with Table 235.2. Where the number of **boat slips** is not identified, each 40 feet (12 m) of **boat slip** edge provided along the perimeter of the pier shall be counted as one **boat slip** for the purpose of this section.

Table 235.2 Boat Slips

Total Number of Boat Slips Provided in Facility	Minimum Number of Required Accessible Boat Slips
1 to 25	1
26 to 50	2
51 to 100	3
101 to 150	4
151 to 300	5
301 to 400	6
401 to 500	7
501 to 600	8
601 to 700	9
701 to 800	10
801 to 900	11

901 to 1000	12
1001 and over	12, plus 1 for every 100, or fraction thereof, over 1000

235.2.1 Dispersion. Boat slips complying with 1003.3.1 shall be dispersed throughout the various types of **boat slips** provided. Where the minimum number of **boat slips** required to comply with 1003.3.1 has been met, no further dispersion shall be required.

235.3 Boarding Piers at Boat Launch Ramps. Where **boarding piers** are provided at **boat launch ramps**, at least 5 percent, but no fewer than one, of the **boarding piers** shall comply with 1003.3.2.

236 Exercise Machines and Equipment

236.1 General. At least one of each type of exercise machine and equipment shall comply with 1004.

237 Fishing Piers and Platforms

237.1 General. Fishing piers and platforms shall comply with 1005.

238 Golf Facilities

238.1 General. Golf **facilities** shall comply with 238.

238.2 Golf Courses. Golf courses shall comply with 238.2.

238.2.1 Teeing Grounds. Where one **teeing ground** is provided for a hole, the **teeing ground** shall be designed and constructed so that a golf car can enter and exit the **teeing ground**. Where two **teeing grounds** are provided for a hole, the forward **teeing ground** shall be designed and constructed so that a golf car can enter and exit the **teeing ground**. Where three or more **teeing grounds** are provided for a hole, at least two **teeing grounds**, including the forward **teeing ground**, shall be designed and constructed so that a golf car can enter and exit each **teeing ground**.

EXCEPTION: In existing golf courses, the forward **teeing ground** shall not be required to be one of the **teeing grounds** on a hole designed and constructed so that a golf car can enter and exit the **teeing ground** where compliance is not feasible due to terrain.

238.2.2 Putting Greens. Putting greens shall be designed and constructed so that a golf car can enter and exit the putting green.

238.2.3 Weather Shelters. Where provided, weather shelters shall be designed and constructed so that a golf car can enter and exit the weather shelter and shall comply with 1006.4.

238.3 Practice Putting Greens, Practice Teeing Grounds, and Teeing Stations at Driving Ranges. At least 5 percent, but no fewer than one, of practice putting greens, practice **teeing grounds**, and teeing stations at driving ranges shall be designed and constructed so that a golf car can enter and exit the practice putting greens, practice **teeing grounds**, and teeing stations at driving ranges.

239 Miniature Golf Facilities

239.1 General. Miniature golf **facilities** shall comply with 239.

239.2 Minimum Number. At least 50 percent of holes on miniature golf courses shall comply with 1007.3.

239.3 Miniature Golf Course Configuration. Miniature golf courses shall be configured so that the holes complying with 1007.3 are consecutive. Miniature golf courses shall provide an **accessible route** from the last hole complying with 1007.3 to the course **entrance** or exit without requiring travel through any other holes on the course.

EXCEPTION: One break in the sequence of consecutive holes shall be permitted provided that the last hole on the miniature golf course is the last hole in the sequence.

240 Play Areas

240.1 General. Play areas for children ages 2 and over shall comply with 240. Where separate **play areas** are provided within a **site** for specific age groups, each **play area** shall comply with 240.

EXCEPTIONS:

1. **Play areas** located in family child care **facilities** where the proprietor actually resides shall not be required to comply with 240.

2. In existing **play areas**, where **play components** are relocated for the purposes of creating safe **use zones** and the ground surface is not altered or extended for more than one **use zone**, the **play area** shall not be required to comply with 240.

3. **Amusement attractions** shall not be required to comply with 240.

4. Where **play components** are altered and the ground surface is not altered, the ground surface shall not be required to comply with 1008.2.6 unless required by 202.4.

240.1.1 Additions. Where **play areas** are designed and constructed in phases, the requirements of 240 shall apply to each successive **addition** so that when the **addition** is completed, the entire **play area** complies with all the applicable requirements of 240.

240.2 Play Components. Where provided, **play components** shall comply with 240.2.

240.2.1 Ground Level Play Components. Ground level play components shall be provided in the number and types required by 240.2.1. **Ground level play components** that are provided to comply with 240.2.1.1 shall be permitted to satisfy the additional number required by 240.2.1.2 if the minimum required types of **play components** are satisfied. Where two or more required **ground level play components** are provided, they shall be dispersed throughout the **play area** and integrated with other **play components**.

240.2.1.1 Minimum Number and Types. Where **ground level play components** are provided, at least one of each type shall be on an **accessible route** and shall comply with 1008.4.

240.2.1.2 Additional Number and Types. Where **elevated play components** are provided, **ground level play components** shall be provided in accordance with Table 240.2.1.2 and shall comply with 1008.4.

EXCEPTION: If at least 50 percent of the **elevated play components** are connected by a **ramp** and at least 3 of the **elevated play components** connected by the **ramp** are different types of **play components**, the **play area** shall not be required to comply with 240.2.1.2.

Table 240.2.1.2 Number and Types of Ground Level Play Components Required to be on Accessible Routes

Number of Elevated Play Components Provided	Minimum Number of Ground Level Play Components Required to be on an Accessible Route	Minimum Number of Different Types of Ground Level Play Components

		Required to be on an Accessible Route
1	Not applicable	Not applicable
2 to 4	1	1
5 to 7	2	2
8 to 10	3	3
11 to 13	4	3
14 to 16	5	3
17 to 19	6	3
20 to 22	7	4
23 to 25	8	4
26 and over	8, plus 1 for each additional 3, or fraction thereof, over 25	5

240.2.2 Elevated Play Components. Where **elevated play components** are provided, at least 50 percent shall be on an **accessible route** and shall comply with 1008.4.

241 Saunas and Steam Rooms

241 General. Where provided, saunas and steam rooms shall comply with 612.

EXCEPTION: Where saunas or steam rooms are clustered at a single location, no more than 5 percent of the saunas and steam rooms, but no fewer than one, of each type in each cluster shall be required to comply with 612.

242 Swimming Pools, Wading Pools, and Spas

242.1 General. Swimming pools, wading pools, and spas shall comply with 242.

242.2 Swimming Pools. At least two accessible means of entry shall be provided for swimming pools. Accessible means of entry shall be swimming pool lifts complying with 1009.2; sloped entries complying with 1009.3; transfer walls complying with 1009.4; transfer systems complying with 1009.5; and pool stairs complying with 1009.6. At least one accessible means of entry provided shall comply with 1009.2 or 1009.3.

EXCEPTIONS:

1. Where a swimming pool has less than 300 linear feet (91 m) of swimming pool wall, no more than one accessible means of entry shall be required provided that the accessible

means of entry is a swimming pool lift complying with 1009.2 or sloped entry complying with 1009.3.

2. Wave action pools, leisure rivers, sand bottom pools, and other pools where user access is limited to one area shall not be required to provide more than one accessible means of entry provided that the accessible means of entry is a swimming pool lift complying with 1009.2, a sloped entry complying with 1009.3, or a transfer system complying with 1009.5.

3. **Catch pools** shall not be required to provide an accessible means of entry provided that the **catch pool** edge is on an **accessible route**.

242.3 Wading Pools. At least one accessible means of entry shall be provided for wading pools. Accessible means of entry shall comply with sloped entries complying with 1009.3.

242.4 Spas. At least one accessible means of entry shall be provided for spas. Accessible means of entry shall comply with swimming pool lifts complying with1009.2; transfer walls complying with 1009.4; or transfer systems complying with 1009.5.

EXCEPTION: Where spas are provided in a cluster, no more than 5 percent, but no fewer than one, spa in each cluster shall be required to comply with 242.4.

243 Shooting Facilities with Firing Positions

243.1 General. Where shooting **facilities** with firing positions are designed and constructed at a **site**, at least 5 percent, but no fewer than one, of each type of firing position shall comply with 1010.

244 Camping Facilities

244.1 General. Camping facilities, other than **camping facilities** on **trails**, shall comply with 244.

244.2 Camping Units with Mobility Features. Camping facilities shall provide **camping units** with mobility features complying with 244.2 in accordance with Table 244.2. Where a **camping facility** provides different types of **camping units**, Table 244.2 shall apply to each type of **camping unit** provided.

Table 244.2 Camping Units with Mobility Features

Total Number of Camping Units Provided in Camping Facility	Minimum Number of Camping Units with Mobility Features Required
1	1
2 to 25	2
26 to 50	3
51 to 75	4
76 to 100	5
101 to 150	7
151 to 200	8
201 and over	8, plus 2 percent of the number over 200

244.2.1 Alterations and Additions. Where **camping units** are altered or added, the requirements of 244.2 shall apply only to the **camping units** that are altered or added until the number of **camping units** with mobility features complies with the minimum number required in Table 244.2.

> **EXCEPTION:** Where an entity is implementing a transition plan for program accessibility developed pursuant to regulations issued under section 504 of the Rehabilitation Act that designates specific **camping units** to provide mobility features complying with 244.2, the entity shall not be required to comply with 244.2 when altering individual **elements** within **camping units** that are not designated to provide mobility features complying with 244.2.

244.2.2 Dispersion. Camping units required to provide mobility features complying with 244.2 shall provide choices of **camping units** comparable to, and integrated with, those available to others.

244.2.3 Elements within Camping Units with Mobility Features. Elements within **camping units** required to provide mobility features shall comply with 244.2.3.

> **244.2.3.1 Outdoor Constructed Features.** Where provided, at least one of each type of **outdoor constructed feature** shall comply with 1011. Where more than one of the same type of **outdoor constructed feature** is provided, at least two of the same type of **outdoor constructed feature** shall comply with 1011.

> **244.2.3.2 Parking Spaces.** Where provided, parking spaces shall comply with 244.2.3.2.

244.2.3.2.1 Recreational Vehicles. Where parking spaces are provided for recreational vehicles, at least one parking space shall comply with 1012.2, 1012.4, and 1012.5. Where more than one parking space is provided for recreational vehicles, at least two parking spaces shall comply with 1012.2, 1012.4, and 1012.5.

244.2.3.2.2 Vehicles Other Than Recreational Vehicles. Where parking spaces are provided for vehicles other than recreational vehicles, at least one parking space shall comply with 1012.3, 1012.4, and 1012.5. Where more than one parking space is provided for a vehicle other than a recreational vehicle, at least two parking spaces shall comply with 1012.3, 1012.4, and 1012.5.

244.2.3.3 Tent Pads and Tent Platforms. Where provided, at least one tent pad and tent platform shall comply with 1013. Where more than one tent pad and tent platform is provided, at least two tent pads and tent platforms shall comply with 1013.

244.2.3.4 Camp Shelters. Where provided, at least one **camp shelter** shall comply with 1014. Where more than one **camp shelter** is provided, at least two **camp shelters** shall comply with 1014.

244.3 Outdoor Constructed Features in Common Use and Public Use Areas. Where provided in **common use** and **public use** areas that serve **camping units** with mobility features, at least 20 percent, but not less than one, of each type of **outdoor constructed feature** provided at each location shall comply with 1011.

244.4 Pull-up Spaces for Recreational Vehicles at Dump Stations. Where provided, pull-up spaces for recreational vehicles at dump stations shall comply with 1012.2, 1012.4, and 1012.5.

244.5 Outdoor Recreation Access Routes. Camping facilities shall provide outdoor recreation access routes complying with 1016 in accordance with 244.5.

244.5.1 Routes within Camping Units with Mobility Features. At least one outdoor recreation access route shall connect accessible **elements**, **spaces**, and **facilities** provided within **camping units** with mobility features.

244.5.2 Routes to and within Common Use and Public Use Areas. Common use and **public use** areas serving **camping units** with mobility features shall provide outdoor recreation access routes in accordance with 244.5.2.

EXCEPTION: Outdoor recreation access routes shall not be required to connect **camping units** with mobility features and recreational vehicle dump stations where a pull-up space complying with 1012.2, 1012.4, and 1012.5 is provided at the dump station for recreational vehicles.

244.5.2.1 Routes to Common Use and Public Use Areas. At least one outdoor recreation access route shall connect each **camping unit** with mobility features with **common use** and **public use** areas serving the unit.

244.5.2.2 Routes within Common Use and Public Use Areas. At least one outdoor recreation access route shall connect accessible **elements**, **spaces**, and **facilities** provided within **common use** and **public use** areas serving **camping units** with mobility features.

244.5.3 Routes to Adjacent Recreation Facilities. Where a **circulation path** connects **camping facilities** and adjacent recreation **facilities**, at least one outdoor recreation access route shall connect **camping units** with mobility features to an **accessible route** serving the adjacent recreation **facilities**.

244.5.4 Location. Outdoor recreation access routes required by 244.5.2 and 244.5.3 shall coincide with or be located in the same area as general **circulation paths**.

245 Picnic Facilities

245.1 General. Picnic facilities, other than **picnic facilities** on **trails**, shall comply with 245.

245.2 Picnic Units with Mobility Features. Picnic facilities shall provide **picnic units** with mobility features in accordance with 245.2.

245.2.1 Picnic Facilities with Two or Fewer Picnic Units. Where **picnic facilities** contain two or fewer **picnic units**, each **picnic unit** shall provide mobility features complying with 245.2.

245.2.2 Picnic Facilities with More Than Two Picnic Units. Where **picnic facilities** contain more than two **picnic units**, at least 20 percent, but not less than two, of the **picnic units** shall provide mobility features complying with 245.2.

245.2.3 Alterations and Additions. Where **picnic units** are altered or added, the requirements of 245.2 shall apply only to the **picnic units** that are altered or added until

the number of **picnic units** with mobility features complies with the minimum number required in 245.2.1 or 245.2.2.

EXCEPTION: Where an entity is implementing a transition plan for program accessibility developed pursuant to regulations issued under section 504 of the Rehabilitation Act that designates specific **picnic units** to provide mobility features complying with 245.2, the entity shall not be required to comply with 245.2 when altering individual **elements** within **picnic units** that are not designated to provide mobility features complying with 245.2.

245.2.4 Dispersion. **Picnic units** required to provide mobility features complying with 245.2 shall provide choices of **picnic units** comparable to, and integrated with, those available to others.

245.2.5 Elements within Picnic Units with Mobility Features. Elements within **picnic units** required to provide mobility features shall comply with 245.2.5.

245.2.5.1 Outdoor Constructed Features. Where provided, at least one of each type of **outdoor constructed feature** shall comply with 1011. Where more than one of the same type of **outdoor constructed feature** is provided, at least two of the same type of **outdoor constructed feature** shall comply with 1011.

245.2.5.2 Parking Spaces. Where provided, at least one parking space shall comply with 1012.3, 1012.4, and 1012.5. Where more than one parking space is provided, at least two parking spaces shall comply with 1012.3, 1012.4, and 1012.5.

245.3 Outdoor Constructed Features in Common Use and Public Use Areas. Where provided in **common use** and **public use** areas that serve **picnic units** with mobility features, at least 20 percent, but not less than one, of each type of **outdoor constructed feature** provided at each location shall comply with 1011.

245.4 Outdoor Recreation Access Routes. Picnic facilities shall provide outdoor recreation access routes complying with 1016 in accordance with 245.4.

245.4.1 Routes within Picnic Units with Mobility Features. At least one outdoor recreation access route shall connect accessible **elements**, **spaces**, and **facilities** provided within **picnic units** with mobility features.

245.4.2 Routes to and within Common Use and Public Use Areas. Common use and **public use** areas serving **picnic units** with mobility features shall provide outdoor recreation access routes in accordance with 245.4.2.

245.4.2.1 Routes to Common Use and Public Use Areas. At least one outdoor recreation access route shall connect each picnic unit with mobility features with **common use** and **public use** areas serving that unit.

245.4.2.2 Routes within Common Use and Public Use Areas. At least one outdoor recreation access route shall connect accessible **elements**, **spaces**, and **facilities** provided within **common use** and **public use** areas serving **picnic units** with mobility features.

245.4.3 Routes to Adjacent Recreation Facilities. Where a **circulation path** connects **picnic facilities** and adjacent recreation **facilities**, at least one outdoor recreation access route shall connect **picnic units** with mobility features to an **accessible route** serving the adjacent recreation **facilities**.

245.4.4 Location. Outdoor recreation access routes required by 245.4.2 and 245.4.3 shall coincide with or be located in the same area as general **circulation paths**.

246 Viewing Areas

246.1 General. Viewing areas, other than **viewing areas** on **trails**, shall comply with 246.1.

246.2 Distinct Viewing Locations. Each distinct viewing location within a **viewing area** shall comply with 1015.

246.3 Outdoor Constructed Features. Where provided within **viewing areas**, at least 20 percent, but not less than one, of each type of **outdoor constructed feature** shall comply with 1011.

246.4 Outdoor Recreation Access Routes. At least one outdoor recreation access route complying with 1016 shall connect accessible parking spaces or other arrival points serving the a **viewing area** with accessible **elements**, **spaces**, and **facilities** provided within the a **viewing area**.

247 Trails

247.1 General. Where a **trail** is designed for use by hikers or pedestrians and directly connects to a **trailhead** or another **trail** that substantially meets the requirements in 1017, the **trail** shall comply with 1017.

247.2 Existing Trails. Where the original design, function, or purpose of an existing **trail** is changed and the altered portion of the **trail** directly connects to a **trailhead** or another **trail** that substantially meets the requirements in 1017, the altered portion of the **trail** shall comply with 1017.

247.3 Trailheads. Trailheads shall comply with 247.3.

247.3.1 Outdoor Constructed Features. Where provided within **trailheads**, at least 20 percent, but not less than one, of each type of **outdoor constructed feature** shall comply with 1011.

247.3.2 Outdoor Recreation Access Routes. At least one outdoor recreation access route complying with 1016 shall connect the following:

1. Accessible parking spaces or other arrival points serving the **trailhead**;
2. Starting point of the **trail**; and
3. Accessible **elements**, **spaces**, and **facilities** provided within the **trailhead**.

247.4 Trail Facilities. Where provided on **trails**, **facilities** shall comply with 247.4.

247.4.1 Camping Facilities. Camping facilities provided on **trails** shall comply with 244.2 and 244.3.

247.4.2 Picnic Facilities. Picnic facilities provided on **trails** shall comply with 245.2 and 245.3.

247.4.3 Viewing Areas. Viewing areas provided on **trails** shall comply with 246.2 and 246.3.

247.4.4 Routes. Routes that connect **trails** complying with 1017 to **camping facilities**, **picnic facilities**, **viewing areas**, pit toilets, and accessible **elements** provided within the **facilities** shall comply with 1017.

247.5 Outdoor Constructed Features. Where **outdoor constructed features** are provided on **trails**, other than within **facilities** specified in 247.4, at least 20 percent, but not less than one, of each type of **outdoor constructed feature** at each location shall comply with 1011.

CAPITAL DEVELOPMENT BOARD

NOTICE OF ADOPTED RULES

248 Beach Access Routes

248.1 General. Beach access routes complying with 1018 shall be provided in accordance with 248.1. Beach access routes shall be permanent or removable.

EXCEPTION: Beach access routes shall not be required where pedestrian access to the beach is not permitted.

248.1.1 Facilities Serving Beaches. Beach access routes shall be provided in a number complying with 248.2 where the entity that administers or manages a beach constructs or alters any of the following **facilities** to serve the beach:

1. **Circulation paths**;
2. Parking **facilities**;
3. Toilet **facilities**; or
4. Bathing **facilities.**

EXCEPTION: The entity shall not be required to expend more than 20 percent of the costs of constructing or altering the **facilities** to provide beach access routes.

248.1.2 Beach Nourishment. Beach access routes shall be provided in a number complying with 248.2 where the entity that administers or manages a beach undertakes a beach nourishment project.

EXCEPTION: The entity shall not be required to expend more than 20 percent of the costs of a beach nourishment project to provide beach access routes.

248.2 Minimum Number. Where beach access routes are required by 248.1, at least one beach access route shall be provided for each 1/2 mile (0.8 km) of beach shoreline administered or managed by the entity.

EXCEPTION: The number of beach access routes shall not be required to exceed the number of pedestrian access points provided by the entity to a beach.

248.3 Location. Beach access routes shall coincide with or be located in the same area as pedestrian access points to the beach.

249 Benches

249.1 General. *Benches shall comply with 249.*

249.2 Outdoor Locations. *Benches that are provided at recreation* ***facilities*** *shall comply with 244 through 247 as set forth therein. Benches provided at outdoor locations shall comply with 249.2.1.*

249.2.1 Minimum Number. *Where provided, at least one bench at each outdoor location shall comply with 1011. Where more than one bench is provided and serves the same outdoor* ***space****, feature or location, at least 20 percent of the benches shall comply with 1011.*

249.3 Indoor Locations. *Benches provided in courtrooms and judicial* ***facilities*** *shall comply with 206.2.4, 206.7.4 and 808.4 as set forth therein. Benches provided in dressing, fitting and locker rooms shall comply with 803.4. Benches provided in Housing cells and holding cells shall comply with 807.2.2. Benches provided in indoor* ***public use*** *and indoor* ***common use areas*** *shall comply with 249.3.1.*

249.3.1 Minimum Number. *Where provided, at least one bench at each indoor location shall comply with 903. Where more than one bench is provided and serves the same indoor* ***space****, feature or location, at least 20 percent of the benches shall comply with 903.*

CHAPTER 3: BUILDING BLOCKS

301 General

301.1 Scope. The provisions of Chapter 3 shall apply where required by Chapter 2 or where referenced by a requirement in this document.

302 Floor or Ground Surfaces

302.1 General. Floor and ground surfaces shall be stable, firm, and slip resistant and shall comply with 302.

EXCEPTIONS:

1. Within animal containment areas, floor and ground surfaces shall not be required to be stable, firm, and slip resistant.

2. ***Areas of sport activity*** shall not be required to comply with 302.

302.2 Carpet. Carpet or carpet tile shall be securely attached and shall have a firm cushion, pad, or backing or no cushion or pad. Carpet or carpet tile shall have a level loop, textured loop, level cut pile, or level cut/uncut pile texture. Pile height shall be 1/2 inch (13 mm) maximum. Exposed edges of carpet shall be fastened to floor surfaces and shall have trim on the entire length of the exposed edge. Carpet edge trim shall comply with 303.

NOTE: Where a mat is used on a ***temporary*** *or seasonal basis, the mat shall be securely attached or have a backing designed to be non-slip.*

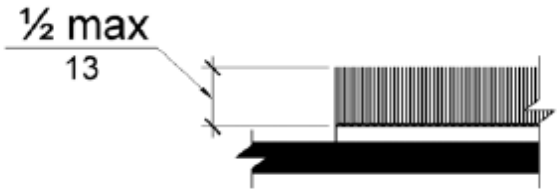

Figure 302.2 Carpet Pile Height

302.3 Openings. Openings in floor or ground surfaces shall not allow passage of a sphere more than 1/2 inch (13 mm) diameter except as allowed in 407.4.3, 409.4.3, 410.4, 810.5.3 and 810.10. Elongated openings shall be placed so that the long dimension is perpendicular to the dominant direction of travel.

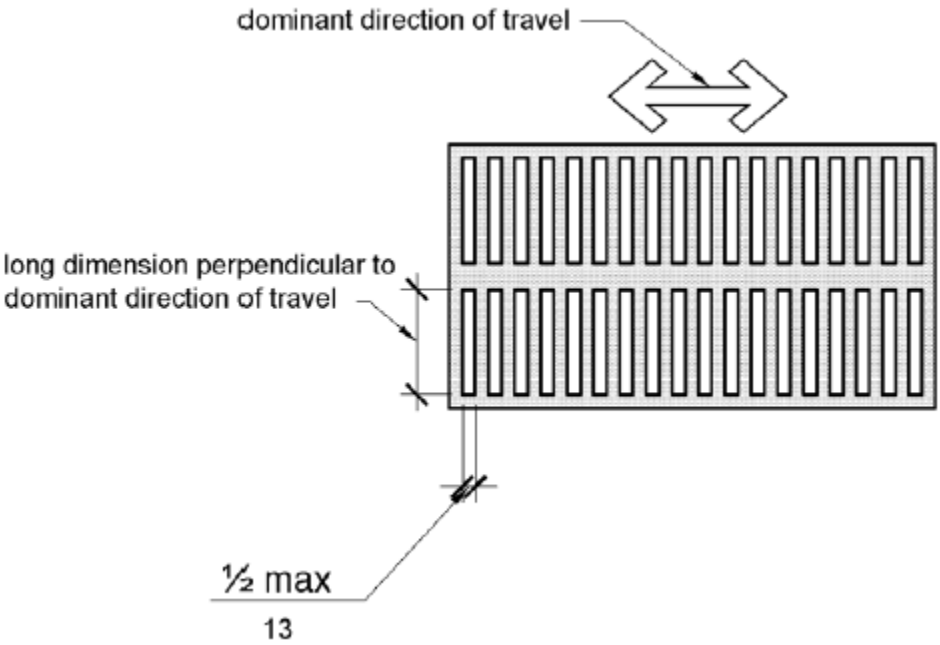

Figure 302.3 Elongated Openings in Floor or Ground Surfaces

303 Changes in Level

303.1 General. Where changes in level are permitted in floor or ground surfaces, they shall comply with 303.

EXCEPTIONS:

1. Animal containment areas shall not be required to comply with 303.

2. ***Areas of sport activity*** shall not be required to comply with 303.

303.2 Vertical. Changes in level of 1/4 inch (6.4 mm) high maximum shall be permitted to be vertical.

Figure 303.2 Vertical Change in Level

303.3 Beveled. Changes in level between 1/4 inch (6.4 mm) high minimum and 1/2 inch (13 mm) high maximum shall be beveled with a slope not steeper than 1:2.

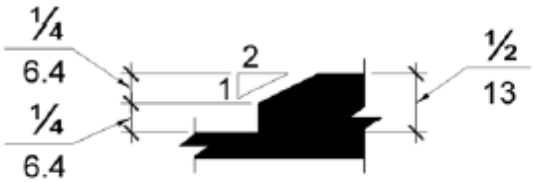

Figure 303.3 Beveled Change in Level

303.4 Ramps. Changes in level greater than 1/2 inch (13 mm) high shall be ***ramped***, and shall comply with 405 or 406.

304 Turning Space

304.1 General. Turning space shall comply with 304.

304.2 Floor or Ground Surfaces. Floor or ground surfaces of a turning space shall comply with 302. Changes in level are not permitted.

EXCEPTION: Slopes not steeper than 1:48 shall be permitted.

304.3 Size. Turning space shall comply with 304.3.1 or 304.3.2.

304.3.1 Circular Space. The turning space shall be a space of 60 inches (1525 mm) diameter minimum. The space shall be permitted to include knee and toe clearance complying with 306.

304.3.2 T-Shaped Space. The turning space shall be a T-shaped space within a 60 inch (1525 mm) square minimum with arms and base 36 inches (915 mm) wide minimum. Each arm of the T shall be clear of obstructions 12 inches (305 mm) minimum in each direction and the base shall be clear of obstructions 24 inches (610 mm) minimum. The space shall be permitted to include knee and toe clearance complying with 306 only at the end of either the base or one arm.

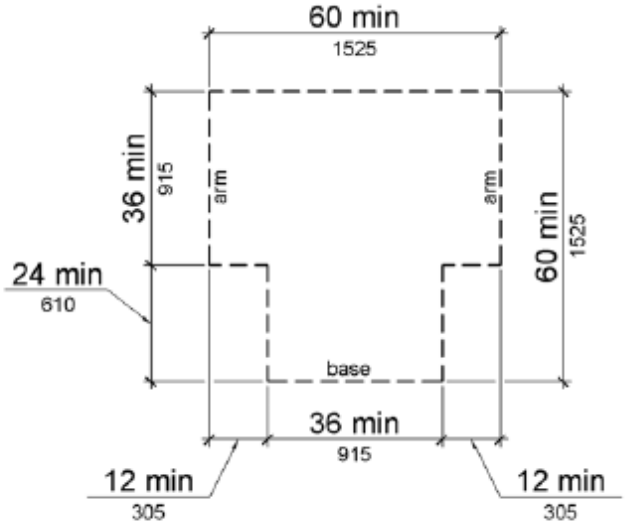

Figure 304.3.2 T-Shaped Turning Space

304.4 Door Swing. Doors shall be permitted to swing into turning spaces.

305 Clear Floor or Ground Space

305.1 General. Clear floor or ground space shall comply with 305.

305.2 Floor or Ground Surfaces. Floor or ground surfaces of a clear floor or ground space shall comply with 302. Changes in level are not permitted.

EXCEPTION: Slopes not steeper than 1:48 shall be permitted.

305.3 Size. The clear floor or ground space shall be 30 inches (760 mm) minimum by 48 inches (1220 mm) minimum.

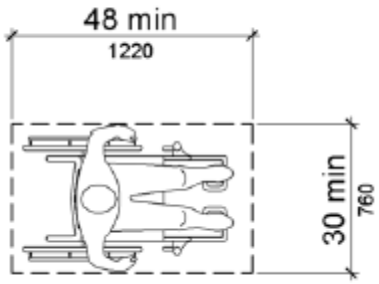

Figure 305.3 Clear Floor or Ground Space

305.4 Knee and Toe Clearance. Unless otherwise specified, clear floor or ground space shall be permitted to include knee and toe clearance complying with 306.

305.5 Position. Unless otherwise specified, clear floor or ground space shall be positioned for either forward or parallel approach to an ***element***.

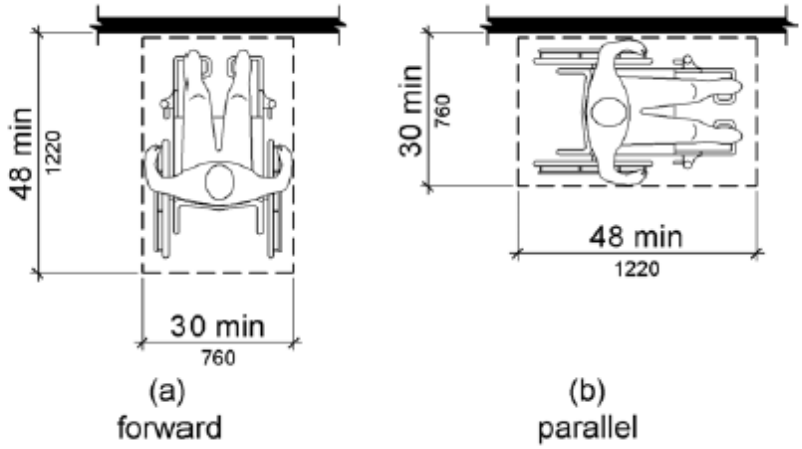

Figure 305.5 Position of Clear Floor or Ground Space

305.6 ***Approach*****.** One full unobstructed side of the clear floor or ground space shall adjoin an ***accessible route*** or adjoin another clear floor or ground space.

305.7 Maneuvering Clearance. Where a clear floor or ground space is located in an alcove or otherwise confined on all or part of three sides, additional maneuvering clearance shall be provided in accordance with 305.7.1 and 305.7.2.

305.7.1 Forward Approach. Alcoves shall be 36 inches (915 mm) wide minimum where the depth exceeds 24 inches (610 mm).

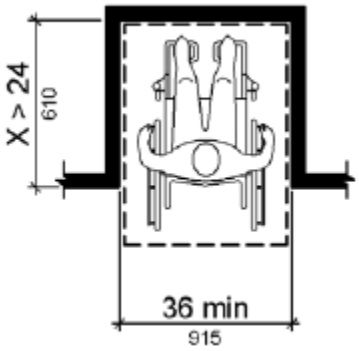

Figure 305.7.1 Maneuvering Clearance in an Alcove, Forward Approach

305.7.2 Parallel Approach. Alcoves shall be 60 inches (1525 mm) wide minimum where the depth exceeds 15 inches (380 mm).

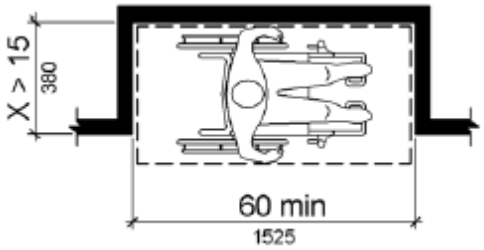

Figure 305.7.2 Maneuvering Clearance in an Alcove, Parallel Approach

306 Knee and Toe Clearance

306.1 General. Where space beneath an ***element*** is included as part of clear floor or ground space or turning space, the space shall comply with 306. Additional space shall not be prohibited beneath an ***element*** but shall not be considered as part of the clear floor or ground space or turning space.

306.2 Toe Clearance.

306.2.1 General. Space under an ***element*** between the finish floor or ground and 9 inches (230 mm) above the finish floor or ground shall be considered toe clearance and shall comply with 306.2.

306.2.2 Maximum Depth. Toe clearance shall extend 25 inches (635 mm) maximum under an ***element***.

306.2.3 Minimum Required Depth. Where toe clearance is required at an ***element*** as part of a clear floor space, the toe clearance shall extend 17 inches (430 mm) minimum under the ***element***.

306.2.4 Additional Clearance. Space extending greater than 6 inches (150 mm) beyond the available knee clearance at 9 inches (230 mm) above the finish floor or ground shall not be considered toe clearance.

306.2.5 Width. Toe clearance shall be 30 inches (760 mm) wide minimum.

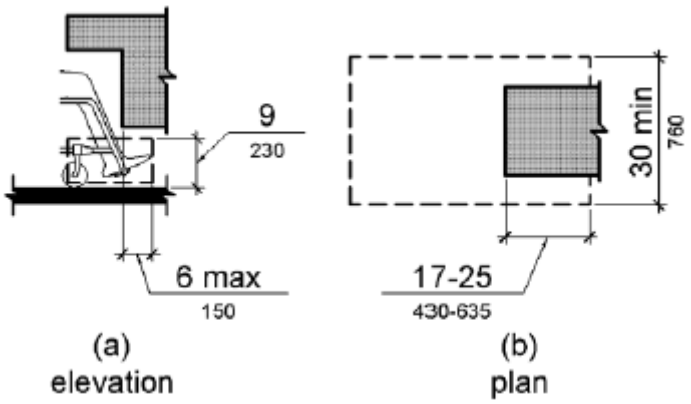

Figure 306.2 Toe Clearance

306.3 Knee Clearance.

306.3.1 General. Space under an ***element*** between 9 inches (230 mm) and 27 inches (685 mm) above the finish floor or ground shall be considered knee clearance and shall comply with 306.3.

306.3.2 Maximum Depth. Knee clearance shall extend 25 inches (635 mm) maximum under an ***element*** at 9 inches (230 mm) above the finish floor or ground.

306.3.3 Minimum Required Depth. Where knee clearance is required under an ***element*** as part of a clear floor space, the knee clearance shall be 11 inches (280 mm) deep minimum at 9 inches (230 mm) above the finish floor or ground, and 8 inches (205 mm) deep minimum at 27 inches (685 mm) above the finish floor or ground.

306.3.4 Clearance Reduction. Between 9 inches (230 mm) and 27 inches (685 mm) above the finish floor or ground, the knee clearance shall be permitted to reduce at a rate of 1 inch (25 mm) in depth for each 6 inches (150 mm) in height.

306.3.5 Width. Knee clearance shall be 30 inches (760 mm) wide minimum.

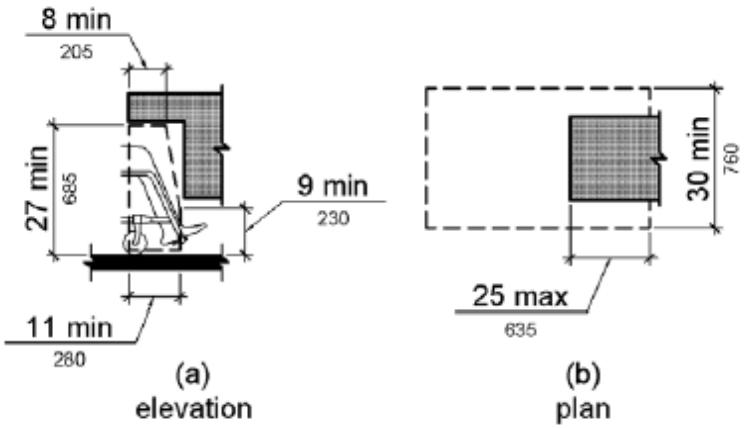

Figure 306.3 Knee Clearance

307 Protruding Objects

307.1 General. Protruding objects shall comply with 307.

307.2 Protrusion Limits. Objects with leading edges more than 27 inches (685 mm) and not more than 80 inches (2030 mm) above the finish floor or ground shall protrude 4 inches (100 mm) maximum horizontally into the ***circulation path***.

EXCEPTION: Handrails shall be permitted to protrude 4 1/2 inches (115 mm) maximum.

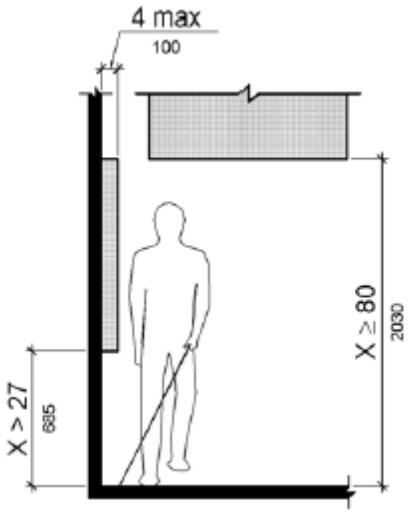

Figure 307.2 Limits of Protruding Objects

307.3 Post-Mounted Objects. Free-standing objects mounted on posts or pylons shall overhang ***circulation paths*** 12 inches (305 mm) maximum when located 27 inches (685 mm) minimum and 80 inches (2030 mm) maximum above the finish floor or ground. Where a sign or other obstruction is mounted between posts or pylons and the clear distance between the posts or pylons is greater than 12 inches (305 mm), the lowest edge of such sign or obstruction shall be 27 inches (685 mm) maximum or 80 inches (2030 mm) minimum above the finish floor or ground.

EXCEPTION: The sloping portions of handrails serving stairs and ***ramps*** shall not be required to comply with 307.3.

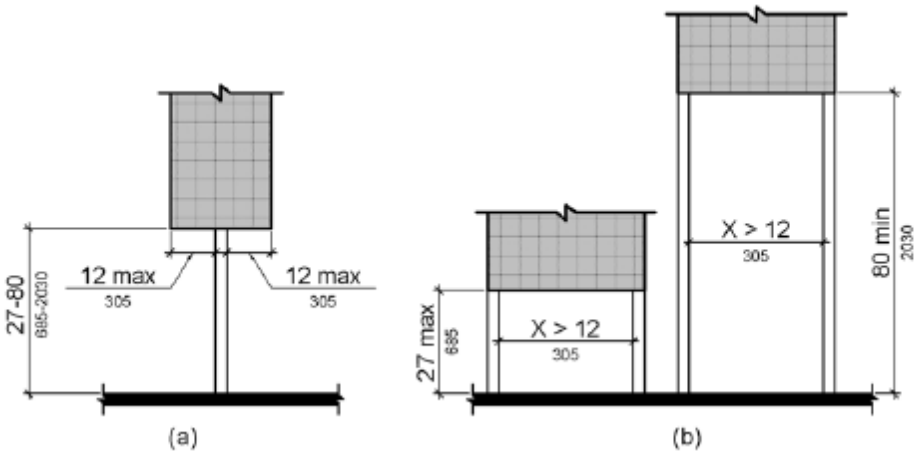

Figure 307.3 Post-Mounted Protruding Objects

307.4 Vertical Clearance. Vertical clearance shall be 80 inches (2030 mm) high minimum. Guardrails or other barriers shall be provided where the vertical clearance is less than 80 inches (2030 mm) high. The leading edge of such guardrail or barrier shall be located 27 inches (685 mm) maximum above the finish floor or ground.

EXCEPTION: Door closers and door stops shall be permitted to be 78 inches (1980 mm) minimum above the finish floor or ground.

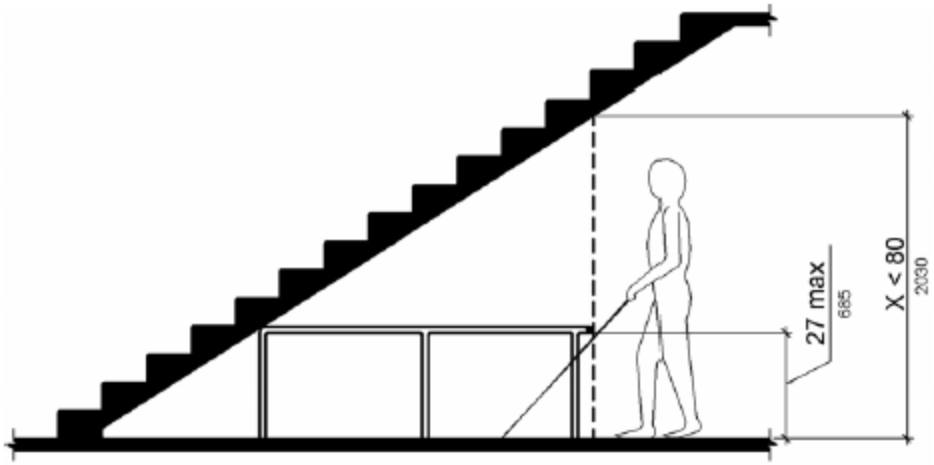

Figure 307.4 Vertical Clearance

307.5 Required Clear Width. Protruding objects shall not reduce the clear width required for ***accessible routes***.

308 Reach Ranges

308.1 General. Reach ranges shall comply with 308.

308.2 Forward Reach.

308.2.1 Unobstructed. Where a forward reach is unobstructed, the high forward reach shall be 48 inches (1220 mm) maximum and the low forward reach shall be 15 inches (380 mm) minimum above the finish floor or ground.

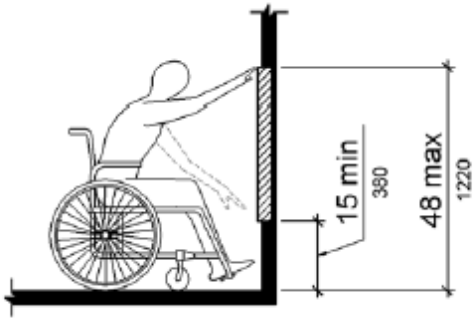

Figure 308.2.1 Unobstructed Forward Reach

308.2.2 Obstructed High Reach. Where a high forward reach is over an obstruction, the clear floor space shall extend beneath the ***element*** for a distance not less than the required reach depth over the obstruction. The high forward reach shall be 48 inches (1220 mm) maximum where the reach depth is 20 inches (510 mm) maximum. Where the reach depth exceeds 20 inches (510 mm), the high forward reach shall be 44 inches (1120 mm) maximum and the reach depth shall be 25 inches (635 mm) maximum.

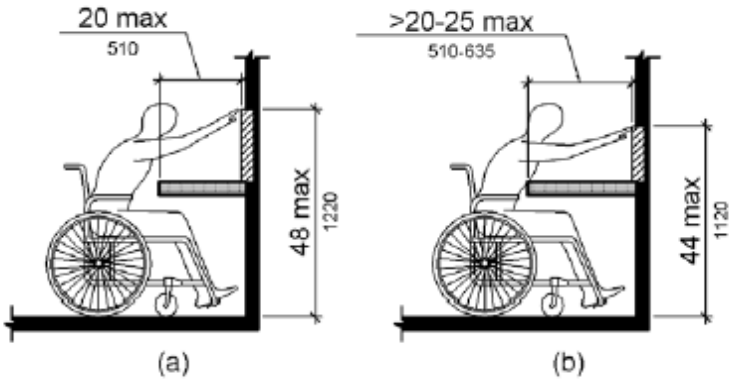

Figure 308.2.2 Obstructed High Forward Reach

308.3 Side Reach.

308.3.1 Unobstructed. Where a clear floor or ground space allows a parallel approach to an ***element*** and the side reach is unobstructed, the high side reach shall be 48 inches (1220 mm) maximum and the low side reach shall be 15 inches (380 mm) minimum above the finish floor or ground.

EXCEPTIONS:

1. An obstruction shall be permitted between the clear floor or ground space and the ***element*** where the depth of the obstruction is 10 inches (255 mm) maximum.

2. ***Operable parts*** of fuel dispensers shall be permitted to be 54 inches (1370 mm) maximum measured from the surface of the ***vehicular way*** where fuel dispensers are installed on existing curbs.

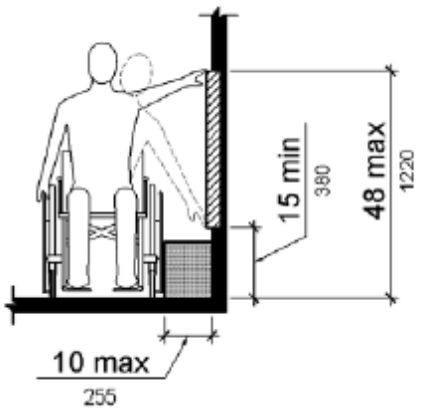

Figure 308.3.1 Unobstructed Side Reach

308.3.2 Obstructed High Reach. Where a clear floor or ground space allows a parallel approach to an ***element*** and the high side reach is over an obstruction, the height of the obstruction shall be 34 inches (865 mm) maximum and the depth of the obstruction shall be 24 inches (610 mm) maximum. The high side reach shall be 48 inches (1220 mm) maximum for a reach depth of 10 inches (255 mm) maximum. Where the reach depth exceeds 10 inches (255 mm), the high side reach shall be 46 inches (1170 mm) maximum for a reach depth of 24 inches (610 mm) maximum.

EXCEPTIONS:

1. The top of washing machines and clothes dryers shall be permitted to be 36 inches (915 mm) maximum above the finish floor.

2. ***Operable parts*** of fuel dispensers shall be permitted to be 54 inches (1370 mm) maximum measured from the surface of the ***vehicular way*** where fuel dispensers are installed on existing curbs.

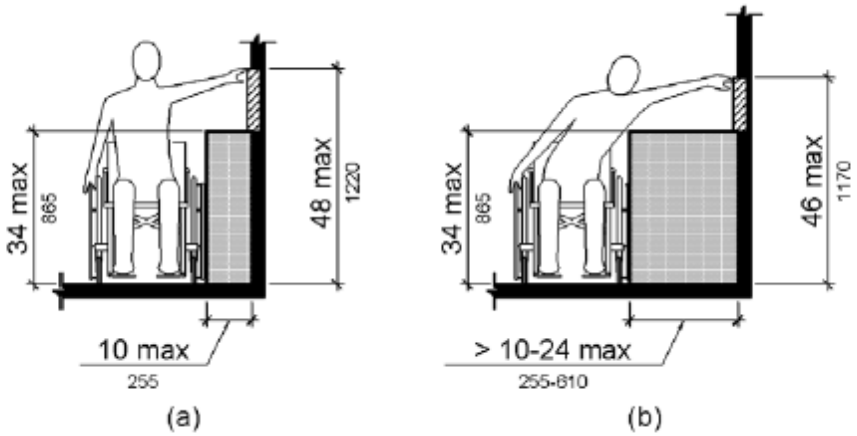

Figure 308.3.2 Obstructed High Side Reach

309 Operable Parts

309.1 General. ***Operable parts*** shall comply with 309.

309.2 Clear Floor Space. A clear floor or ground space complying with 305 shall be provided.

309.3 Height. ***Operable parts*** shall be placed within one or more of the reach ranges specified in 308.

309.4 Operation. ***Operable parts*** shall be operable with one hand and shall not require tight grasping, pinching, or twisting of the wrist. The force required to activate ***operable parts*** shall be 5 pounds (22.2 N) maximum.

EXCEPTION: Gas pump nozzles shall not be required to provide ***operable parts*** that have an activating force of 5 pounds (22.2 N) maximum.

CHAPTER 4: ACCESSIBLE ROUTES

401 General

401.1 Scope. The provisions of Chapter 4 shall apply where required by Chapter 2 or where referenced by a requirement in this document.

402 Accessible Routes

402.1 General. Accessible routes shall comply with 402.

402.2 Components. ***Accessible routes*** shall consist of one or more of the following components: walking surfaces with a ***running slope*** not steeper than 1:20, doorways, ***ramps***, ***curb ramps*** excluding the flared sides, elevators, and platform lifts. All components of an ***accessible route*** shall comply with the applicable requirements of Chapter 4.

403 Walking Surfaces

403.1 General. Walking surfaces that are a part of an ***accessible route*** shall comply with 403.

403.2 Floor or Ground Surface. Floor or ground surfaces shall comply with 302.

403.3 Slope. The ***running slope*** of walking surfaces shall not be steeper than 1:20. The ***cross slope*** of walking surfaces shall not be steeper than 1:48.

403.4 Changes in Level. Changes in level shall comply with 303.

403.5 Clearances. Walking surfaces shall provide clearances complying with 403.5.

EXCEPTION: Within ***employee work areas***, clearances on ***common use circulation paths*** shall be permitted to be decreased by ***work area equipment*** provided that the decrease is essential to the function of the work being performed.

403.5.1 Clear Width. Except as provided in 403.5.2 and 403.5.3, the clear width of walking surfaces shall be 36 inches (915 mm) minimum.

EXCEPTION: The clear width shall be permitted to be reduced to 32 inches (815 mm) minimum for a length of 24 inches (610 mm) maximum provided that reduced width segments are separated by segments that are 48 inches (1220 mm) long minimum and 36 inches (915 mm) wide minimum.

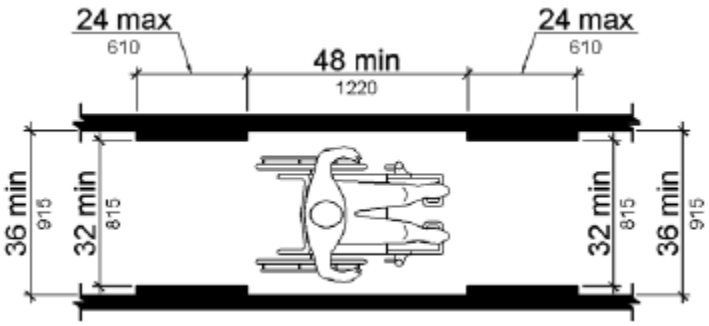

Figure 403.5.1 Clear Width of an Accessible Route

403.5.2 Clear Width at Turn. Where the ***accessible route*** makes a 180 degree turn around an ***element*** which is less than 48 inches (1220 mm) wide, clear width shall be 42 inches (1065 mm) minimum approaching the turn, 48 inches (1220 mm) minimum at the turn and 42 inches (1065 mm) minimum leaving the turn.

EXCEPTION: Where the clear width at the turn is 60 inches (1525 mm) minimum compliance with 403.5.2 shall not be required.

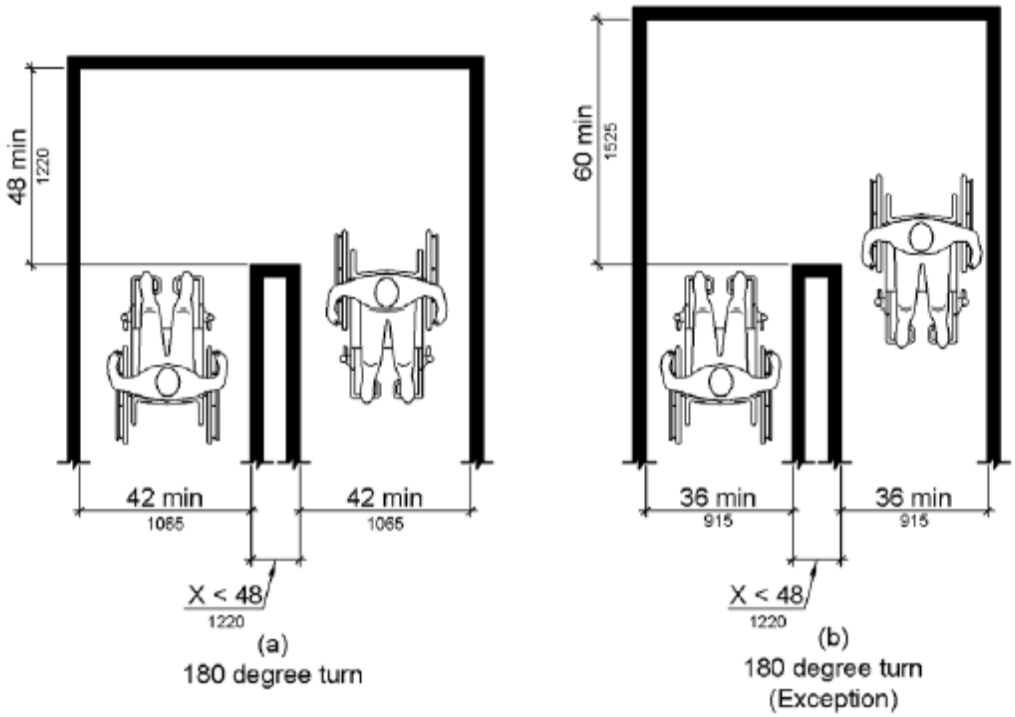

Figure 403.5.2 Clear Width at Turn

403.5.3 Passing Spaces. An accessible route with a clear width less than 60 inches (1525 mm) shall provide passing spaces at intervals of 200 feet (61 m) maximum. Passing spaces shall be either: a space 60 inches (1525 mm) minimum by 60 inches (1525 mm) minimum; or, an intersection of two walking surfaces providing a T-shaped space complying with 304.3.2 where the base and arms of the T-shaped space extend 48 inches (1220 mm) minimum beyond the intersection.

403.5.4 Aisle Width in Libraries. *The clear width of aisles between stacks in libraries shall be 42 inches minimum (1065 mm).*

EXCEPTION. *In existing* ***buildings*** *and* ***alterations****, the minimum width shall be 36 inches (915 mm) minimum.*

403.6 Handrails. Where handrails are provided along walking surfaces with ***running slopes*** not steeper than 1:20 they shall comply with 505.

404 Doors, Doorways, and Gates

404.1 General. Doors, doorways, and gates that are part of an ***accessible route*** shall comply with 404.

EXCEPTION: Doors, doorways, and gates designed to be operated only by security personnel shall not be required to comply with 404.2.7, 404.2.8, 404.2.9, 404.3.2 and 404.3.4 through 404.3.7.

404.2 Manual Doors, Doorways, and Manual Gates. Manual doors and doorways and manual gates intended for user passage shall comply with 404.2.

404.2.1 Revolving Doors, Gates, and Turnstiles. Revolving doors, revolving gates, and turnstiles shall not be part of an ***accessible route***.

404.2.2 Double-Leaf Doors and Gates. At least one of the active leaves of doorways with two leaves shall comply with 404.2.3 and 404.2.4.

404.2.3 Clear Width. Door openings shall provide a clear width of 32 inches (815 mm) minimum. Clear openings of doorways with swinging doors shall be measured between the face of the door and the stop, with the door open 90 degrees. Openings more than 24 inches (610 mm) deep shall provide a clear opening of 36 inches (915 mm) minimum. There shall be no projections into the required clear opening width lower than 34 inches (865 mm) above the finish floor or ground. Projections into the clear opening width between 34 inches (865 mm) and 80 inches (2030 mm) above the finish floor or ground shall not exceed 4 inches (100 mm).

EXCEPTIONS:

1. In ***alterations***, a projection of 5/8 inch (16 mm) maximum into the required clear width shall be permitted for the latch side stop.

2. Door closers and door stops shall be permitted to be 78 inches (1980 mm) minimum above the finish floor or ground.

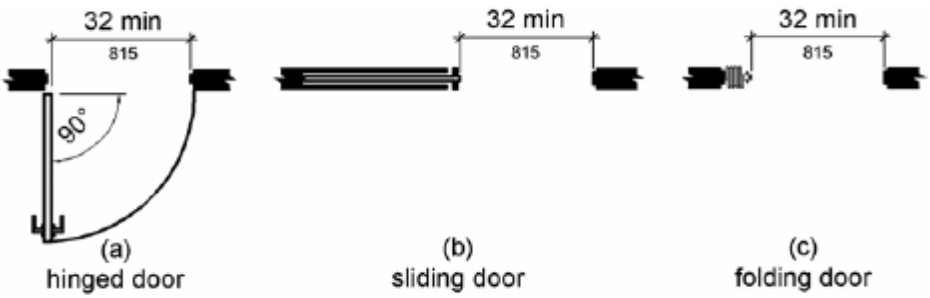

Figure 404.2.3 Clear Width of Doorways

404.2.4 Maneuvering Clearances. Minimum maneuvering clearances at doors and gates shall comply with 404.2.4. Maneuvering clearances shall extend the full width of the doorway and the required latch side or hinge side clearance.

EXCEPTION: Entry doors to hospital patient rooms shall not be required to provide the clearance beyond the latch side of the door.

404.2.4.1 Swinging Doors and Gates. Swinging doors and gates shall have maneuvering clearances complying with Table 404.2.4.1.

Table 404.2.4.1 Maneuvering Clearances at Manual Swinging Doors and Gates

Type of Use		Minimum Maneuvering Clearance	
Approach Direction	**Door or Gate Side**	**Perpendicular to Doorway**	**Parallel to Doorway (beyond latch side unless noted)**
From front	Pull	60 inches (1525 mm)	18 inches (455 mm)
From front	Push	48 inches (1220 mm)	0 inches (0 mm)[1]
From hinge side	Pull	60 inches (1525 mm)	36 inches (915 mm)
From hinge side	Pull	54 inches (1370 mm)	42 inches (1065 mm)
From hinge side	Push	42 inches (1065 mm)[2]	22 inches (560 mm)[3]
From latch side	Pull	48 inches (1220 mm)[4]	24 inches (610 mm)
From latch side	Push	42 inches (1065 mm)[4]	24 inches (610 mm)

Notes:
1. Add 12 inches (305 mm) if closer and latch are provided.
2. Add 6 inches (150 mm) if closer and latch are provided.
3. Beyond hinge side.
4. Add 6 inches (150 mm) if closer is provided.

CAPITAL DEVELOPMENT BOARD

NOTICE OF ADOPTED RULES

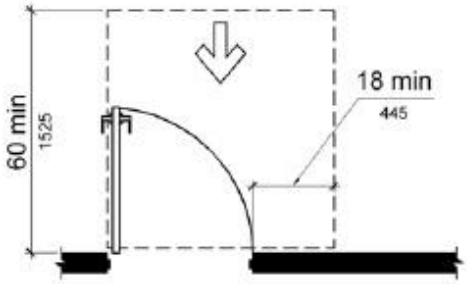

(a)
front approach, pull side

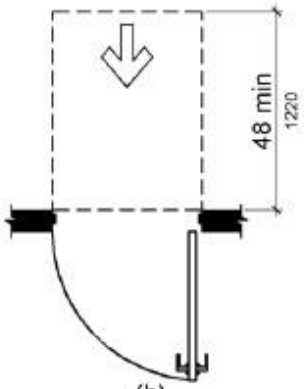

(b)
front approach, push side

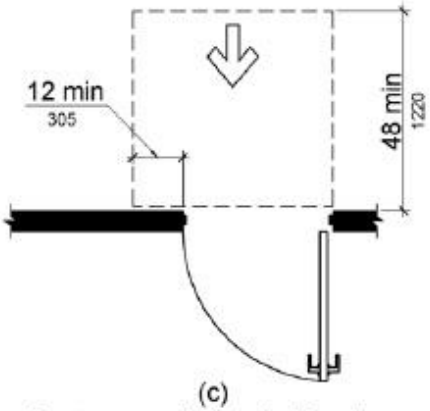

(c)
front approach, push side, door provided with both closer and latch

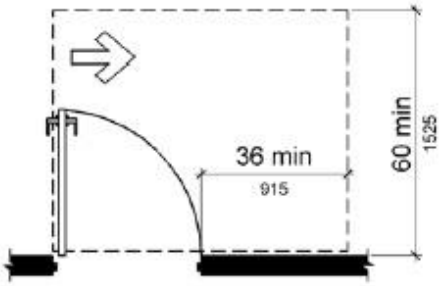

(d)
hinge approach, pull side

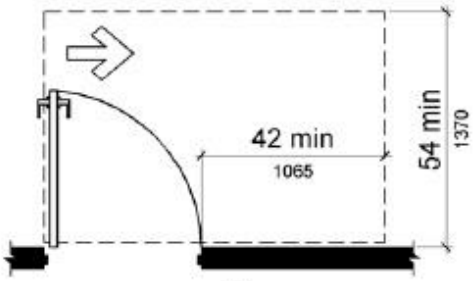

(e)
hinge approach, pull side

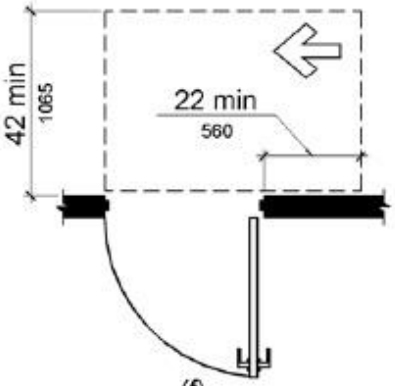

(f)
hinge approach, push side

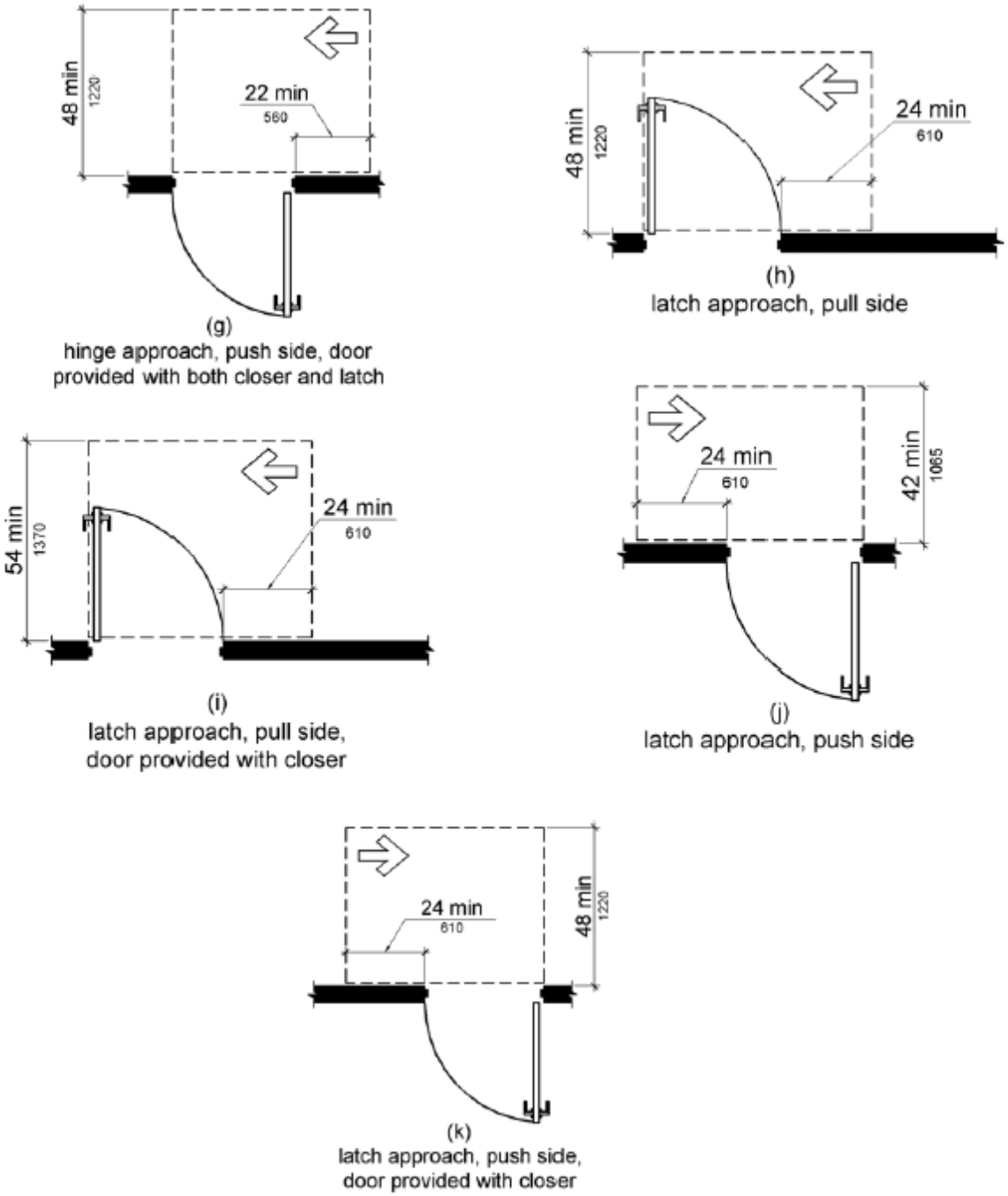

Figure 404.2.4.1 Maneuvering Clearances at Manual Swinging Doors and Gates

404.2.4.2 Doorways without Doors or Gates, Sliding Doors, and Folding Doors. Doorways less than 36 inches (915 mm) wide without doors or gates, sliding doors, or folding doors shall have maneuvering clearances complying with Table 404.2.4.2.

Table 404.2.4.2 Maneuvering Clearances at Doorways without Doors or Gates, Manual Sliding Doors, and Manual Folding Doors

	Minimum Maneuvering Clearance	
Approach Direction	**Perpendicular to Doorway**	**Parallel to Doorway (beyond stop/latch side unless noted)**
From Front	48 inches (1220 mm)	0 inches (0 mm)
From side[1]	42 inches (1065 mm)	0 inches (0 mm)
From pocket/hinge side	42 inches (1065 mm)	22 inches (560 mm)[2]
From stop/latch side	42 inches (1065 mm)	24 inches (610 mm)

Notes:
1. Doorway with no door only.
2. Beyond pocket/hinge side.

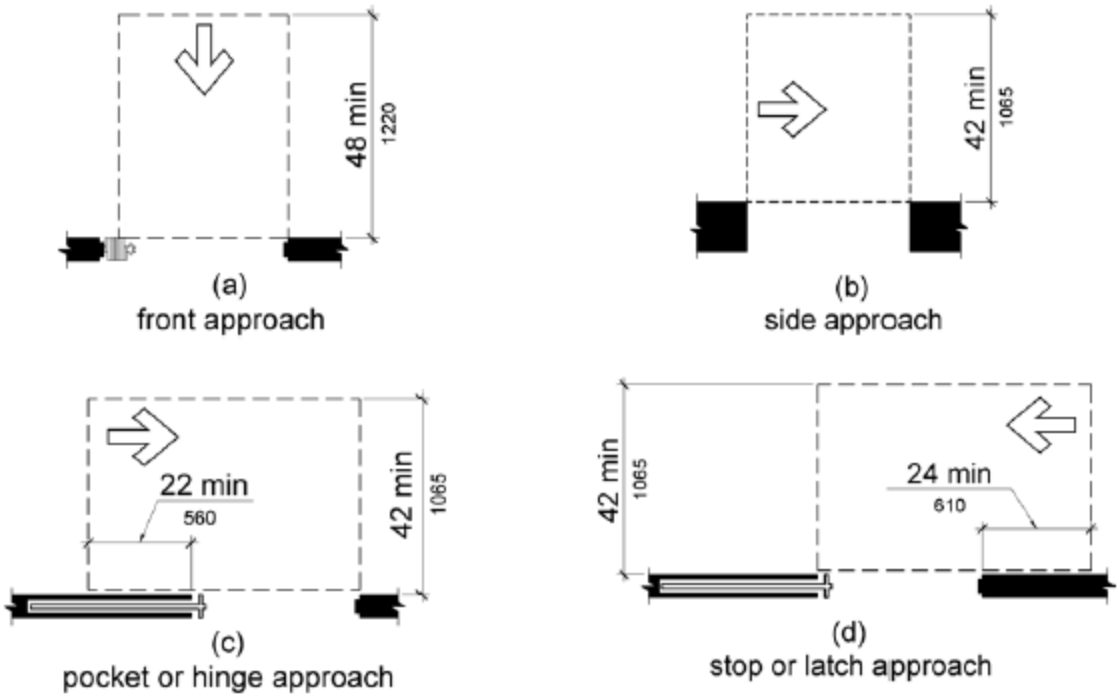

Figure 404.2.4.2 Maneuvering Clearances at Doorways without Doors, Sliding Doors, Gates, and Folding Doors

404.2.4.3 Recessed Doors and Gates. Maneuvering clearances for forward approach shall be provided when any obstruction within 18 inches (455 mm) of the latch side of a doorway projects more than 8 inches (205 mm) beyond the face of the door, measured perpendicular to the face of the door or gate.

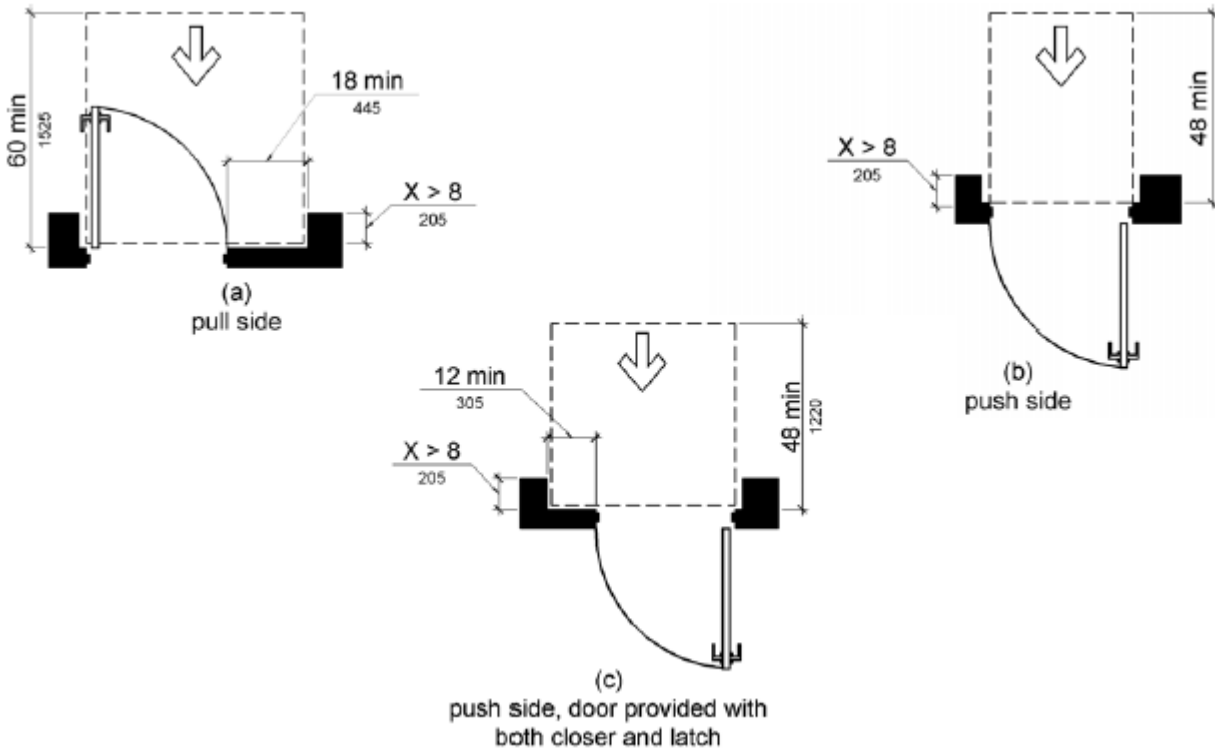

Figure 404.2.4.3 Maneuvering Clearances at Recessed Doors and Gates

404.2.4.4 Floor or Ground Surface. Floor or ground surface within required maneuvering clearances shall comply with 302. Changes in level are not permitted.

EXCEPTIONS:

1. Slopes not steeper than 1:48 shall be permitted.

2. Changes in level at thresholds complying with 404.2.5 shall be permitted.

404.2.5 Thresholds. Thresholds, if provided at doorways, shall be 1/2 inch (13 mm) high maximum. Raised thresholds and changes in level at doorways shall comply with 302 and 303.

EXCEPTION: Existing or altered thresholds 3/4 inch (19 mm) high maximum that have a beveled edge on each side with a slope not steeper than 1:2 shall not be required to comply with 404.2.5.

404.2.6 Doors in Series and Gates in Series. The distance between two hinged or pivoted doors in series and gates in series shall be 48 inches (1220 mm) minimum plus the width of doors or gates swinging into the space.

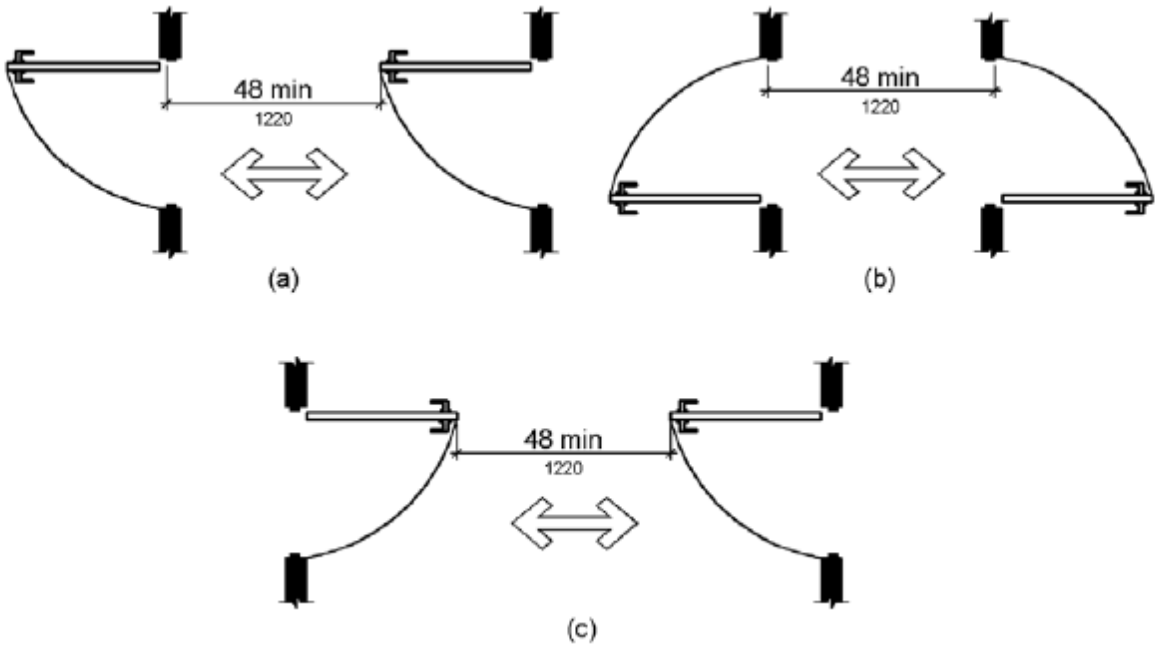

Figure 404.2.6 Doors in Series and Gates in Series

404.2.7 Door and Gate Hardware. Handles, pulls, latches, locks, and other ***operable parts*** on doors and gates shall comply with 309.4. ***Operable parts*** of such hardware shall be 34 inches (865 mm) minimum and 48 inches (1220 mm) maximum above the finish floor or ground. Where sliding doors are in the fully open position, operating hardware shall be exposed and usable from both sides.

EXCEPTIONS:

1. Existing locks shall be permitted in any location at existing glazed doors without stiles, existing overhead rolling doors or grilles, and similar existing doors or grilles that are designed with locks that are activated only at the top or bottom rail.

2. Access gates in barrier walls and fences protecting pools, spas, and hot tubs shall be permitted to have ***operable parts*** of the release of latch on self-latching devices at 54 inches (1370 mm) maximum above the finish floor or ground provided the self-latching devices are not also self-locking devices and operated by means of a key, electronic opener, or integral combination lock.

404.2.8 Closing Speed. Door and gate closing speed shall comply with 404.2.8.

404.2.8.1 Door Closers and Gate Closers. Door closers and gate closers shall be adjusted so that from an open position of 90 degrees, the time required to move the door to a position of 12 degrees from the latch is 5 seconds minimum.

404.2.8.2 Spring Hinges. Door and gate spring hinges shall be adjusted so that from the open position of 70 degrees, the door or gate shall move to the closed position in 1.5 seconds minimum.

404.2.9 Door and Gate Opening Force. Fire doors shall have a minimum opening force allowable by the appropriate ***administrative authority***. The force for pushing or pulling opens a door or gate other than fire doors shall be as follows:

1. Interior hinged doors and gates: 5 pounds (22.2 N) maximum.

2. Sliding or folding doors: 5 pounds (22.2 N) maximum.

3. Exterior hinged doors and gates: 8.5 pounds (37.8N)

These forces do not apply to the force required to retract latch bolts or disengage other devices that hold the door or gate in a closed position.

404.2.10 Door and Gate Surfaces. Swinging door and gate surfaces within 10 inches (255 mm) of the finish floor or ground measured vertically shall have a smooth surface on the push side extending the full width of the door or gate. Parts creating horizontal or vertical joints in these surfaces shall be within 1/16 inch (1.6 mm) of the same plane as the other. Cavities created by added kick plates shall be capped.

EXCEPTIONS:

1. Sliding doors shall not be required to comply with 404.2.10.

2. Tempered glass doors without stiles and having a bottom rail or shoe with the top leading edge tapered at 60 degrees minimum from the horizontal shall not be required to meet the 10 inch (255 mm) bottom smooth surface height requirement.

3. Doors and gates that do not extend to within 10 inches (255 mm) of the finish floor or ground shall not be required to comply with 404.2.10.

4. Existing doors and gates without smooth surfaces within 10 inches (255 mm) of the finish floor or ground shall not be required to provide smooth surfaces complying with 404.2.10 provided that if added kick plates are installed, cavities created by such kick plates are capped

404.2.11 Vision Lights. Doors, gates, and side lights adjacent to doors or gates, containing one or more glazing panels that permit viewing through the panels shall have the bottom of at least one glazed panel located 43 inches (1090 mm) maximum above the finish floor.

EXCEPTION: Vision lights with the lowest part more than 66 inches (1675 mm) from the finish floor or ground shall not be required to comply with 404.2.11.

404.3 Automatic and Power-Assisted Doors and Gates. Automatic doors and automatic gates shall comply with 404.3. Full-powered automatic doors shall comply with ANSI/BHMA A156.10 (incorporated by reference, see "Referenced Standards" in Chapter 1). Low-energy and ***power-assisted doors*** shall comply with ANSI/BHMA A156.19 (2002 edition) (incorporated by reference, see "Referenced Standards" in Chapter 1).

404.3.1 Clear Width. Doorways shall provide a clear opening of 32 inches (815 mm) minimum in power-on and power-off mode. The minimum clear width for automatic door systems in a doorway shall be based on the clear opening provided by all leaves in the open position.

404.3.2 Maneuvering Clearance. Clearances at ***power-assisted doors*** and gates shall comply with 404.2.4. Clearances at automatic doors and gates without standby power and serving an accessible means of egress shall comply with 404.2.4.

EXCEPTION: Where automatic doors and gates remain open in the power-off condition, compliance with 404.2.4 shall not be required.

404.3.3 Thresholds. Thresholds and changes in level at doorways shall comply with 404.2.5.

404.3.4 Doors in Series and Gates in Series. Doors in series and gates in series shall comply with 404.2.6.

404.3.5 Controls. Manually operated controls shall comply with 309. The clear floor space adjacent to the control shall be located beyond the arc of the door swing.

404.3.6 Break Out Opening. Where doors and gates without standby power are a part of a means of egress, the clear break out opening at swinging or sliding doors and gates shall be 32 inches (815 mm) minimum when operated in emergency mode.

EXCEPTION: Where manual swinging doors and gates comply with 404.2 and serve the same means of egress compliance with 404.3.6 shall not be required.

404.3.7 Revolving Doors, Revolving Gates, and Turnstiles. Revolving doors, revolving gates, and turnstiles shall not be part of an ***accessible route***.

405 Ramps

405.1 General. ***Ramps*** on ***accessible routes*** shall comply with 405.

EXCEPTION: In ***assembly areas***, aisle ***ramp*** adjacent to seating and not serving ***elements*** required to be on an ***accessible route*** shall not be required to comply with 405.

405.2 Slope. ***Ramp*** runs shall have a ***running slope*** not steeper than 1:12.

EXCEPTION: In existing ***sites***, ***buildings***, and ***facilities***, ***ramps*** shall be permitted to have ***running slopes*** steeper than 1:12 complying with Table 405.2 where such slopes are necessary due to space limitations.

Table 405.2 Maximum Ramp Slope and Rise for Existing Sites, Buildings, and Facilities

Slope[1]	**Maximum Rise**
Steeper than 1:10 but not steeper than 1:8	3 inches (75 mm)
Steeper than 1:12 but not steeper than 1:10	6 inches (150 mm)

Note:
1. A slope steeper than 1:8 is prohibited.

405.3 Cross Slope. ***Cross slope*** of ***ramp*** runs shall not be steeper than 1:48.

405.4 Floor or Ground Surfaces. Floor or ground surfaces of ***ramp*** runs shall comply with 302. Changes in level other than the ***running slope*** and ***cross slope*** are not permitted on ***ramp*** runs.

405.5 Clear Width. The clear width of a ***ramp*** run and, where handrails are provided, the clear width between handrails shall be 36 inches (915 mm) minimum.

EXCEPTION: Within ***employee work areas***, the required clear width of ***ramps*** that are a part of ***common use circulation paths*** shall be permitted to be decreased by ***work area equipment*** provided that the decrease is essential to the function of the work being performed.

405.6 Rise. The rise for any ***ramp*** run shall be 30 inches (760 mm) maximum.

405.7 Landings. ***Ramps*** shall have landings at the top and the bottom of each ***ramp*** run. Landings shall comply with 405.7.

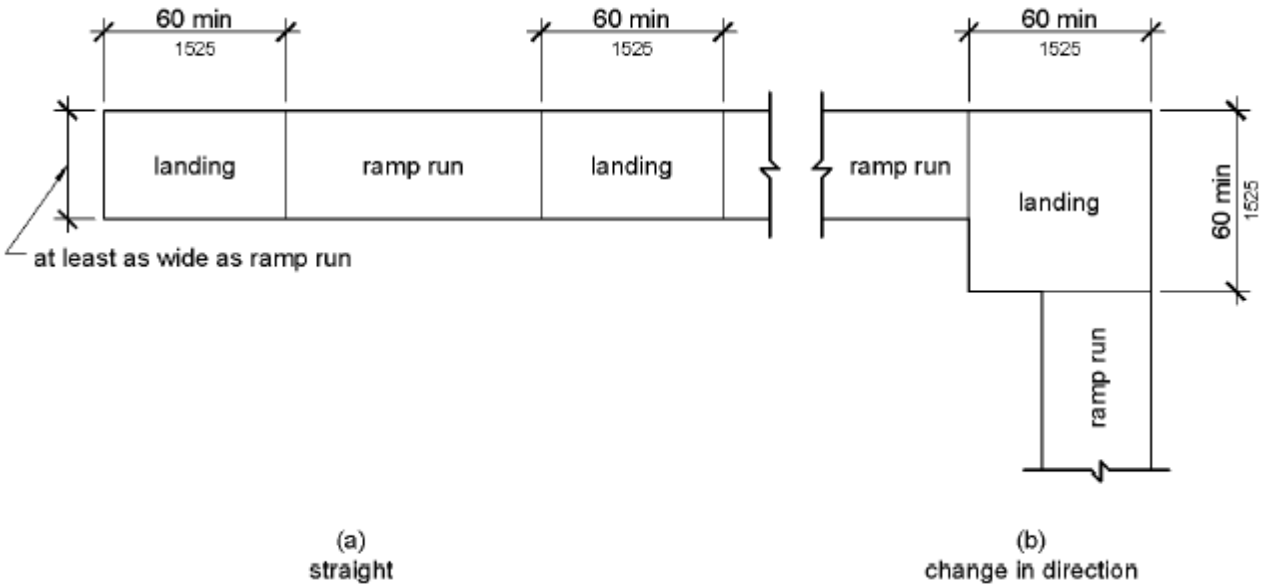

Figure 405.7 Ramp Landings

405.7.1 Slope. Landings shall comply with 302. Changes in level are not permitted.

EXCEPTION: Slopes not steeper than 1:48 shall be permitted.

405.7.2 Width. The landing clear width shall be at least as wide as the widest ***ramp*** run leading to the landing.

405.7.3 Length. The landing clear length shall be 60 inches (1525 mm) long minimum.

405.7.4 Change in Direction. ***Ramps*** that change direction between runs at landings shall have a clear landing 60 inches (1525 mm) minimum by 60 inches (1525 mm) minimum.

405.7.5 Doorways. Where doorways are located adjacent to a ***ramp*** landing, maneuvering clearances required by 404.2.4 and 404.3.2 shall be permitted to overlap the required landing area.

405.8 Handrails. ***Ramp*** runs with a rise greater than 6 inches (150 mm) shall have handrails complying with 505.

EXCEPTION: Within ***employee work areas***, handrails shall not be required where ***ramps*** that are part of ***common use circulation paths*** are designed to permit the installation of handrails complying with 505. ***Ramps*** not subject to the exception to 405.5 shall be designed to maintain a 36 inch (915 mm) minimum clear width when handrails are installed.

405.9 Edge Protection. Edge protection complying with 405.9.1 or 405.9.2 shall be provided on each side of ***ramp*** runs and at each side of ***ramp*** landings.

EXCEPTIONS:

1. Edge protection shall not be required on ***ramps*** that are not required to have handrails and have sides complying with 406.3.

2. Edge protection shall not be required on the sides of ***ramp*** landings serving an adjoining ***ramp*** run or stairway.

3. Edge protection shall not be required on the sides of ***ramp*** landings having a vertical drop-off of 1/2 inch (13 mm) maximum within 10 inches (255 mm) horizontally of the minimum landing area specified in 405.7.

405.9.1 Extended Floor or Ground Surface. The floor or ground surface of the ***ramp*** run or landing shall extend 12 inches (305 mm) minimum beyond the inside face of a handrail complying with 505.

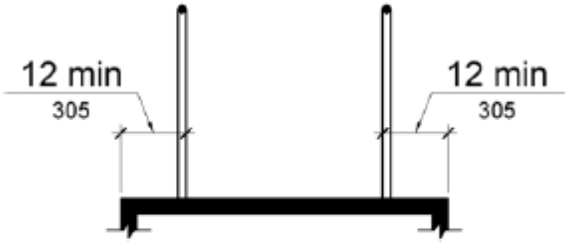

Figure 405.9.1 Extended Floor or Ground Surface Edge Protection

405.9.2 Curb or Barrier. A curb or barrier shall be provided that prevents the passage of a 4 inch (100 mm) diameter sphere, where any portion of the sphere is within 4 inches (100 mm) of the finish floor or ground surface.

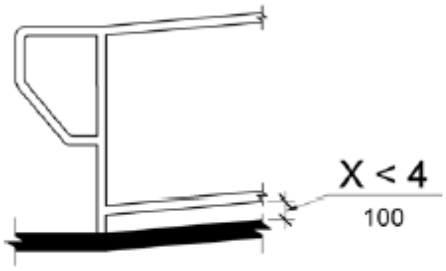

Figure 405.9.2 Curb or Barrier Edge Protection

405.10 Wet Conditions. Landings subject to wet conditions shall be designed to prevent the accumulation of water.

406 Curb Ramps

406.1 General. ***Curb ramps*** on ***accessible routes*** shall comply with 406, 405.2 through 405.5, and 405.10.

406.2 Counter Slope. Counter slopes of adjoining gutters and road surfaces immediately adjacent to the ***curb ramp*** shall not be steeper than 1:20. The adjacent surfaces at transitions at ***curb ramps*** to ***walks***, gutters, and streets shall be at the same level.

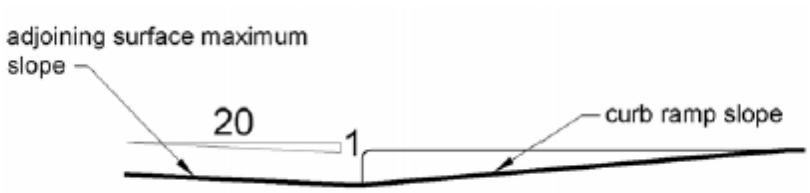

Figure 406.2 Counter Slope of Surfaces Adjacent to Curb Ramps

406.3 Sides of Curb Ramps. Where provided, ***curb ramp*** flares shall not be steeper than 1:10.

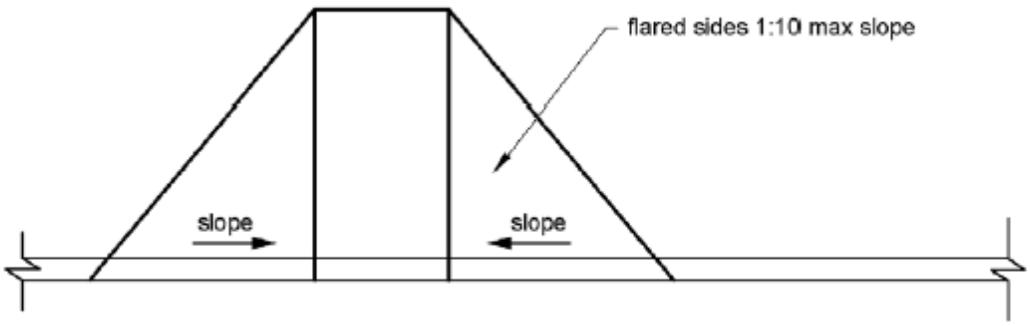

Figure 406.3 Sides of Curb Ramps

406.4 Landings. Landings complying with 405.7.1 shall be provided at the tops of ***curb ramps***. The landing clear length shall be 36 inches (915 mm) minimum. The landing clear width shall be at least as wide as the ***curb ramp***, excluding flared sides, leading to the landing.

EXCEPTION: In ***alterations***, where there is no landing at the top of ***curb ramps***, ***curb ramp*** flares shall be provided and shall not be steeper than 1:12.

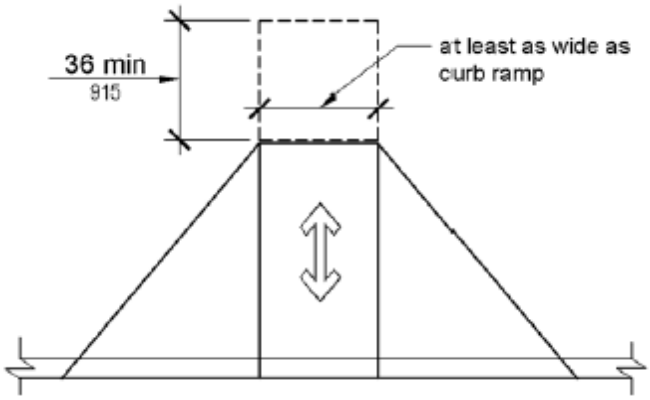

Figure 406.4 Landings at the Top of Curb Ramps

406.5 Location. ***Curb ramps*** and the flared sides of ***curb ramps*** shall be located so that they do not project into vehicular traffic lanes, parking spaces, or parking access aisles. ***Curb ramps*** at ***marked crossings*** shall be wholly contained within the markings, excluding any flared sides.

406.6 Diagonal Curb Ramps. Diagonal or corner type ***curb ramps*** with returned curbs or other well-defined edges shall have the edges parallel to the direction of pedestrian flow. The bottom of diagonal ***curb ramps*** shall have a clear space 48 inches (1220 mm) minimum outside active traffic lanes of the roadway. Diagonal ***curb ramps*** provided at ***marked crossings*** shall provide the 48 inches (1220 mm) minimum clear space within the markings. Diagonal ***curb ramps*** with flared sides shall have a segment of curb 24 inches (610 mm) long minimum located on each side of the ***curb ramp*** and within the ***marked crossing***.

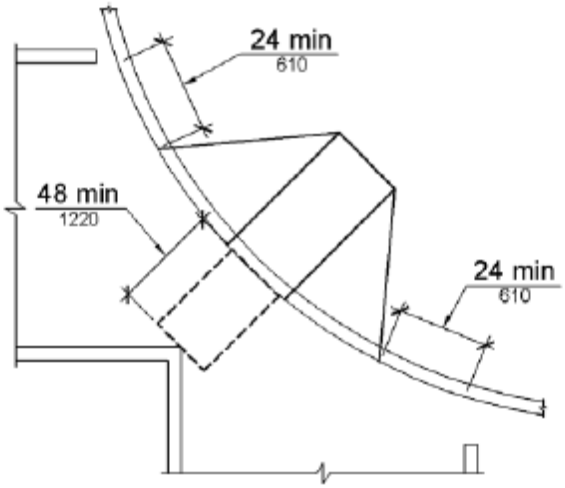

Figure 406.6 Diagonal or Corner Type Curb Ramps

406.7 Islands. Raised islands in crossings shall be cut through level with the street or have ***curb ramps*** at both sides. Each ***curb ramp*** shall have a level area*, with a slope of 1:48 maximum in all directions, that is* 48 inches (1220 mm) long minimum by 36 inches (915 mm) wide minimum at the top of the ***curb ramp*** in the part of the island intersected by the crossings. Each 48 inch (1220 mm) minimum by 36 inch (915 mm) minimum area shall be oriented so that the 48 inch (1220 mm) minimum length is in the direction of the ***running slope*** of the ***curb ramp*** it serves. The 48 inch (1220 mm) minimum by 36 inch (915 mm) minimum areas and the ***accessible route*** shall be permitted to overlap.

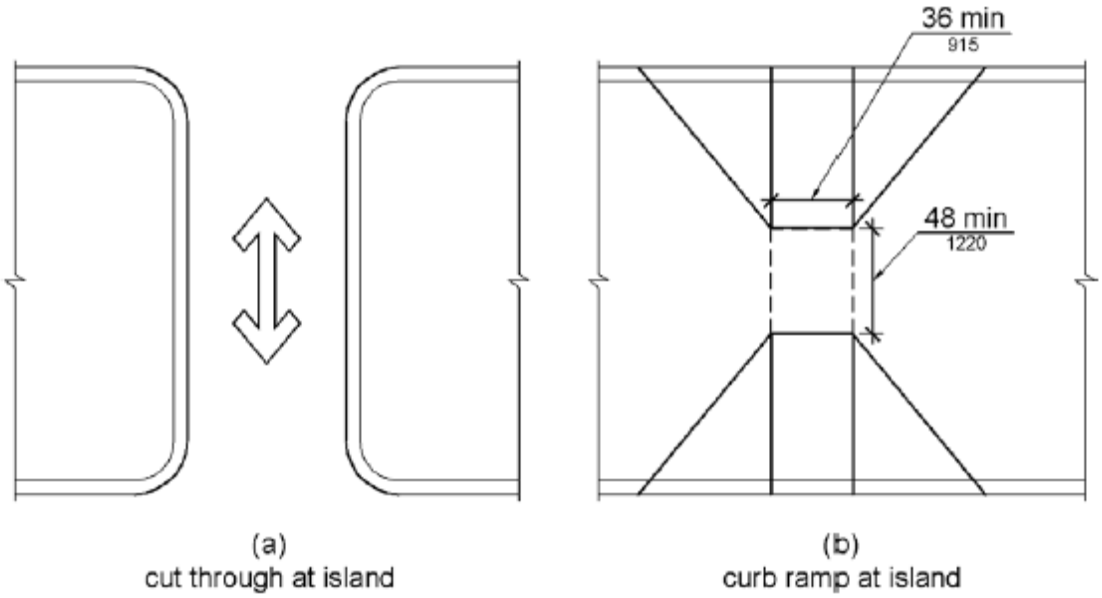

Figure 406.7 Islands in Crossings

407 Elevators

407.1 General. Elevators shall comply with 407 and with ASME A17.1 (incorporated by reference, see "Referenced Standards" in Chapter 1). They shall be passenger elevators as classified by ASME A17.1. Elevator operation shall be automatic.

407.2 Elevator Landing Requirements. Elevator landings shall comply with 407.2.

407.2.1 Call Controls. Where elevator call buttons or keypads are provided, they shall comply with 407.2.1 and 309.4. Call buttons shall be raised or flush.

EXCEPTION: Existing elevators shall be permitted to have recessed call buttons.

407.2.1.1 Height. Call buttons and keypads shall be located within one of the reach ranges specified in 308, measured to the centerline of the highest ***operable part***.

EXCEPTION: Existing call buttons and existing keypads shall be permitted to be located at 54 inches (1370 mm) maximum above the finish floor, measured to the centerline of the highest ***operable part***.

407.2.1.2 Size. Call buttons shall be 3/4 inch (19 mm) minimum in the smallest dimension.

EXCEPTION: Existing elevator call buttons shall not be required to comply with 407.2.1.2.

407.2.1.3 Clear Floor or Ground Space. A clear floor or ground space complying with 305 shall be provided at call controls.

407.2.1.4 Location. The call button that designates the up direction shall be located above the call button that designates the down direction.

EXCEPTION: Destination-oriented elevators shall not be required to comply with 407.2.1.4.

407.2.1.5 Signals. Call buttons shall have visible signals to indicate when each call is registered and when each call is answered.

EXCEPTIONS:

1. Destination-oriented elevators shall not be required to comply with 407.2.1.5 provided that visible and audible signals complying with 407.2.2 indicating which elevator car to enter are provided.

2. Existing elevators shall not be required to comply with 407.2.1.5.

407.2.1.6 Keypads. Where keypads are provided, keypads shall be in a standard telephone keypad arrangement and shall comply with 407.4.7.2.

407.2.2 Hall Signals. Hall signals, including in-car signals, shall comply with 407.2.2.

407.2.2.1 Visible and Audible Signals. A visible and audible signal shall be provided at each hoistway entrance to indicate which car is answering a call and the car's direction of travel. Where in-car signals are provided, they shall be visible from the floor area adjacent to the hall call buttons.

EXCEPTIONS:

1. Visible and audible signals shall not be required at each destination-oriented elevator where a visible and audible signal complying with 407.2.2 is provided indicating the elevator car designation information.

2. In existing elevators, a signal indicating the direction of car travel shall not be required.

407.2.2.2 Visible Signals. Visible signal fixtures shall be centered at 72 inches (1830 mm) minimum above the finish floor or ground. The visible signal elements shall be 2 1/2 inches (64 mm) minimum measured along the vertical centerline of the ***element***. Signals shall be visible from the floor area adjacent to the hall call button.

EXCEPTIONS:

1. Destination-oriented elevators shall be permitted to have signals visible from the floor area adjacent to the hoistway entrance.

2. Existing elevators shall not be required to comply with 407.2.2.2.

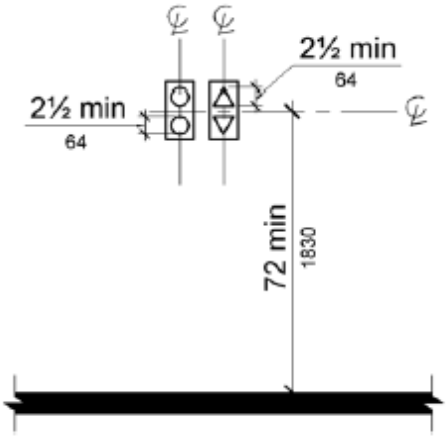

Figure 407.2.2.2 Visible Hall Signals

407.2.2.3 Audible Signals. Audible signals shall sound once for the up direction and twice for the down direction, or shall have verbal annunciators that indicate the direction of elevator car travel. Audible signals shall have a frequency of 1500 Hz maximum. Verbal annunciators shall have a frequency of 300 Hz minimum and 3000 Hz maximum. The audible signal and verbal annunciator shall be 10 dB minimum above ambient, but shall not exceed 80 dB, measured at the hall call button.

EXCEPTIONS:

1. Destination-oriented elevators shall not be required to comply with 407.2.2.3 provided that the audible tone and verbal announcement is the same as those given at the call button or call button keypad.

2. Existing elevators shall not be required to comply with the requirements for frequency and dB range of audible signals.

407.2.2.4 Differentiation. Each destination-oriented elevator in a bank of elevators shall have audible and visible means for differentiation.

407.2.3 Hoistway Signs. Signs at elevator hoistways shall comply with 407.2.3.

407.2.3.1 Floor Designation. Floor designations complying with 703.2 and 703.4.1 shall be provided on both jambs of elevator hoistway entrances. Floor designations shall be provided in both ***tactile characters*** and braille. ***Tactile characters*** shall be 2 inches (51 mm) high minimum. A ***tactile*** star shall be provided on both jambs at the main entry level.

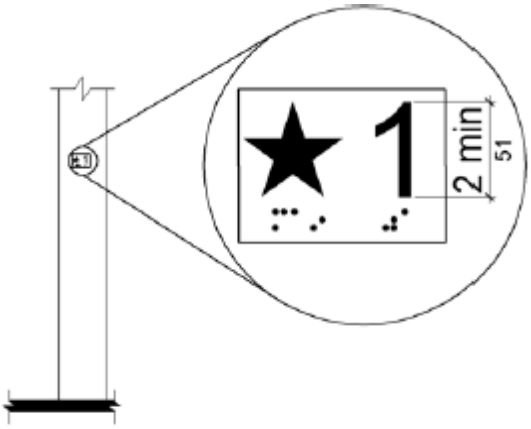

Figure 407.2.3.1 Floor Designations on Jambs of Elevator Hoistway Entrances

407.2.3.2 Car Designations. Destination-oriented elevators shall provide ***tactile*** car identification complying with 703.2 on both jambs of the hoistway immediately below the floor designation. Car designations shall be provided in both ***tactile characters*** and braille. ***Tactile characters*** shall be 2 inches (51 mm) high minimum.

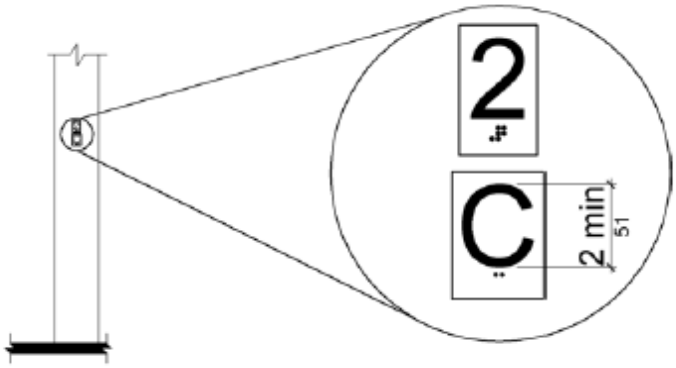

Figure 407.2.3.2 Car Designations on Jambs of Destination-Oriented Elevator Hoistway Entrances

407.3 Elevator Door Requirements. Hoistway and car doors shall comply with 407.3.

407.3.1 Type. Elevator doors shall be the horizontal sliding type. Car gates shall be prohibited.

407.3.2 Operation. Elevator hoistway and car doors shall open and close automatically.

EXCEPTION: Existing manually operated hoistway swing doors shall be permitted provided that they comply with 404.2.3 and 404.2.9. Car door closing shall not be initiated until the hoistway door is closed.

407.3.3 Reopening Device. Elevator doors shall be provided with a reopening device complying with 407.3.3 that shall stop and reopen a car door and hoistway door automatically if the door becomes obstructed by an object or person.

EXCEPTION: Existing elevators with manually operated doors shall not be required to comply with 407.3.3.

407.3.3.1 Height. The device shall be activated by sensing an obstruction passing through the opening at 5 inches (125 mm) nominal and 29 inches (735 mm) nominal above the finish floor.

407.3.3.2 Contact. The device shall not require physical contact to be activated, although contact is permitted to occur before the door reverses.

407.3.3.3 Duration. Door reopening devices shall remain effective for 20 seconds minimum.

407.3.4 Door and Signal Timing. The minimum acceptable time from notification that a car is answering a call or notification of the car assigned at the means for the entry of destination information until the doors of that car start to close shall be calculated from the following equation:

T = D/(1.5 ft/s) or T = D/(455 mm/s) = 5 seconds minimum where T equals the total time in seconds and D equals the distance (in feet or millimeters) from the point in the lobby or corridor 60 inches (1525 mm) directly in front of the farthest call button controlling that car to the centerline of its hoistway door.

EXCEPTIONS:

1. For cars with in-car lanterns, T shall be permitted to begin when the signal is visible from the point 60 inches (1525 mm) directly in front of the farthest hall call button and the audible signal is sounded.

2. Destination-oriented elevators shall not be required to comply with 407.3.4.

407.3.5 Door Delay. Elevator doors shall remain fully open in response to a car call for 3 seconds minimum.

407.3.6 Width. The width of elevator doors shall comply with Table 407.4.1.

EXCEPTION: In existing elevators, a power-operated car door complying with 404.2.3 shall be permitted.

407.4 Elevator Car Requirements. Elevator cars shall comply with 407.4.

407.4.1 Car Dimensions. Inside dimensions of elevator cars and clear width of elevator doors shall comply with Table 407.4.1.

EXCEPTION: Existing elevator car configurations that provide a clear floor area of 16 square feet (1.5 m^2) minimum and also provide an inside clear depth 54 inches (1370 mm) minimum and a clear width 36 inches (915 mm) minimum shall be permitted.

Table 407.4.1 Elevator Car Dimensions

Minimum Dimensions				
Door Location	**Door Clear Width**	**Inside Car, Side to Side**	**Inside Car, Back Wall to Front Return**	**Inside Car, Back Wall to Inside Face of Door**
Centered	42 inches (1065 mm)	80 inches (2030 mm)	51 inches (1295 mm)	54 inches (1370 mm)
Side (off-centered)	36 inches (915 mm)[1]	68 inches (1725 mm)	51 inches (1295 mm)	54 inches (1370 mm)
Any	36 inches (915 mm)[1]	54 inches (1370 mm)	80 inches (2030 mm)	80 inches (2030 mm)
Any	36 inches (915 mm)[1]	60 inches (1525 mm)[2]	60 inches (1525 mm)[2]	60 inches (1525 mm)[2]

Notes:
1. A tolerance of minus 5/8 inch (16 mm) is permitted.
2. Other car configurations that provide a turning space complying with 304 with the door closed shall be permitted.

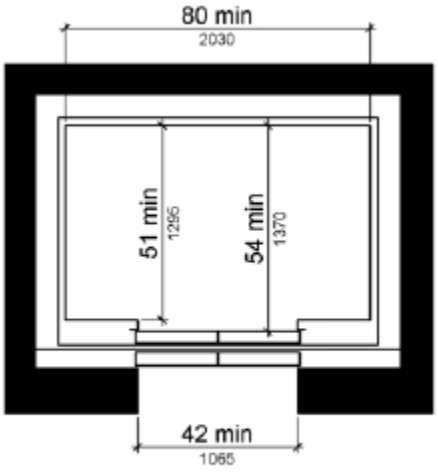

(a)
centered door

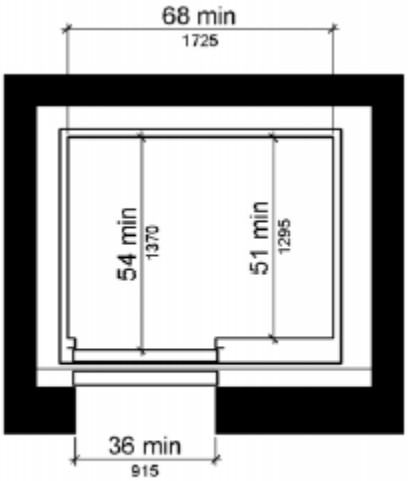

(b)
side (off-centered) door

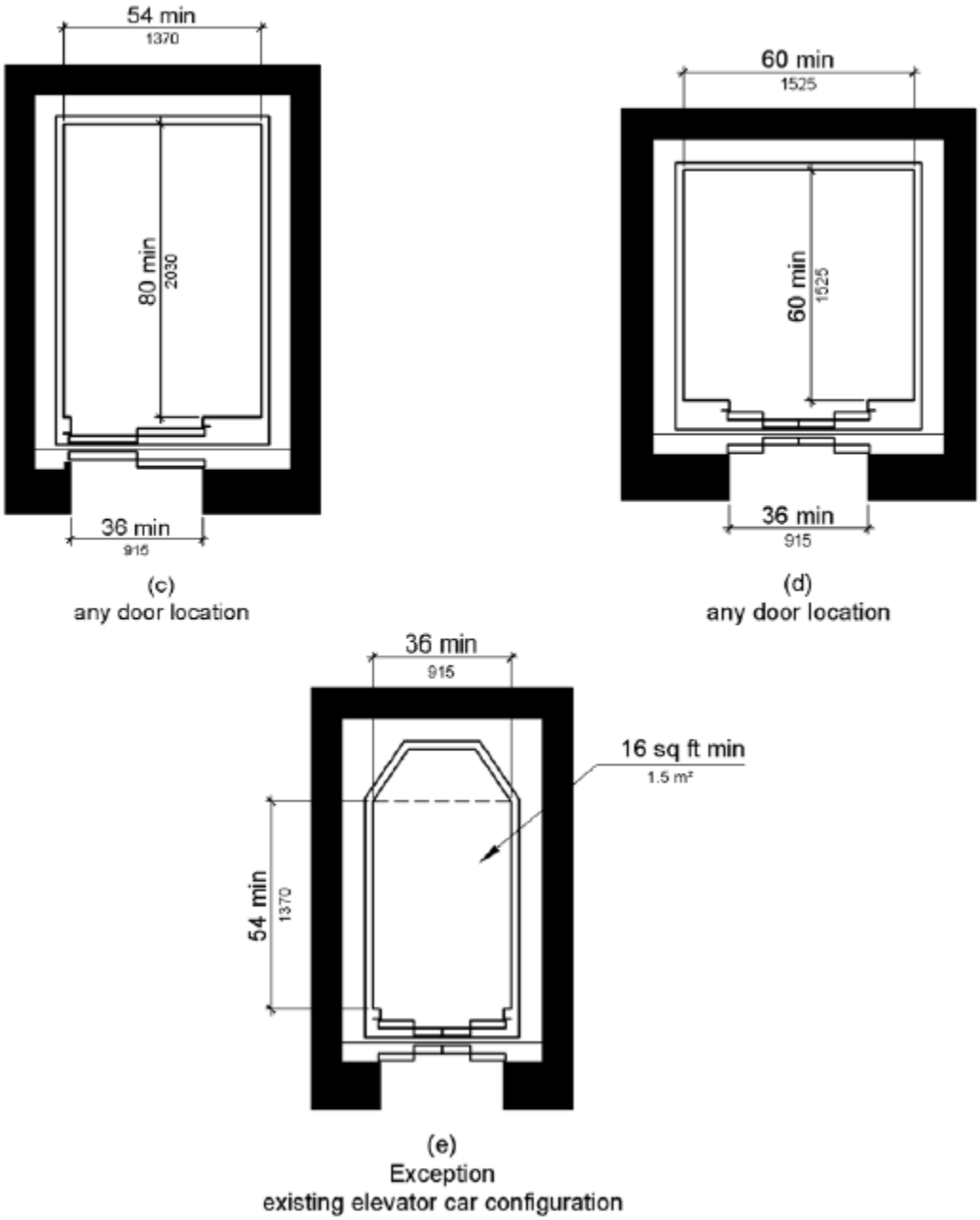

Figure 407.4.1 Elevator Car Dimensions

407.4.2 Floor Surfaces. Floor surfaces in elevator cars shall comply with 302 and 303.

407.4.3 Platform to Hoistway Clearance. The clearance between the car platform sill and the edge of any hoistway landing shall be 1 1/4 inch (32 mm) maximum.

407.4.4 Leveling. Each car shall be equipped with a self-leveling feature that will automatically bring and maintain the car at floor landings within a tolerance of 1/2 inch (13 mm) under rated loading to zero loading conditions.

407.4.5 Illumination. The level of illumination at the car controls, platform, car threshold and car landing sill shall be 5 foot candles (54 lux) minimum.

407.4.6 Elevator Car Controls. Where provided, elevator car controls shall comply with 407.4.6 and 309.4.

EXCEPTION: In existing elevators, where a new car operating panel complying with 407.4.6 is provided, existing car operating panels shall not be required to comply with 407.4.6.

407.4.6.1 Location. Controls shall be located within one of the reach ranges specified in 308.

EXCEPTIONS:

1. Where the elevator panel serves more than 16 openings and a parallel approach is provided, buttons with floor designations shall be permitted to be 54 inches (1370 mm) maximum above the finish floor.

2. In existing elevators, car control buttons with floor designations shall be permitted to be located 54 inches (1370 mm) maximum above the finish floor where a parallel approach is provided.

407.4.6.2 Buttons. Car control buttons with floor designations shall comply with 407.4.6.2 and shall be raised or flush.

EXCEPTION: In existing elevators, buttons shall be permitted to be recessed.

407.4.6.2.1 Size. Buttons shall be 3/4 inch (19 mm) minimum in their smallest dimension.

407.4.6.2.2 Arrangement. Buttons shall be arranged with numbers in ascending order. When two or more columns of buttons are provided they shall read from left to right.

407.4.6.3 Keypads. Car control keypads shall be in a standard telephone keypad arrangement and shall comply with 407.4.7.2.

407.4.6.4 Emergency Controls. Emergency controls shall comply with 407.4.6.4.

407.4.6.4.1 Height. Emergency control buttons shall have their centerlines 35 inches (890 mm) minimum above the finish floor.

407.4.6.4.2 Location. Emergency controls, including the emergency alarm, shall be grouped at the bottom of the panel.

407.4.7 Designations and Indicators of Car Controls. Designations and indicators of car controls shall comply with 407.4.7.

EXCEPTION: In existing elevators, where a new car operating panel complying with 407.4.7 is provided, existing car operating panels shall not be required to comply with 407.4.7.

407.4.7.1 Buttons. Car control buttons shall comply with 407.4.7.1.

407.4.7.1.1 Type. Control buttons shall be identified by ***tactile characters*** complying with 703.2.

407.4.7.1.2 Location. Raised ***character*** and braille designations shall be placed immediately to the left of the control button to which the designations apply.

EXCEPTION: Where space on an existing car operating panel precludes ***tactile*** markings to the left of the controls, markings shall be placed as near to the control as possible.

407.4.7.1.3 Symbols. The control button for the emergency stop, alarm, door open, door close, main entry floor, and phone, shall be identified with ***tactile*** symbols as shown in Table 407.4.7.1.3.

Table 407.4.7.1.3 Elevator Control Button Identification

Control Button	Tactile Symbol	Braille Message
Emergency Stop		"ST"OP Three cells
Alarm		AL"AR"M Four cells

Door Open		OP"EN" Three cells
Door Close		CLOSE Five cells
Main Entry Floor		MA"IN" Three cells
Phone		PH"ONE" Four cells

407.4.7.1.4 Visible Indicators. Buttons with floor designations shall be provided with visible indicators to show that a call has been registered. The visible indication shall extinguish when the car arrives at the designated floor.

407.4.7.2 Keypads. Keypads shall be identified by ***characters*** complying with 703.5 and shall be centered on the corresponding keypad button. The number five key shall have a single raised dot. The dot shall be 0.118 inch (3 mm) to 0.120 inch (3.05 mm) base diameter and in other aspects comply with Table 703.3.1.

407.4.8 Car Position Indicators. Audible and visible car position indicators shall be provided in elevator cars.

407.4.8.1 Visible Indicators. Visible indicators shall comply with 407.4.8.1.

407.4.8.1.1 Size. ***Characters*** shall be 1/2 inch (13 mm) high minimum.

407.4.8.1.2 Location. Indicators shall be located above the car control panel or above the door.

407.4.8.1.3 Floor Arrival. As the car passes a floor and when a car stops at a floor served by the elevator, the corresponding ***character*** shall illuminate.

EXCEPTION: Destination-oriented elevators shall not be required to comply with 407.4.8.1.3 provided that the visible indicators extinguish when the call has been answered.

407.4.8.1.4 Destination Indicator. In destination-oriented elevators, a display shall be provided in the car with visible indicators to show car destinations.

407.4.8.2 Audible Indicators. Audible indicators shall comply with 407.4.8.2.

407.4.8.2.1 Signal Type. The signal shall be an automatic verbal annunciator which announces the floor at which the car is about to stop.

EXCEPTION: For elevators other than destination-oriented elevators that have a rated speed of 200 feet per minute (1 m/s) or less, a non-verbal audible signal with a frequency of 1500 Hz maximum which sounds as the car passes or is about to stop at a floor served by the elevator shall be permitted.

407.4.8.2.2 Signal Level. The verbal annunciator shall be 10 dB minimum above ambient, but shall not exceed 80 dB, measured at the annunciator.

407.4.8.2.3 Frequency. The verbal annunciator shall have a frequency of 300 Hz minimum to 3000 Hz maximum.

407.4.9 Emergency Communication. Emergency two-way communication systems shall comply with 308. ***Tactile*** symbols and ***characters*** shall be provided adjacent to the device and shall comply with 703.2.

408 Limited-Use/Limited-Application Elevators

408.1 General. Limited-use/limited-application elevators shall comply with 408 and with ASME A17.1 (incorporated by reference, see "Referenced Standards" in Chapter 1). They shall be passenger elevators as classified by ASME A17.1. Elevator operation shall be automatic.

408.2 Elevator Landings. Landings serving limited-use/limited-application elevators shall comply with 408.2.

408.2.1 Call Buttons. Elevator call buttons and keypads shall comply with 407.2.1.

408.2.2 Hall Signals. Hall signals shall comply with 407.2.2.

408.2.3 Hoistway Signs. Signs at elevator hoistways shall comply with 407.2.3.1.

408.3 Elevator Doors. Elevator hoistway doors shall comply with 408.3.

408.3.1 Sliding Doors. Sliding hoistway and car doors shall comply with 407.3.1 through 407.3.3 and 408.4.1.

408.3.2 Swinging Doors. Swinging hoistway doors shall open and close automatically and shall comply with 404, 407.3.2 and 408.3.2.

408.3.2.1 Power Operation. Swinging doors shall be power-operated and shall comply with ANSI/BHMA A156.19 (2002 edition) (incorporated by reference, see "Referenced Standards" in Chapter 1).

408.3.2.2 Duration. Power-operated swinging doors shall remain open for 20 seconds minimum when activated.

408.4 Elevator Cars. Elevator cars shall comply with 408.4.

408.4.1 Car Dimensions and Doors. Elevator cars shall provide a clear width 42 inches (1065 mm) minimum and a clear depth 54 inches (1370 mm) minimum. Car doors shall be positioned at the narrow ends of cars and shall provide 32 inches (815 mm) minimum clear width.

EXCEPTIONS:

1. Cars that provide a clear width 51 inches (1295 mm) minimum shall be permitted to provide a clear depth 51 inches (1295 mm) minimum provided that car doors provide a clear opening 36 inches (915 mm) wide minimum.

2. Existing elevator cars shall be permitted to provide a clear width 36 inches (915 mm) minimum, clear depth 54 inches (1370 mm) minimum, and a net clear platform area 15 square feet (1.4 m^2) minimum.

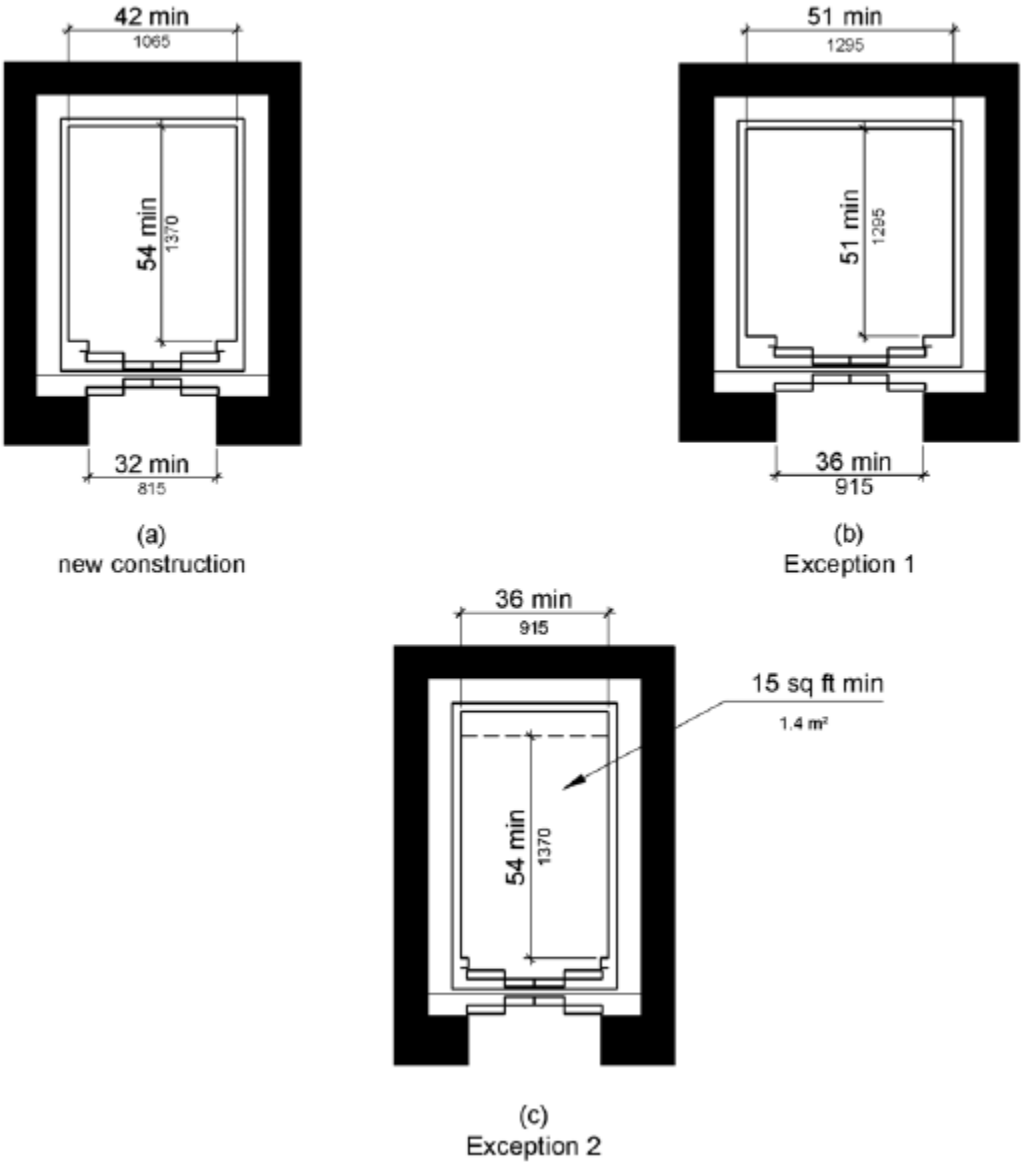

Figure 408.4.1 Limited-Use/Limited-Application (LULA) Elevator Car Dimensions

408.4.2 Floor Surfaces. Floor surfaces in elevator cars shall comply with 302 and 303.

408.4.3 Platform to Hoistway Clearance. The platform to hoistway clearance shall comply with 407.4.3.

408.4.4 Leveling. Elevator car leveling shall comply with 407.4.4.

408.4.5 Illumination. Elevator car illumination shall comply with 407.4.5.

408.4.6 Car Controls. Elevator car controls shall comply with 407.4.6. Control panels shall be centered on a side wall.

408.4.7 Designations and Indicators of Car Controls. Designations and indicators of car controls shall comply with 407.4.7.

408.4.8 Emergency Communications. Car emergency signaling devices complying with 407.4.9 shall be provided.

409 Private Residence Elevators

409.1 General. Private residence elevators that are provided within a ***residential dwelling unit*** required to provide mobility features complying with 809.2 through 809.4 shall comply with 409 and with ASME A17.1 (incorporated by reference, see "Referenced Standards" in Chapter 1). They shall be passenger elevators as classified by ASME A17.1. Elevator operation shall be automatic.

409.2 Call Buttons. Call buttons shall be 3/4 inch (19 mm) minimum in the smallest dimension and shall comply with 309.

409.3 Elevator Doors. Hoistway doors, car doors, and car gates shall comply with 409.3 and 404.

EXCEPTION: Doors shall not be required to comply with the maneuvering clearance requirements in 404.2.4.1 for approaches to the push side of swinging doors.

409.3.1 Power Operation. Elevator car and hoistway doors and gates shall be power operated and shall comply with ANSI/BHMA A156.19 (2002 edition) (incorporated by reference, see "Referenced Standards" in Chapter 1). ***Power operated doors*** and gates shall remain open for 20 seconds minimum when activated.

EXCEPTION: In elevator cars with more than one opening, hoistway doors and gates shall be permitted to be of the manual-open, self-close type.

409.3.2 Location. Elevator car doors or gates shall be positioned at the narrow end of the clear floor spaces required by 409.4.1.

409.4 Elevator Cars. Private residence elevator cars shall comply with 409.4.

409.4.1 Inside Dimensions of Elevator Cars. Elevator cars shall provide a clear floor space of 36 inches (915 mm) minimum by 48 inches (1220 mm) minimum and shall comply with 305.

409.4.2 Floor Surfaces. Floor surfaces in elevator cars shall comply with 302 and 303.

409.4.3 Platform to Hoistway Clearance. The clearance between the car platform and the edge of any landing sill shall be 1 1/2 inch (38 mm) maximum.

409.4.4 Leveling. Each car shall automatically stop at a floor landing within a tolerance of 1/2 inch (13 mm) under rated loading to zero loading conditions.

409.4.5 Illumination Levels. Elevator car illumination shall comply with 407.4.5.

409.4.6 Car Controls. Elevator car control buttons shall comply with 409.4.6, 309.3, 309.4, and shall be raised or flush.

409.4.6.1 Size. Control buttons shall be 3/4 inch (19 mm) minimum in their smallest dimension.

409.4.6.2 Location. Control panels shall be on a side wall, 12 inches (305 mm) minimum from any adjacent wall.

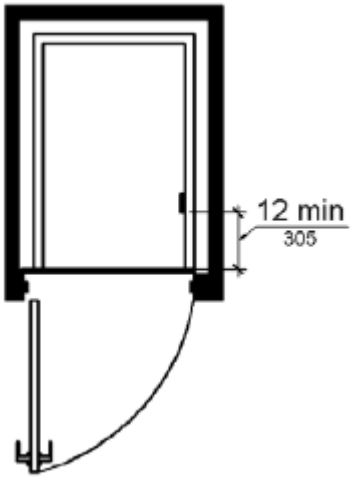

Figure 409.4.6.2 Location of Private Residence Elevator Control Panel

409.4.7 Emergency Communications. Emergency two-way communication systems shall comply with 409.4.7.

409.4.7.1 Type. A telephone and emergency signal device shall be provided in the car.

409.4.7.2 Operable Parts. The telephone and emergency signaling device shall comply with 309.3 and 309.4.

409.4.7.3 Compartment. If the telephone or device is in a closed compartment, the compartment door hardware shall comply with 309.

409.4.7.4 Cord. The telephone cord shall be 29 inches (735 mm) long minimum.

410 Platform Lifts

410.1 General. Platform lifts shall comply with ASME A18.1 (2011 edition) (incorporated by reference, see "Referenced Standards" in Chapter 1). Platform lifts shall not be attendant-operated and shall provide unassisted entry and exit from the lift.

410.2 Floor Surfaces. Floor surfaces in platform lifts shall comply with 302 and 303.

410.3 Clear Floor Space. Clear floor space in platform lifts shall comply with 305.

410.4 Platform to Runway Clearance. The clearance between the platform sill and the edge of any runway landing shall be 1 ¼ inch (32 mm) maximum.

410.5 Operable Parts. Controls for platform lifts shall comply with 309.

410.6 Doors and Gates. Platform lifts shall have low-energy power-operated doors or gates complying with 404.3. Doors shall remain open for 20 seconds minimum. End doors and gates shall provide a clear width 32 inches (815 mm) minimum. Side doors and gates shall provide a clear width 42 inches (1065 mm) minimum.

EXCEPTION: Platform lifts serving two landings maximum and having doors or gates on opposite sides shall be permitted to have self-closing manual doors or gates *complying with 404.2*.

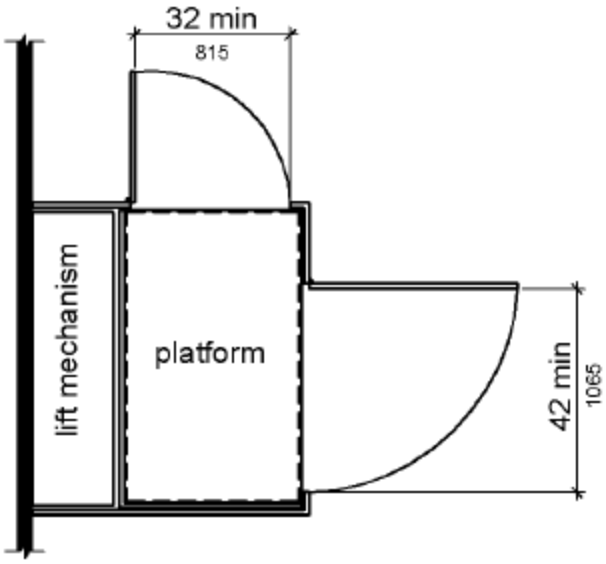

Figure 410.6 Platform Lift Doors and Gates

CHAPTER 5: GENERAL SITE AND BUILDING ELEMENTS

501 General

501.1 Scope. The provisions of Chapter 5 shall apply where required by Chapter 2 or where referenced by a requirement in this document.

502 Parking Spaces

CAPITAL DEVELOPMENT BOARD

NOTICE OF ADOPTED RULES

502.1 General. *Parking spaces shall comply with 502.* Where parking spaces are marked with lines, width measurements of parking spaces and access aisles shall be made from the centerline of the markings.

EXCEPTION: Where parking spaces or access aisles are not adjacent to another parking space or access aisle, measurements shall be permitted to include the full width of the line defining the parking space or access aisle.

502.2 Vehicle Spaces. Vehicle parking spaces shall be *either 8 feet (2440 mm) wide minimum or 11 feet (3350 mm) wide minimum*, shall be marked to define the width, and shall have an adjacent access aisle complying with 502.3.

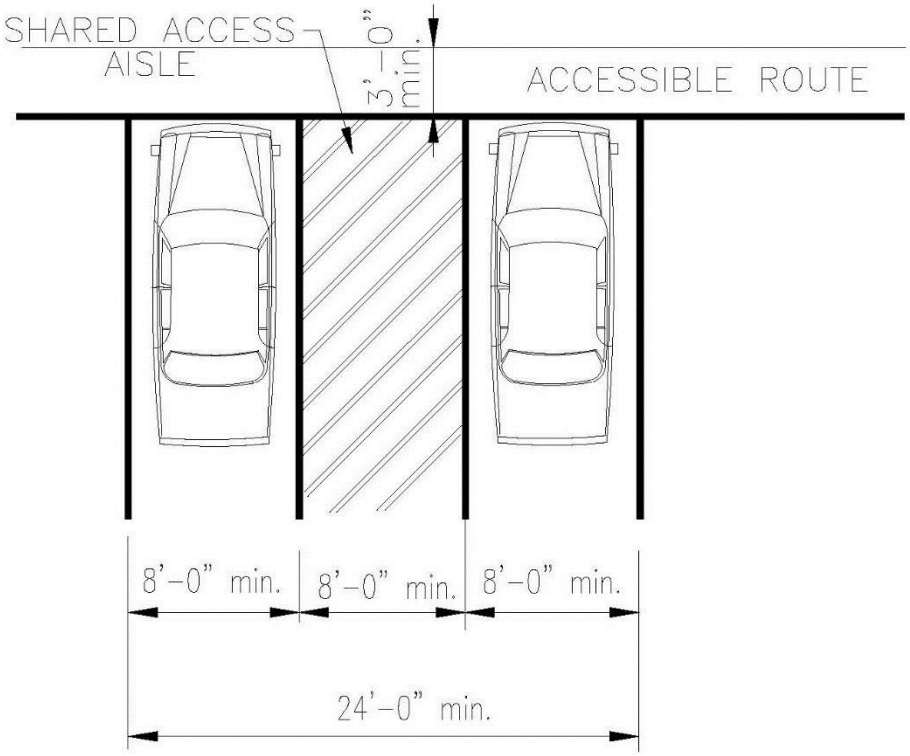

Figure 502.2 Vehicle Parking Spaces

502.3 Access Aisle. Access aisles serving parking spaces shall comply with 502.3. Access aisles shall adjoin an ***accessible route***. *Two parking spaces shall be permitted to share a common access aisle.*

CAPITAL DEVELOPMENT BOARD

NOTICE OF ADOPTED RULES

EXCEPTION: *Diagonal parking spaces shall not share an access aisle. Access aisles serving diagonal accessible parking spaces shall be located on the passenger side of the vehicle space.*

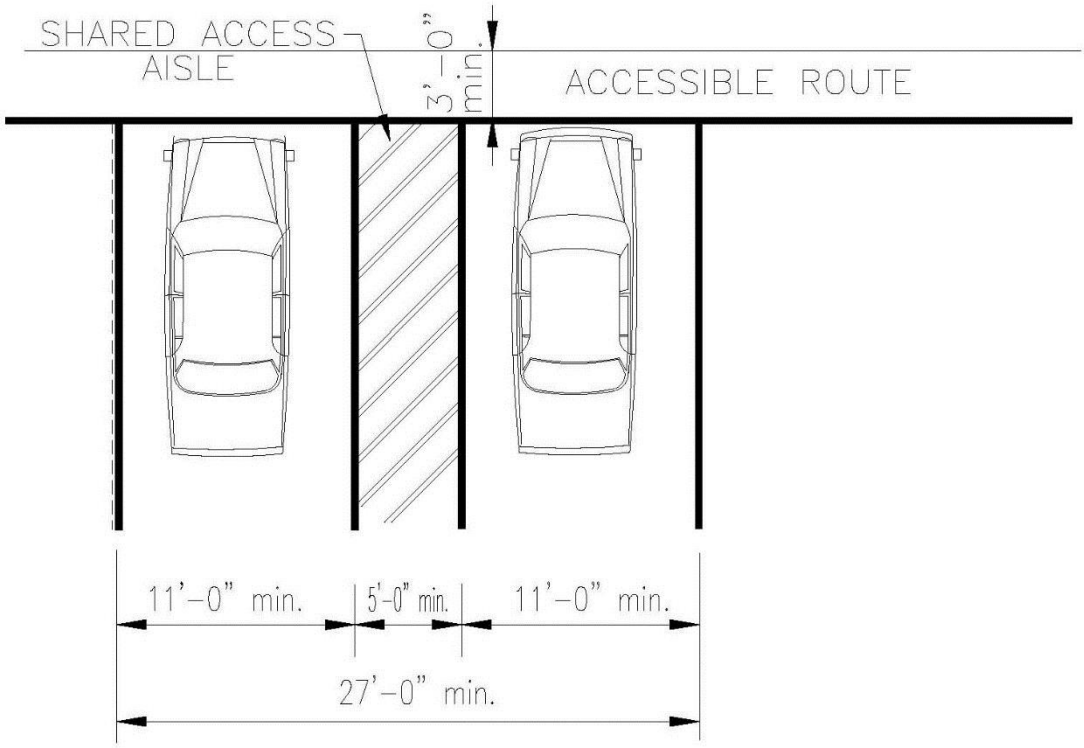

Figure 502.3 (a) Parking Space Access Aisle

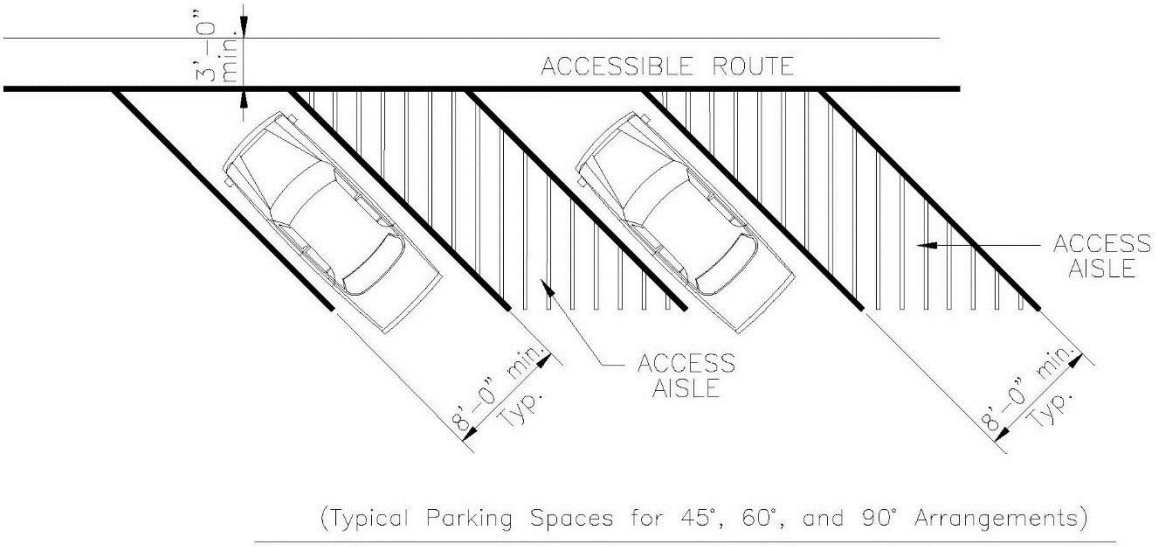

Figure 502.3 (b) Diagonal Parking Space Access Aisle

502.3.1 Width. *The combined width of an accessible parking space and its adjacent access aisle shall be 16 feet (4875 mm) minimum. Access aisles serving parking spaces that are 11 feet (3350 mm) wide minimum shall be 5 feet (1525 mm) wide minimum. Access aisles serving parking spaces that are less than 11 feet (3350 mm) wide shall be 8 feet (2440 mm) wide minimum.*

502.3.2 Length. Access aisles shall extend the full length of the parking spaces they serve.

502.3.3 Marking. Access aisles shall be marked *with diagonal striping* so as to discourage parking in them. *A high quality yellow paint recommended by the paint manufacturer for pavement striping shall be used.*

502.3.4 Location. Access aisles shall not overlap the ***vehicular way***. Access aisles shall be permitted to be placed on either side of the parking space except for angled *parking spaces required by 208.2.4* which shall have access aisles located on the passenger side of the parking spaces *(see Figure 502.3 (b)*.

502.4 Floor or Ground Surfaces. Parking spaces and access aisles serving them shall comply with 302. Access aisles shall be at the same level as the parking spaces they serve. Changes in level are not permitted.

EXCEPTION: Slopes not steeper than 1:48 shall be permitted.

502.5 Vertical Clearance. *Parking spaces required by 208.2.4,* and access aisles and vehicular routes serving them, shall provide a vertical clearance of 98 inches (2490 mm) minimum.

502.6 Identification. *Accessible parking spaces shall be designated as reserved by providing a permanently mounted R7-8 (U.S. Department of Transportation standard; see Figure 502.6 (a)) sign which contains the international symbol of accessibility. Such signs shall exhibit the dollar amount of the fine as required by the Illinois Vehicle Code [625 ILCS 5/1124 and 301.1] or the higher amount if required by local ordinance (see Figure 502.6 (b)). Signs shall be vertically mounted on a post or wall at front center of the parking space, no more than 6 feet (1830 mm) horizontally from the front of the parking space and set a minimum of 5 feet (1525 mm) and a maximum of 9 feet (2745 mm) from finished grade to the bottom of the R7-8 sign.*

Accessible Parking Signs (for parking lots subject to the ***Illinois Vehicle Code***) *shall* comply with the R7-8 sign shown *in Figure 502.6(a)* (U.S. Department of Transportation Standard). Existing signs may remain, but their useful lives shall not be extended by other means than normal maintenance.

CAPITAL DEVELOPMENT BOARD

NOTICE OF ADOPTED RULES

Legend and Border—Pantone 340C
International Symbol of Accessibility—White on Pantone 286
Background
Background—White
Reduce Spacing 80%
Note:
This is a standard sign and may be ordered from any traffic sign supplier by number. The arrow may be

- Omitted if there is only one accessible space.
- Made to point in one direction.
- Replaced by a range of time such as "9 AM-5 PM" where a part-time restriction exists.

The sign must be supplemented with the Illinois Standard R7-I101 plate showing the mound of the fine for illegally parking in the reserved accessible space(s).

Figure 502.6 (a) Parking Fine Sign

ILLINOIS STANDARD
R7-I101P

COLOR	LEGEND AND BORDER	GREEN	REFLECTORIZED
	BACKGROUND	WHITE	REFLECTORIZED

SIGN SIZE	DIMENSIONS				
	A	B	C	D	E
12 X 6	12.00	6.00	1.50	10.00	4.25

SIGN SIZE	SERIES BY LINE	MARGIN	BORDER
	1		
12 X 6	2.5 B	0.375	0.438

All dimensions in inches. Sign not to scale.

Where a fine in excess of $250 is established by an agency in accordance with the statutes, the actual amount of the fine should be shown.

This plate may be mounted directly below the R7-8 sign or combined with that sign on a single 12 inch by 24 inch sign (R7-I101).

Figure 502.6 (b) Parking Sign

502.7 Relationship to Accessible Routes. Parking spaces and access aisles shall be designed so that *vehicles*, when parked, cannot obstruct the required clear width of adjacent ***accessible routes***.

503 Passenger Loading Zones

503.1 General. Passenger loading zones shall comply with 503.

503.2 Vehicle Pull-Up Space. Passenger loading zones shall provide a vehicular pull-up space 96 inches (2440 mm) wide minimum and 20 feet (6100 mm) long minimum.

503.3 Access Aisle. Passenger loading zones shall provide access aisles complying with 503 adjacent to the vehicle pull-up space. Access aisles shall adjoin an ***accessible route*** and shall not overlap the ***vehicular way***.

503.3.1 Width. Access aisles serving vehicle pull-up spaces shall be 60 inches (1525 mm) wide minimum.

503.3.2 Length. Access aisles shall extend the full length of the vehicle pull-up spaces they serve.

503.3.3 Marking. Access aisles shall be marked so as to discourage parking in them.

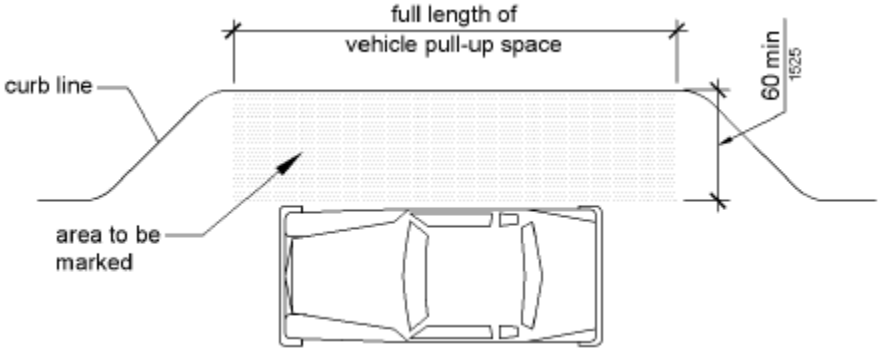

Figure 503.3 Passenger Loading Zone Access Aisle

503.4 Floor and Ground Surfaces. Vehicle pull-up spaces and access aisles serving them shall comply with 302. Access aisles shall be at the same level as the vehicle pull-up space they serve. Changes in level are not permitted.

EXCEPTION: Slopes not steeper than 1:48 shall be permitted.

503.5 Vertical Clearance. Vehicle pull-up spaces, access aisles serving them, and a vehicular route from an ***entrance*** to the passenger loading zone, and from the passenger loading zone to a vehicular exit shall provide a vertical clearance of 114 inches (2895 mm) minimum.

504 Stairways

504.1 General. Stairs shall comply with 504.

504.2 Treads and Risers. All steps on a flight of stairs shall have uniform riser heights and uniform tread depths. Risers shall be 4 inches (100 mm) high minimum and 7 inches (180 mm) high maximum. Treads shall be 11 inches (280 mm) deep minimum.

504.3 Open Risers. Open risers are not permitted.

504.4 Tread Surface. Stair treads shall comply with 302. Changes in level are not permitted.

EXCEPTION: Treads shall be permitted to have a slope not steeper than 1:48.

504.5 Nosings. The radius of curvature at the leading edge of the tread shall be 1/2 inch (13 mm) maximum. Nosings that project beyond risers shall have the underside of the leading edge curved or beveled. Risers shall be permitted to slope under the tread at an angle of 30 degrees maximum from vertical. The permitted projection of the nosing shall extend 1 1/2 inches (38 mm) maximum over the tread below.

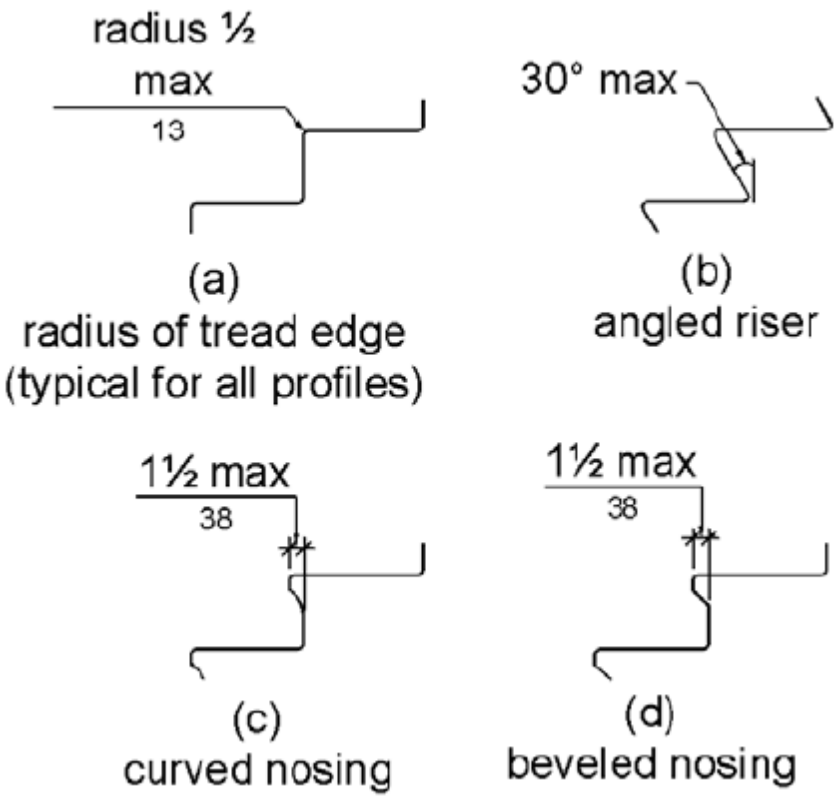

Figure 504.5 Stair Nosings

504.6 Handrails. Stairs shall have handrails complying with 505.

504.7 Wet Conditions. Stair treads and landings subject to wet conditions shall be designed to prevent the accumulation of water.

505 Handrails

505.1 General. Handrails provided along walking surfaces complying with 403, required at ***ramps*** complying with 405, and required at stairs complying with 504 shall comply with 505.

505.2 Where Required. Handrails shall be provided on both sides of stairs and ***ramps***.

EXCEPTION: In ***assembly areas***, handrails shall not be required on both sides of aisle ***ramps*** where a handrail is provided at either side or within the aisle width.

505.3 Continuity. Handrails shall be continuous within the full length of each stair flight or ***ramp*** run. Inside handrails on switchback or dogleg stairs and ***ramps*** shall be continuous between flights or runs.

EXCEPTION: In ***assembly areas***, handrails on ***ramps*** shall not be required to be continuous in aisles serving seating.

505.4 Height. Top of gripping surfaces of handrails shall be 34 inches (865 mm) minimum and 38 inches (965 mm) maximum vertically above walking surfaces, stair nosings, and ***ramp*** surfaces. Handrails shall be at a consistent height above walking surfaces, stair nosings, and ***ramp*** surfaces.

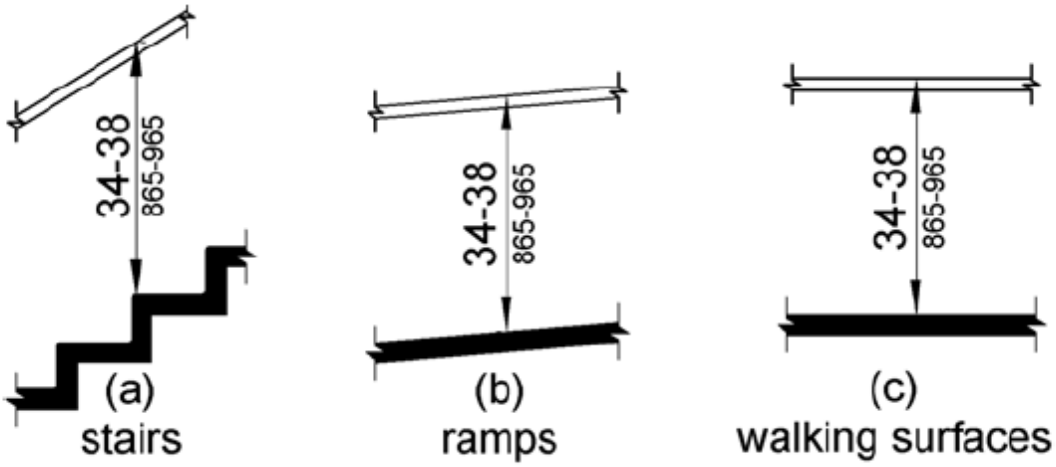

Figure 505.4 Handrail Height

505.5 Clearance. Clearance between handrail gripping surfaces and adjacent surfaces shall be 1 1/2 inches (38 mm) minimum.

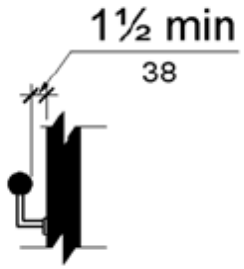

Figure 505.5 Handrail Clearance

505.6 Gripping Surface. Handrail gripping surfaces shall be continuous along their length and shall not be obstructed along their tops or sides. The bottoms of handrail gripping surfaces shall not be obstructed for more than 20 percent of their length. Where provided, horizontal projections shall occur 1 1/2 inches (38 mm) minimum below the bottom of the handrail gripping surface.

EXCEPTIONS:

1. Where handrails are provided along walking surfaces with slopes not steeper than 1:20, the bottoms of handrail gripping surfaces shall be permitted to be obstructed along their entire length where they are integral to crash rails or bumper guards.

2. The distance between horizontal projections and the bottom of the gripping surface shall be permitted to be reduced by 1/8 inch (3.2 mm) for each 1/2 inch (13 mm) of additional handrail perimeter dimension that exceeds 4 inches (100 mm).

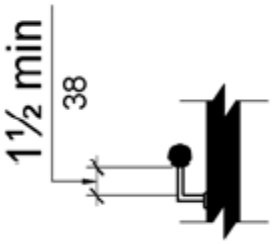

Figure 505.6 Horizontal Projections below Gripping Surface

505.7 Cross Section. Handrail gripping surfaces shall have a cross section complying with 505.7.1 or 505.7.2.

505.7.1 Circular Cross Section. Handrail gripping surfaces with a circular cross section shall have an outside diameter of 1 1/4 inches (32 mm) minimum and 2 inches (51 mm) maximum.

505.7.2 Non-Circular Cross Sections. Handrail gripping surfaces with a non-circular cross section shall have a perimeter dimension of 4 inches (100 mm) minimum and 6 1/4 inches (160 mm) maximum, and a cross-section dimension of 2 1/4 inches (57 mm) maximum.

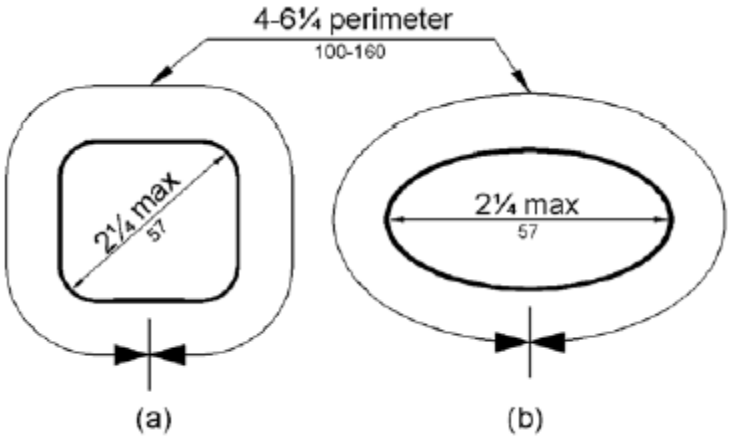

Figure 505.7.2 Handrail Non-Circular Cross Section

505.8 Surfaces. Handrail gripping surfaces and any surfaces adjacent to them shall be free of sharp or abrasive ***elements*** and shall have rounded edges.

505.9 Fittings. Handrails shall not rotate within their fittings.

505.10 Handrail Extensions. Handrail gripping surfaces shall extend beyond and in the same direction of stair flights and ***ramp*** runs in accordance with 505.10.

EXCEPTIONS:

1. Extensions shall not be required for continuous handrails at the inside turn of switchback or dogleg stairs and ***ramps***.

2. In ***assembly areas***, extensions shall not be required for ***ramp*** handrails in aisles serving seating where the handrails are discontinuous to provide access to seating and to permit crossovers within aisles.

3. In ***alterations***, full extensions of handrails shall not be required where such extensions would be hazardous due to plan configuration.

505.10.1 Top and Bottom Extension at Ramps. ***Ramp*** handrails shall extend horizontally above the landing for 12 inches (305 mm) minimum beyond the top and bottom of ***ramp*** runs. Extensions shall return to a wall, guard, or the landing surface, or shall be continuous to the handrail of an adjacent ***ramp*** run.

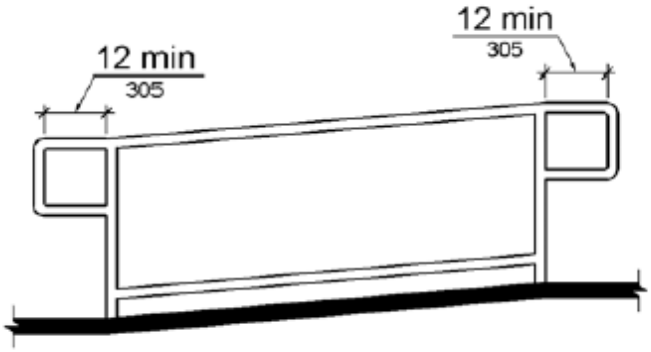

Figure 505.10.1 Top and Bottom Handrail Extension at Ramps

505.10.2 Top Extension at Stairs. At the top of a stair flight, handrails shall extend horizontally above the landing for 12 inches (305 mm) minimum beginning directly above the first riser nosing. Extensions shall return to a wall, guard, or the landing surface, or shall be continuous to the handrail of an adjacent stair flight.

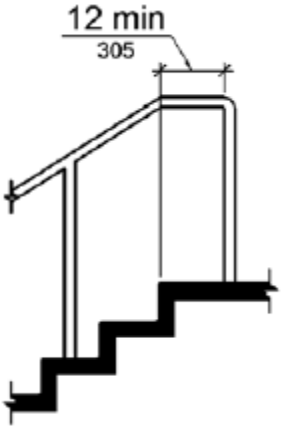

Figure 505.10.2 Top Handrail Extension at Stairs

505.10.3 Bottom Extension at Stairs. At the bottom of a stair flight, handrails shall extend at the slope of the stair flight for a horizontal distance at least equal to one tread depth beyond the last riser nosing. Extension shall return to a wall, guard, or the landing surface, or shall be continuous to the handrail of an adjacent stair flight.

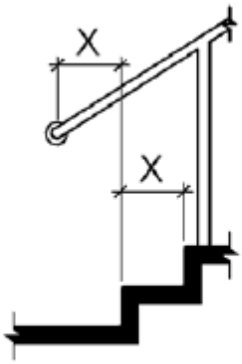

Note: X = tread depth

Figure 505.10.3 Bottom Handrail Extension at Stairs

506 Accessible Means of Egress

506.1 Accessible Means of Egress Required. *Accessible means of egress shall comply with this section. Accessible* ***spaces*** *shall be provided with not less than one accessible means of egress. Where more than one means of egress are required by the* ***applicable building code*** *from any accessible* ***space****, each accessible portion of the* ***space*** *shall be served by not less than two accessible means of egress.*

EXCEPTIONS:

1. *Accessible means of egress are not required to be provided in existing* ***buildings****.*
2. *One accessible means of egress is required from an accessible* ***mezzanine*** *level in accordance with 506.3, 506.4 or 506.5.*
3. *In* ***assembly areas*** *with* ***ramped*** *aisles or stepped aisles, one accessible means of egress is permitted where the common path of egress travel is accessible and meets the requirements of the* ***applicable building code****.*

506.2 Continuity and Components. *Each required accessible means of egress shall be continuous to a* ***public way*** *and shall consist of one or more of the following components:*

1. ***Accessible routes*** *complying with Chapter 4.*
2. *Interior exit stairways complying with 506.3 and the requirements of the* ***applicable building code****.*
3. *Exit access stairways complying with 506.3 and the requirements of the* ***applicable building code****.*
4. *Exterior exit stairways complying with 506.3 and the requirements of the* ***applicable building code*** *and serving levels other than the level of exit discharge.*
5. *Elevators complying with 407 and 506.4.*
6. *Platform lifts complying with 410 and 506.5.*
7. ***Horizontal exits*** *complying with the requirements of the* ***applicable building code****.*
8. ***Ramps*** *complying with 405 and the requirements of the* ***applicable building code****.*
9. ***Areas of refuge*** *complying with 506.6.*
10. *Exterior areas for assisted rescue complying with 506.7 serving exits at the level of exit discharge.*

506.2.1 Elevators Required*. In* ***buildings*** *where a required accessible floor is four or more stories above or below a level of exit discharge, not less than one required accessible means of egress shall be an elevator complying with 506.4.*

EXCEPTIONS:

1. *In* ***buildings*** *equipped throughout with a supervised automatic sprinkler system installed in accordance with the* ***applicable building code****, the elevator shall not be required on floors provided with a* ***horizontal exit*** *and located at or above the levels of exit discharge.*

2. *In* ***buildings*** *equipped throughout with a supervised automatic sprinkler system installed in accordance with the* ***applicable building code****, the elevator shall not be required on floors provided with a* ***ramp*** *complying with 405 and the requirements of the* ***applicable building code****.*

506.3 Stairways*. In order to be considered part of an accessible means of egress, a stairway between stories shall have a clear width of 48 inches (1219 mm) minimum between handrails and shall either incorporate an* ***area of refuge*** *within an enlarged floor-level landing or shall be accessed from an* ***area of refuge*** *complying with 506.6. Exit access stairways that connect levels in the same* ***story*** *are not permitted as part of an accessible means of egress.*

EXCEPTIONS:

1. *Exit access stairways providing means of egress from **mezzanines** are permitted as part of an accessible means of egress.*

2. *The clear width of 48 inches (1219 mm) between handrails is not required in **buildings** equipped throughout with a supervised automatic sprinkler system installed in accordance with the **applicable building code**.*

3. *The clear width of 48 inches (1219 mm) between handrails is not required for stairways accessed from an **area of refuge** in conjunction with a **horizontal exit**.*

4. ***Areas of refuge** are not required at exit access stairways where two-way communication is provided at the elevator landing in accordance with 506.8.*

5. ***Areas of refuge** are not required at stairways in **buildings** equipped throughout with a supervised automatic sprinkler system installed in accordance with the **applicable building code**.*

6. ***Areas of refuge** are not required at stairways serving open parking garages.*

7. ***Areas of refuge** are not required for smoke-protected assembly seating areas complying with the requirements of the **applicable building code**.*

8. ***Areas of refuge** are not required at stairways in residential multi-family occupancies.*

9. ***Areas of refuge** are not required for stairways accessed from a refuge area in conjunction with a **horizontal exit**.*

***506.4 Elevators**. In order to be considered part of an accessible means of egress, an elevator shall comply with the emergency operation and signaling device requirements of Section 2.27 of ASME A17.1/CSA B44. Standby power complying with the requirements of the **applicable building code** shall be provided. The elevator shall be accessed from an **area of refuge** complying with 506.6.*

EXCEPTIONS:

1. ***Areas of refuge** are not required at the elevator in open parking garages.*

2. ***Areas of refuge*** *are not required in* ***buildings*** *and* ***facilities*** *equipped throughout with a supervised automatic sprinkler system installed in accordance with the* ***applicable building code****.*

3. ***Areas of refuge*** *are not required at elevators that are not required by the* ***applicable building code*** *to be located in a shaft.*

4. ***Areas of refuge*** *are not required at elevators serving smoke-protected assembly seating areas complying with the requirements of the* ***applicable building code****.*

5. ***Areas of refuge*** *are not required for elevators accessed from a refuge area in conjunction with a* ***horizontal exit****.*

506.5 Platform Lifts*. Platform lifts complying with 410 shall be permitted to serve as part of an accessible means of egress where allowed as part of a required* ***accessible route*** *in 506.8 except for Item 10. Standby power complying with the requirements of the* ***applicable building code*** *shall be provided for the platform lift.*

506.6 Areas of Refuge*. Every required* ***area of refuge*** *shall be accessible from the* ***space*** *it serves by an accessible means of egress.*

506.6.1 Travel Distance. *The maximum travel distance from any accessible* ***space*** *to an* ***area of refuge*** *shall not exceed the exit access travel distance permitted by the* ***applicable building code*** *for the occupancy.*

506.6.2 Stairway or Elevator Access. *Every required* ***area of refuge*** *shall have direct access to a stairway complying with 506.3 or an elevator complying with 506.4.*

506.6.3 Size*. Each* ***area of refuge*** *shall be sized to accommodate one* ***wheelchair space*** *of 30 inches by 48 inches (762 mm by 1219 mm) for each 200 occupants or portion thereof, based on the* ***occupant load*** *of the* ***area of refuge*** *and areas served by the* ***area of refuge****. Such* ***wheelchair spaces*** *shall not reduce the means of egress minimum width or required capacity. Access to any of the required* ***wheelchair spaces*** *in an* ***area of refuge*** *shall not be obstructed by more than one adjoining* ***wheelchair space****.*

506.6.4 Separation*. Each* ***area of refuge*** *shall be separated from the remainder of the* ***story*** *by a smoke barrier or a* ***horizontal exit*** *complying with the requirements of the* ***applicable building code****. Each* ***area of refuge*** *shall be designed to minimize the intrusion of smoke.*

EXCEPTIONS:

1. ***Areas of refuge*** *located within an enclosure for interior exit stairways complying with the requirements of the* ***applicable building code****.*

2. ***Areas of refuge*** *in outdoor* ***facilities*** *where exit access is essentially open to the outside.*

506.6.5 Two-way Communication*.* ***Areas of refuge*** *shall be provided with a two-way communication system complying with 506.8.1 and 506.8.2.*

506.7 Exterior Areas for Assisted Rescue. *Exterior areas for assisted rescue shall be accessed by an* ***accessible route*** *from the area served.*

Where the exit discharge does not include an ***accessible route*** *from an exit located on the level of exit discharge to a* ***public way****, an exterior area of assisted rescue shall be provided on the exterior landing in accordance with 506.7.1 through 506.7.4.*

506.7.1 Size*. Each exterior area for assisted rescue shall be sized to accommodate* ***wheelchair spaces*** *in accordance with 506.6.3.*

506.7.2 Separation*. Exterior walls separating the exterior area of assisted rescue from the interior of the* ***building*** *shall have a minimum fire-resistance rating of 1 hour, rated for exposure to fire from the inside. The fire-resistance-rated exterior wall construction shall extend horizontally 10 feet (3050 mm) beyond the landing on either side of the landing or equivalent fire-resistance-rated construction is permitted to extend out perpendicular to the exterior wall 4 feet (1220 mm) minimum on the side of the landing. The fire-resistance-rated construction shall extend vertically from the ground to a point 10 feet (3050 mm) above the floor level of the area for assisted rescue or to the roof line, whichever is lower. Openings within such fire-resistance-rated exterior walls shall be protected in accordance with the requirements of the* ***applicable building code****.*

506.7.3 Openness. *The exterior area for assisted rescue shall be open to the outside air. The sides other than the separation walls shall be not less than 50 percent open, and the open area shall be distributed so as to minimize the accumulation of smoke or toxic gases.*

506.7.4 Stairways. *Stairways that are part of the means of egress for the exterior area for assisted rescue shall provide a clear width of 48 inches (1220 mm) between handrails.*

EXCEPTION. *The clear width of 48 inches (1220 mm) between handrails is not required at stairways serving* ***buildings*** *equipped throughout with a supervised automatic sprinkler system installed in accordance with the* ***applicable building code****.*

506.8 Two-Way Communication. *A two-way communication system complying with 506.8.1 and 506.8.2 shall be provided at the landing serving each elevator or bank of elevators on each accessible floor that is one or more stories above or below the level of exit discharge.*

EXCEPTIONS:

1. Two-way communication systems are not required at the landing serving each elevator or bank of elevators where the two-way communication system is provided within ***areas of refuge*** *in accordance with 506.6.5.*

2. Two-way communication systems are not required on floors provided with ***ramps*** *complying with 405 and the requirements of the* ***applicable building code****.*

3. Two-way communication systems are not required at the landings serving only service elevators that are not designated as part of the accessible means of egress or serve as part of the required ***accessible route*** *into a* ***facility****.*

4. Two-way communication systems are not required at the landings serving only freight elevators.

5. Two-way communication systems are not required at the landing serving a private residence elevator.

506.8.1 System Requirements. *Two-way communication systems shall provide communication between each required location and the fire command center or a central control point location approved by the fire department. Where the central control point is not a constantly attended location, a two-way communication system shall have a timed automatic telephone dial-out capability to a monitoring location or 9-1-1. The two-way communication system shall include both audible and visible signals. If a handset is provided, the handset cords shall be 29 inches (735 mm) long minimum.*

506.8.2 Directions. *Directions for the use of the two-way communication system, instructions for summoning assistance via the two-way communication system and written identification of the location shall be posted adjacent to the two-way communication system. Signage shall comply with 703.5 for visual* ***characters****.*

506.9 Signage. *Signage indicating special accessibility provisions shall be provided as shown:*

1. Each door providing access to an ***area of refuge*** *from an adjacent floor area shall be identified by a sign stating: AREA OF REFUGE.*

2. Each door providing access to an exterior area for assisted rescue shall be identified by a sign stating: EXTERIOR AREA FOR ASSISTED RESCUE.

Signage shall comply with 703.5 for visual ***characters*** *and include the International Symbol of Accessibility. Where exit sign illumination is required by the* ***applicable building code****, the signs shall be illuminated. Additionally, visual* ***characters****, raised* ***characters*** *and braille signage complying with 703 shall be located at each door to an* ***area of refuge*** *and exterior area for assisted rescue in accordance with the requirements of the* ***applicable building code****.*

506.10 Directional Signage. *Directional signage indicating the location of all other means of egress and which of them are accessible means of egress shall be provided at the following:*

1. At exits serving a required accessible ***space*** *but not providing an approved accessible means of egress.*

2. At elevator landings.

3. Within ***areas of refuge****.*

506.11 Instructions*. In* ***areas of refuge*** *and exterior areas for assisted rescue, instructions on the use of the area under emergency conditions shall be posted. Signage shall comply with 703.5 for visual* ***characters. The instructions shall include all of the following:***

1. Persons able to use the exit stairway do so as soon as possible, unless they are assisting others.

2. Information on planned availability of assistance in the use of stairs or supervised operation of elevators and how to summon such assistance.

3. Directions for use of the two-way communication system where provided.

CHAPTER 6: PLUMBING ELEMENTS AND FACILITIES

601 General

601.1 Scope. The provisions of Chapter 6 shall apply where required by Chapter 2 or where referenced by a requirement in this document.

602 Drinking Fountains

602.1 General. Drinking fountains shall comply with 307 and 602.

602.2 Clear Floor Space. Units shall have a clear floor or ground space complying with 305 positioned for a forward approach and centered on the unit. Knee and toe clearance complying with 306 shall be provided.

EXCEPTION: A parallel approach complying with 305 shall be permitted at units for ***children's use*** where the spout is 30 inches (760 mm) maximum above the finish floor or ground and is 3⅓ inches (90 mm) maximum from the front edge of the unit, including bumpers.

602.3 Operable Parts. ***Operable parts*** shall comply with 309.

602.4 Spout Height. Spout outlets shall be 36 inches (915 mm) maximum above the finish floor or ground.

602.5 Spout Location. The spout shall be located 15 inches (380 mm) minimum from the vertical support and 5 inches (125 mm) maximum from the front edge of the unit, including bumpers.

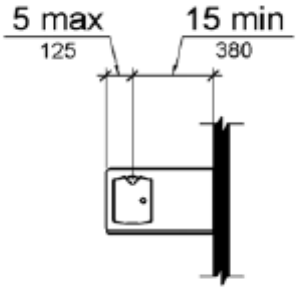

Figure 602.5 Drinking Fountain Spout Location

602.6 Water Flow. The spout shall provide a flow of water 4 inches (100 mm) high minimum and shall be located 5 inches (125 mm) maximum from the front of the unit. The angle of the water stream shall be measured horizontally relative to the front face of the unit. Where spouts

are located less than 3 inches (75 mm) of the front of the unit, the angle of the water stream shall be 30 degrees maximum. Where spouts are located between 3 inches (75 mm) and 5 inches (125 mm) maximum from the front of the unit, the angle of the water stream shall be 15 degrees maximum.

602.7 Drinking Fountains for Standing Persons. Spout outlets of drinking fountains for standing persons shall be 38 inches (965 mm) minimum and 43 inches (1090 mm) maximum above the finish floor or ground.

603 Toilet and Bathing Rooms

603.1 General. Toilet and bathing rooms shall comply with 603.

603.2 Clearances. Clearances shall comply with 603.2.

603.2.1 Turning Space. Turning space complying with 304 shall be provided within the room.

603.2.2 Overlap. Required clear floor spaces, clearance at fixtures, and turning space shall be permitted to overlap.

603.2.3 Door Swing. Doors shall not swing into the clear floor space or clearance required for any fixture. Doors shall be permitted to swing into the required turning space.

EXCEPTIONS:

1. Doors to a toilet room or bathing room for a single occupant accessed only through a private office and not for ***common use*** or ***public use*** shall be permitted to swing into the clear floor space or clearance provided the swing of the door can be reversed to comply with 603.2.3.

2. Where the toilet room or bathing room is for individual use and a clear floor space complying with 305.3 is provided within the room beyond the arc of the door swing, doors shall be permitted to swing into the clear floor space or clearance required for any fixture. *This exception shall also apply to toilet and bathing rooms within* ***dwelling units*** *required to comply with 812.*

603.3 Mirrors. Mirrors located above lavatories or countertops shall be installed with the bottom edge of the reflecting surface 40 inches (1015 mm) maximum above the finish floor or ground.

Mirrors not located above lavatories or countertops shall be installed with the bottom edge of the reflecting surface 35 inches (890 mm) maximum above the finish floor or ground.

603.4 Coat Hooks and Shelves. Coat hooks *and shelves* shall be located within one of the reach ranges specified in 308. Shelves shall be located 40 inches (1015 mm) minimum and 48 inches (1220 mm) maximum above the finish floor.

604 Water Closets and Toilet Compartments

604.1 General. Water closets and toilet compartments shall comply with 604.2 through 604.8.

EXCEPTION: Water closets and toilet compartments for ***children's use*** shall be permitted to comply with 604.9.

604.2 Location. The water closet shall be positioned with a wall or partition to the rear and to one side. The centerline of the water closet shall be 16 inches (405 mm) minimum to 18 inches (455 mm) maximum from the side wall or partition, except that the water closet shall be 17 inches (430 mm) minimum and 19 inches (485 mm) maximum from the side wall or partition in the ambulatory accessible toilet compartment specified in 604.8.2. Water closets shall be arranged for a left-hand or right-hand approach.

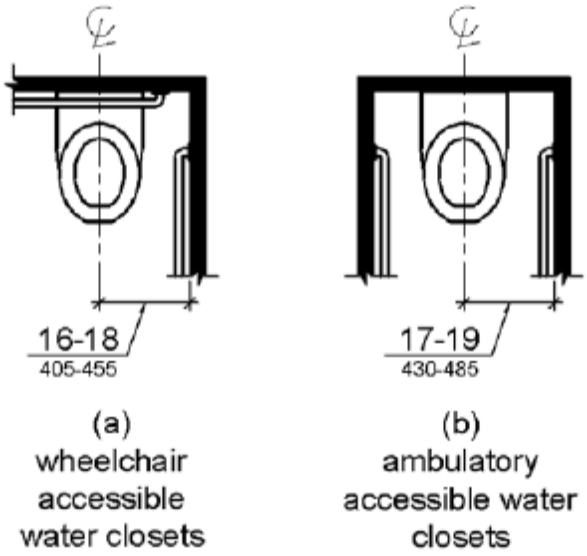

Figure 604.2 Water Closet Location

604.3 Clearance. Clearances around water closets and in toilet compartments shall comply with 604.3.

604.3.1 Size. Clearance around a water closet shall be 60 inches (1525 mm) minimum measured perpendicular from the side wall and 56 inches (1420 mm) minimum measured perpendicular from the rear wall.

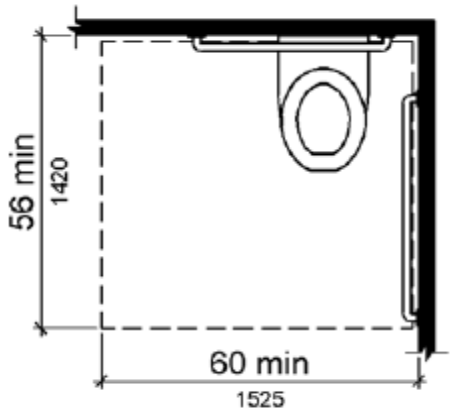

Figure 604.3.1 Size of Clearance at Water Closets

604.3.2 Overlap. The required clearance around the water closet shall be permitted to overlap the water closet, associated grab bars, dispensers, sanitary napkin disposal units, coat hooks, shelves, ***accessible routes***, clear floor space and clearances required at other fixtures, and the turning space. No other fixtures or obstructions shall be located within the required water closet clearance.

EXCEPTION: In ***residential dwelling units*** *required to comply with 809 and in multi-story housing required to comply with 812*, a lavatory complying with 606 shall be permitted on the rear wall 18 inches (455 mm) minimum from the water closet centerline where the clearance at the water closet is 66 inches (1675 mm) minimum measured perpendicular from the rear wall.

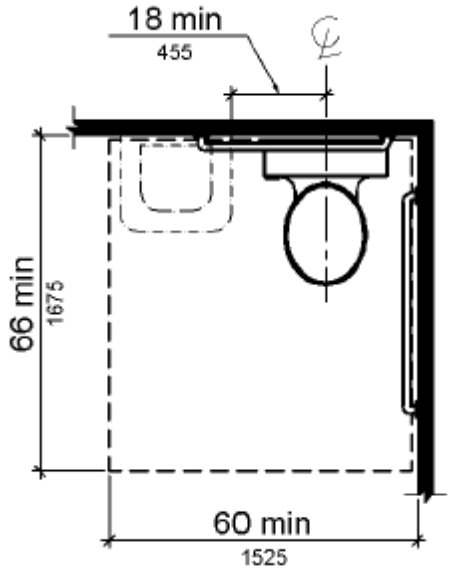

Figure 604.3.2 (Exception) Overlap of Water Closet Clearance in Residential Dwelling Units

604.3.3 Changes in Level. *Floor or ground surface within the required clearance shall comply with 302. Changes in level are not permitted.*

EXCEPTION: *Slopes not steeper than 1:48 shall be permitted.*

604.4 Seats. The seat height of a water closet above the finish floor shall be 17 inches (430 mm) minimum and 19 inches (485 mm) maximum measured to the top of the seat. Seats shall not be sprung to return to a lifted position.

EXCEPTIONS:

1. A water closet in a toilet room for a single occupant accessed only through a private office and not for ***common use*** or ***public use*** shall not be required to comply with 604.4.

2. In ***residential dwelling units*** *required to comply with 809 or 812*, the height of water closets shall be permitted to be 15 inches (380 mm) minimum and 19 inches (485 mm) maximum above the finish floor measured to the top of the seat.

604.5 Grab Bars. Grab bars for water closets shall comply with 609. Grab bars shall be provided on the side wall closest to the water closet and on the rear wall.

EXCEPTIONS:

1. Grab bars shall not be required to be installed in a toilet room for a single occupant accessed only through a private office and not for ***common use*** or ***public use*** provided that reinforcement has been installed in walls and located so as to permit the installation of grab bars complying with 604.5.

2. In ***residential dwelling units*** *required to comply with 809 and in multi-story housing required to comply with 812*, grab bars shall not be required to be installed in toilet or bathrooms provided that reinforcement has been installed in walls and located so as to permit the installation of grab bars complying with 607.4.

3. In detention or correction ***facilities***, grab bars shall not be required to be installed in housing or holding cells that are specially designed without protrusions for purposes of suicide prevention.

604.5.1 Side Wall. The side wall grab bar shall be 42 inches (1065 mm) long minimum, located 12 inches (305 mm) maximum from the rear wall and extending 54 inches (1370 mm) minimum from the rear wall.

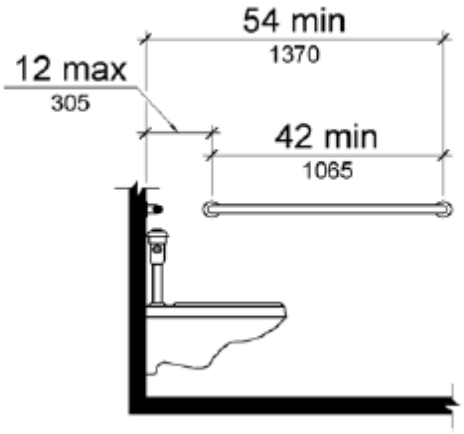

Figure 604.5.1 Side Wall Grab Bar at Water Closets

604.5.2 Rear Wall. The rear wall grab bar shall be 36 inches (915 mm) long minimum and extend from the centerline of the water closet 12 inches (305 mm) minimum on one side and 24 inches (610 mm) minimum on the other side.

EXCEPTIONS:

1. The rear grab bar shall be permitted to be 24 inches (610 mm) long minimum, centered on the water closet, where wall space does not permit a length of 36 inches (915 mm) minimum due to the location of a recessed fixture adjacent to the water closet.

2. Where an ***administrative authority*** requires flush controls for flush valves to be located in a position that conflicts with the location of the rear grab bar, then the rear grab bar shall be permitted to be split or shifted to the open side of the toilet area.

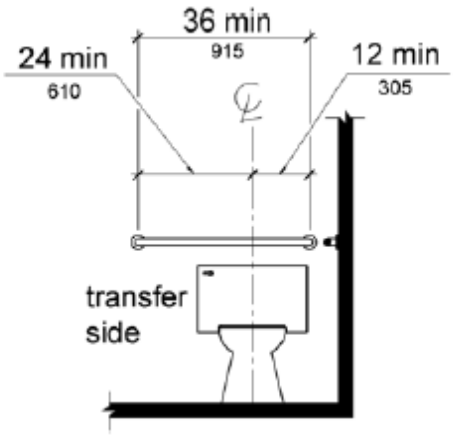

Figure 604.5.2 Rear Wall Grab Bar at Water Closets

604.6 Flush Controls. Flush controls shall be hand operated or automatic. Hand operated flush controls shall comply with 309. Flush controls shall be located on the open side of the water closet except in ambulatory accessible compartments complying with 604.8.2.

604.7 Dispensers. Toilet paper dispensers shall comply with 309.4 and shall be 7 inches (180 mm) minimum and 9 inches (230 mm) maximum in front of the water closet measured to the centerline of the dispenser. The outlet of the dispenser shall be 15 inches (380 mm) minimum and 48 inches (1220 mm) maximum above the finish floor and shall not be located behind grab bars. Dispensers shall not be of a type that controls delivery or that does not allow continuous paper flow.

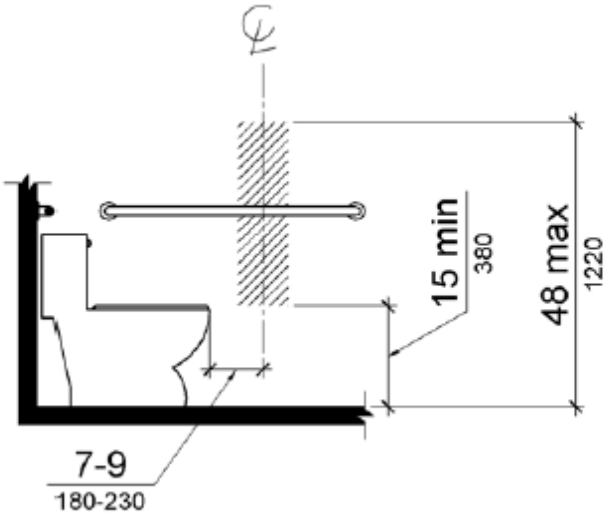

Figure 604.7 Dispenser Outlet Location

604.8 Toilet Compartments. Wheelchair accessible toilet compartments shall meet the requirements of 604.8.1 and 604.8.3. Compartments containing more than one plumbing fixture shall comply with 603. Ambulatory accessible compartments shall comply with 604.8.2 and 604.8.3.

604.8.1 Wheelchair Accessible Compartments. Wheelchair accessible compartments shall comply with 604.8.1.

604.8.1.1 Size. Wheelchair accessible compartments shall be 60 inches (1525 mm) wide minimum measured perpendicular to the side wall, and 56 inches (1420 mm) deep minimum for wall hung water closets and 59 inches (1500 mm) deep minimum for floor mounted water closets measured perpendicular to the rear wall. Wheelchair accessible compartments for ***children's use*** shall be 60 inches (1525 mm) wide minimum measured perpendicular to the side wall, and 59 inches (1500 mm) deep minimum for wall hung and floor mounted water closets measured perpendicular to the rear wall.

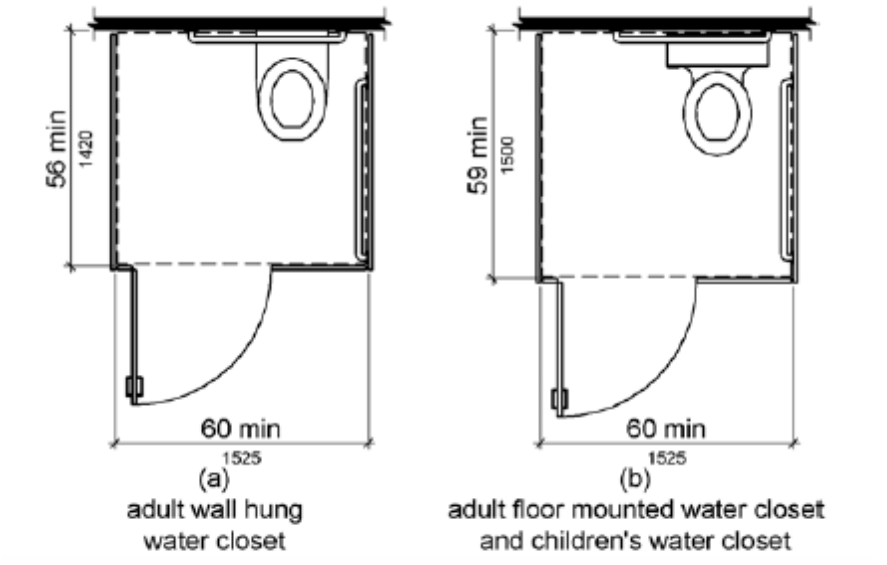

Figure 604.8.1.1 Size of Wheelchair Accessible Toilet Compartment

604.8.1.2 Doors. Toilet compartment doors, including door hardware, shall comply with 404 except that if the approach is to the latch side of the compartment door, clearance between the door side of the compartment and any obstruction shall be 42 inches (1065 mm) minimum. Doors shall be located in the front partition or in the side wall or partition farthest from the water closet. Where located in the front partition, the door opening shall be 4 inches (100 mm) maximum from the side wall or partition farthest from the water closet. Where located in the side wall or partition, the door opening shall be 4 inches (100 mm) maximum from the front partition. The door shall be self-closing. A door pull complying with 404.2.7 shall be placed on both sides of the door near the latch. Toilet compartment doors shall not swing into the minimum required compartment area.

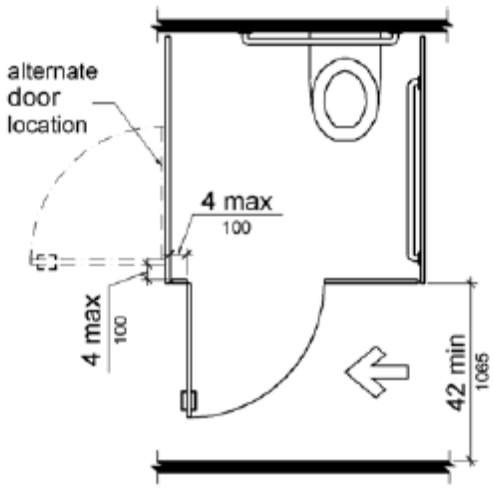

Figure 604.8.1.2 Wheelchair Accessible Toilet Compartment Doors

604.8.1.3 Approach. Compartments shall be arranged for left-hand or right-hand approach to the water closet.

604.8.1.4 Toe Clearance. The front partition and at least one side partition shall provide a toe clearance of 9 inches (230 mm) minimum above the finish floor and 6 inches (150 mm) deep minimum beyond the compartment-side face of the partition, exclusive of partition support members. Compartments for ***children's use*** shall provide a toe clearance of 12 inches (305 mm) minimum above the finish floor.

EXCEPTION: Toe clearance at the front partition is not required in a compartment greater than 62 inches (1575 mm) deep with a wall-hung water closet or 65 inches (1650 mm) deep with a floor-mounted water closet. Toe clearance at the side partition is not required in a compartment greater than 66 inches (1675 mm) wide. Toe clearance at the front partition is not required in a compartment for ***children's use*** that is greater than 65 inches (1650 mm) deep.

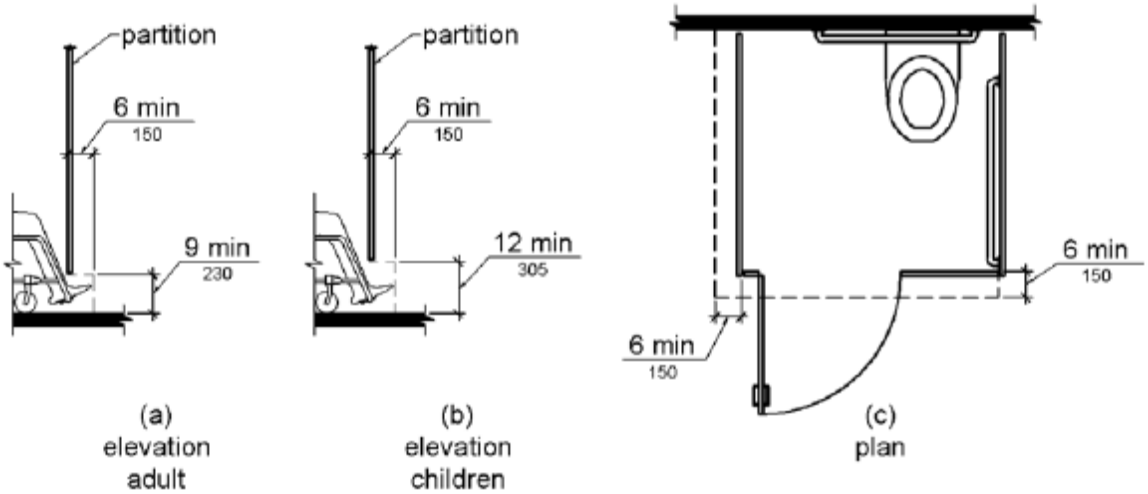

Figure 604.8.1.4 Wheelchair Accessible Toilet Compartment Toe Clearance

604.8.1.5 Grab Bars. Grab bars shall comply with 609. A side-wall grab bar complying with 604.5.1 shall be provided and shall be located on the wall closest to the water closet. In addition, a rear-wall grab bar complying with 604.5.2 shall be provided.

604.8.2 Ambulatory Accessible Compartments. Ambulatory accessible compartments shall comply with 604.8.2.

604.8.2.1 Size. Ambulatory accessible compartments shall have a depth of 60 inches (1525 mm) minimum and a width of 35 inches (890 mm) minimum and 37 inches (940 mm) maximum.

604.8.2.2 Doors. Toilet compartment doors, including door hardware, shall comply with 404, except that if the approach is to the latch side of the compartment door, clearance between the door side of the compartment and any obstruction shall be 42 inches (1065 mm) minimum. The door shall be self-closing. A door pull complying with 404.2.7 shall be placed on both sides of the door near the latch. Toilet compartment doors shall not swing into the minimum required compartment area.

604.8.2.3 Grab Bars. Grab bars shall comply with 609. A side-wall grab bar complying with 604.5.1 shall be provided on both sides of the compartment.

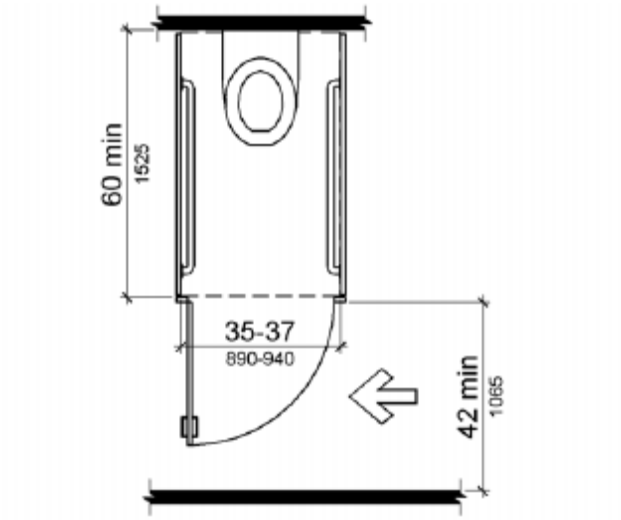

Figure 604.8.2 Ambulatory Accessible Toilet Compartment

604.8.3 Coat Hooks and Shelves. Coat hooks shall be located within one of the reach ranges specified in 308. Shelves shall be located 40 inches (1015 mm) minimum and 48 inches (1220 mm) maximum above the finish floor.

604.9 Water Closets and Toilet Compartments for Children's Use. Water closets and toilet compartments for ***children's use*** shall comply with 604.9.

604.9.1 Location. The water closet shall be located with a wall or partition to the rear and to one side. The centerline of the water closet shall be 12 inches (305 mm) minimum and 18 inches (455 mm) maximum from the side wall or partition, except that the water closet shall be 17 inches (430 mm) minimum and 19 inches (485 mm) maximum from the side wall or partition in the ambulatory accessible toilet compartment specified in 604.8.2. Compartments shall be arranged for left-hand or right-hand approach to the water closet.

604.9.2 Clearance. Clearance around a water closet shall comply with 604.3.

604.9.3 Height. The height of water closets shall be 11 inches (280 mm) minimum and 17 inches (430 mm) maximum measured to the top of the seat. Seats shall not be sprung to return to a lifted position.

604.9.4 Grab Bars. Grab bars for water closets shall comply with 604.5.

604.9.5 Flush Controls. Flush controls shall be hand operated or automatic. Hand operated flush controls shall comply with 309.2 and 309.4 and shall be installed 36 inches (915 mm) maximum above the finish floor. Flush controls shall be located on the open side of the water closet except in ambulatory accessible compartments complying with 604.8.2.

604.9.6 Dispensers. Toilet paper dispensers shall comply with 309.4 and shall be 7 inches (180 mm) minimum and 9 inches (230 mm) maximum in front of the water closet measured to the centerline of the dispenser. The outlet of the dispenser shall be 14 inches (355 mm) minimum and 19 inches (485 mm) maximum above the finish floor. There shall be a clearance of 1 1/2 inches (38 mm) minimum below the grab bar. Dispensers shall not be of a type that controls delivery or that does not allow continuous paper flow.

604.9.7 Toilet Compartments. Toilet compartments shall comply with 604.8.

605 Urinals

605.1 General. Urinals shall comply with 605.

605.2 Height and Depth. Urinals shall be the stall-type or the wall-hung type with the rim 17 inches (430 mm) maximum above the finish floor or ground. Urinals shall be 13 1/2 inches (345 mm) deep minimum measured from the outer face of the urinal rim to the back of the fixture.

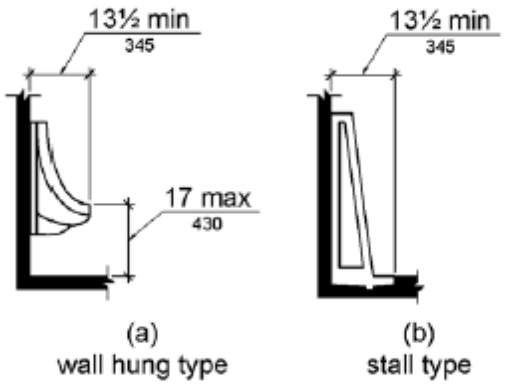

Figure 605.2 Height and Depth of Urinals

605.3 Clear Floor Space. A clear floor or ground space complying with 305 positioned for forward approach shall be provided.

605.4 Flush Controls. Flush controls shall be hand operated or automatic. Hand operated flush controls shall comply with 309.

606 Lavatories and Sinks

606.1 General. Lavatories and sinks shall comply with 606.

606.2 Clear Floor Space. A clear floor space complying with 305, positioned for a forward approach, and knee and toe clearance complying with 306 shall be provided.

EXCEPTIONS:

1. A parallel approach complying with 305 shall be permitted to a kitchen sink in a ***space*** where a cook top or conventional range is not provided and to wet bars.

2. A lavatory in a toilet room or bathing ***facility*** for a single occupant accessed only through a private office and not for ***common use*** or ***public use*** shall not be required to provide knee and toe clearance complying with 306.

3. In ***residential dwelling units*** *required to comply with 809 812*, cabinetry shall be permitted under lavatories and kitchen sinks provided that all of the following conditions are met:

(a) the cabinetry can be removed without removal or replacement of the fixture;

(b) the finish floor extends under the cabinetry; and

(c) the walls behind and surrounding the cabinetry are finished.

4. A knee clearance of 24 inches (610 mm) minimum above the finish floor or ground shall be permitted at lavatories and sinks used primarily by children 6 through 12 years where the rim or counter surface is 31 inches (785 mm) maximum above the finish floor or ground.

5. A parallel approach complying with 305 shall be permitted to lavatories and sinks used primarily by children 5 years and younger.

6. The dip of the overflow shall not be considered in determining knee and toe clearances.

7. No more than one bowl of a multi-bowl sink shall be required to provide knee and toe clearance complying with 306.

606.3 Height. Lavatories and sinks shall be installed with the front of the higher of the rim or counter surface 34 inches (865 mm) maximum above the finish floor or ground.

EXCEPTIONS:

1. A lavatory in a toilet or bathing ***facility*** for a single occupant accessed only through a private office and not for ***common use*** or ***public use*** shall not be required to comply with 606.3.

2. In ***residential dwelling unit*** kitchens *required to comply with 809 or 812*, sinks that are adjustable to variable heights, 29 inches (735 mm) minimum and 36 inches (915 mm) maximum, shall be permitted where rough-in plumbing permits connections of supply and drain pipes for sinks mounted at the height of 29 inches (735 mm).

606.4 Faucets. Controls for faucets shall comply with 309. Hand-operated metering faucets shall remain open for 10 seconds minimum.

606.5 Exposed Pipes and Surfaces. Water supply and drain pipes under lavatories and sinks shall be insulated or otherwise configured to protect against contact. There shall be no sharp or abrasive surfaces under lavatories and sinks.

607 Bathtubs

607.1 General. Bathtubs shall comply with 607.

607.2 Clearance. Clearance in front of bathtubs shall extend the length of the bathtub and shall be 30 inches (760 mm) wide minimum. A lavatory complying with 606 shall be permitted at the control end of the clearance. Where a permanent seat is provided at the head end of the bathtub, the clearance shall extend 12 inches (305 mm) minimum beyond the wall at the head end of the bathtub. *Floor or ground surface within the required clearance shall comply with 302. Changes in level are not permitted.*

EXCEPTION: *Slopes not steeper than 1:48 shall be permitted.*

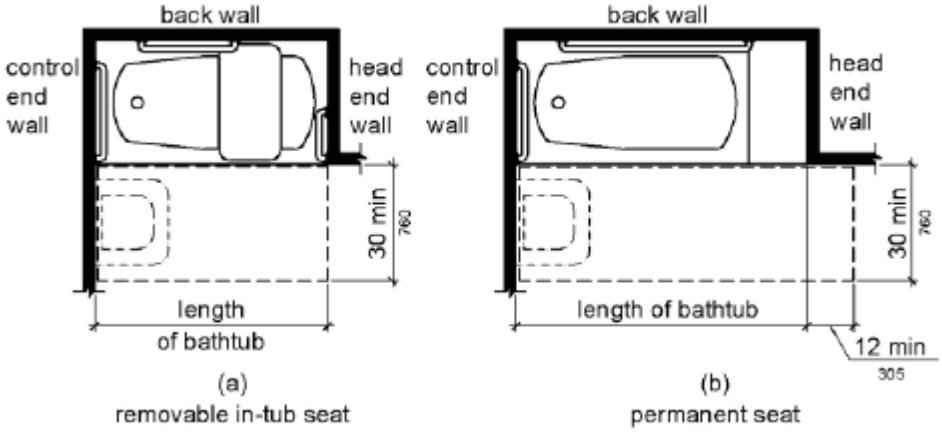

Figure 607.2 Clearance for Bathtubs

607.3 Seat. A permanent seat at the head end of the bathtub or a removable in-tub seat shall be provided. Seats shall comply with 610.

607.4 Grab Bars. Grab bars for bathtubs shall comply with 609 and shall be provided in accordance with 607.4.1 or 607.4.2.

EXCEPTIONS:

1. Grab bars shall not be required to be installed in a bathtub located in a bathing ***facility*** for a single occupant accessed only through a private office and not for ***common use*** or ***public use*** provided that reinforcement has been installed in walls and located so as to permit the installation of grab bars complying with 607.4.

2. In ***residential dwelling units*** *required to comply with 809 and in* ***multi-story housing*** *required to comply with 812*, grab bars shall not be required to be installed in bathtubs located in bathing ***facilities*** provided that reinforcement has been installed in walls and located so as to permit the installation of grab bars complying with 607.4.

607.4.1 Bathtubs with Permanent Seats. For bathtubs with permanent seats, grab bars shall be provided in accordance with 607.4.1.

607.4.1.1 Back Wall. Two grab bars shall be installed on the back wall, one located in accordance with 609.4 and the other located 8 inches (205 mm) minimum and 10 inches (255 mm) maximum above the rim of the bathtub. Each grab bar shall be installed 15 inches (380

mm) maximum from the head end wall and 12 inches (305 mm) maximum from the control end wall.

607.4.1.2 Control End Wall. A grab bar 24 inches (610 mm) long minimum shall be installed on the control end wall at the front edge of the bathtub.

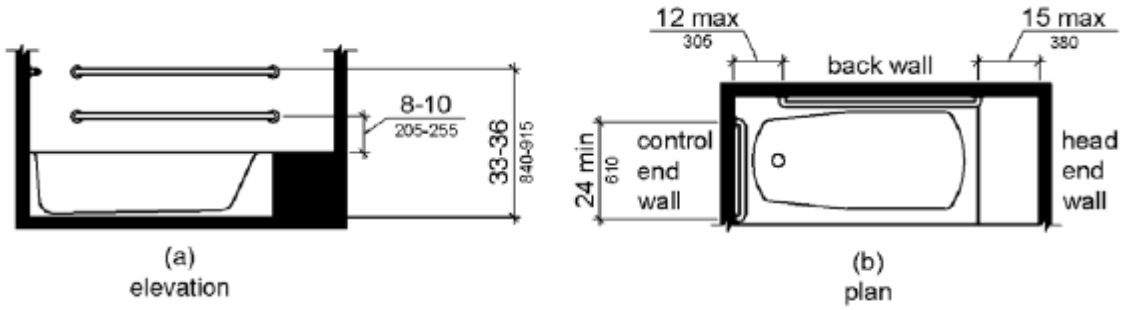

Figure 607.4.1 Grab Bars for Bathtubs with Permanent Seats

607.4.2 Bathtubs without Permanent Seats. For bathtubs without permanent seats, grab bars shall comply with 607.4.2.

607.4.2.1 Back Wall. Two grab bars shall be installed on the back wall, one located in accordance with 609.4 and other located 8 inches (205 mm) minimum and 10 inches (255 mm) maximum above the rim of the bathtub. Each grab bar shall be 24 inches (610 mm) long minimum and shall be installed 24 inches (610 mm) maximum from the head end wall and 12 inches (305 mm) maximum from the control end wall.

607.4.2.2 Control End Wall. A grab bar 24 inches (610 mm) long minimum shall be installed on the control end wall at the front edge of the bathtub.

607.4.2.3 Head End Wall. A grab bar 12 inches (305 mm) long minimum shall be installed on the head end wall at the front edge of the bathtub.

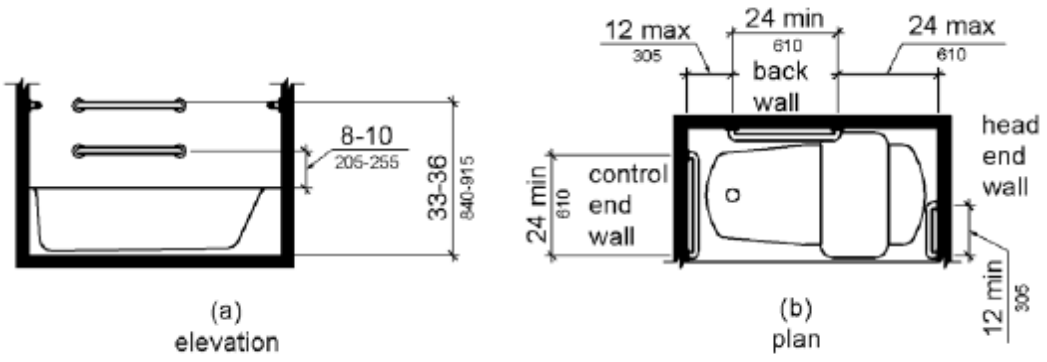

Figure 607.4.2 Grab Bars for Bathtubs with Removable In-Tub Seats

607.5 Controls. Controls, other than drain stoppers, shall be located on an end wall. Controls shall be between the bathtub rim and grab bar, and between the open side of the bathtub and the centerline of the width of the bathtub. Controls shall comply with 309.4.

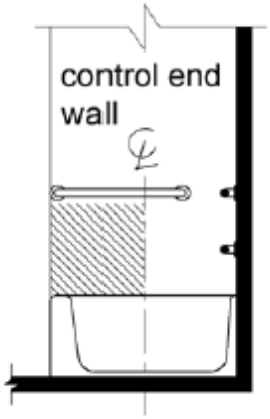

Figure 607.5 Bathtub Control Location

607.6 Shower Spray Unit and Water. A shower spray unit with a hose 59 inches (1500 mm) long minimum that can be used both as a fixed-position shower head and as a hand-held shower shall be provided. *The shower spray unit shall be located within one or more of the reach ranges specified in 308*. The shower spray unit shall have an on/off control with a non-positive shut-off. If an adjustable-height shower head on a vertical bar is used, the bar shall be installed so as not to obstruct the use of grab bars. Bathtub shower spray units shall deliver water *that does not exceed the maximum temperature allowed by the* ***Illinois Plumbing Code****.*

607.7 Bathtub Enclosures. Enclosures for bathtubs shall not obstruct controls, faucets, shower and spray units, or obstruct transfer from wheelchairs onto bathtub seats or into bathtubs. Enclosures on bathtubs shall not have tracks installed on the rim of the open face of the bathtub.

608 Shower Compartments

608.1 General. Shower compartments shall comply with 608.

608.2 Size and Clearances for Shower Compartments. Shower compartments shall have sizes and clearances complying with 608.2. *Floor or ground surface within the required clearances shall comply with 302. Changes in level are not permitted.*

EXCEPTION: *Slopes not steeper than 1:48 shall be permitted.*

608.2.1 Transfer Type Shower Compartments. Transfer type shower compartments shall be 36 inches (915 mm) by 36 inches (915 mm) clear inside dimensions measured at the center points of opposing sides and shall have a 36 inch (915 mm) wide minimum entry on the face of the shower compartment. Clearance of 36 inches (915 mm) wide minimum by 48 inches (1220 mm) long minimum measured from the control wall shall be provided.

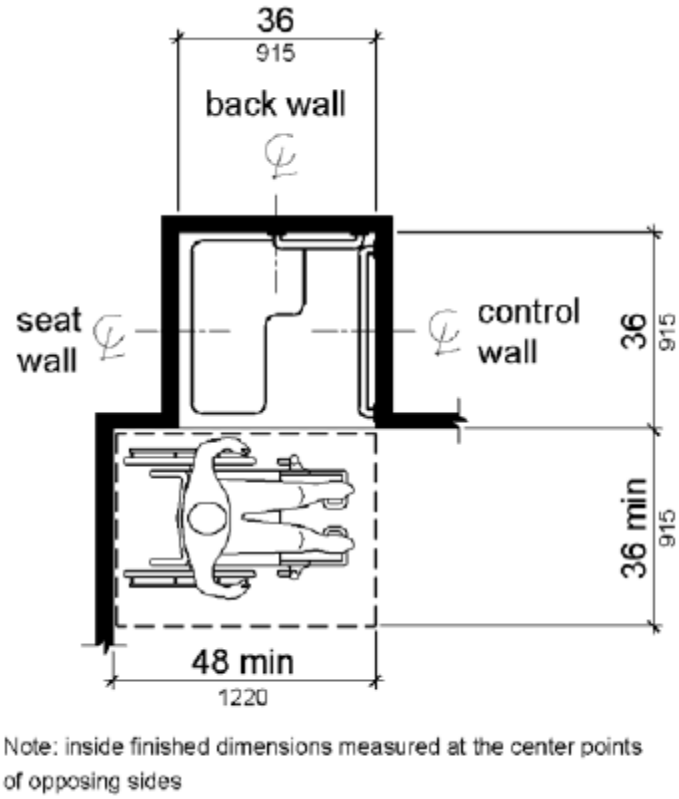

Figure 608.2.1 Transfer Type Shower Compartment Size and Clearance

608.2.2 Standard Roll-In Type Shower Compartments. Standard roll-in type shower compartments shall be 30 inches (760 mm) wide minimum by 60 inches (1525 mm) deep minimum clear inside dimensions measured at center points of opposing sides and shall have a 60 inches (1525 mm) wide minimum entry on the face of the shower compartment.

608.2.2.1 Clearance. A 30 inch (760 mm) wide minimum by 60 inch (1525 mm) long minimum clearance shall be provided adjacent to the open face of the shower compartment.

EXCEPTION: A lavatory complying with 606 shall be permitted on one 30 inch (760 mm) wide minimum side of the clearance provided that it is not on the side of the clearance adjacent to the controls or, where provided, not on the side of the clearance adjacent to the shower seat.

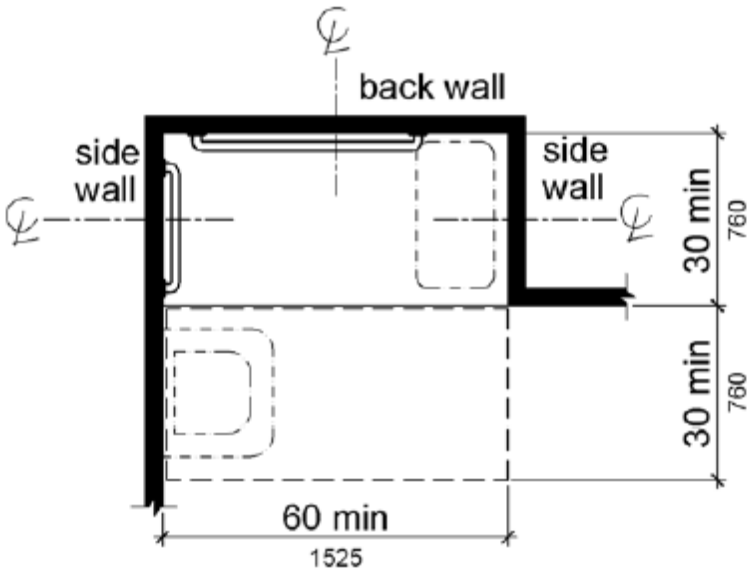

Note: inside finished dimensions measured at the center points of opposing sides

Figure 608.2.2 Standard Roll-In Type Shower Compartment Size and Clearance

608.2.3 Alternate Roll-In Type Shower Compartments. Alternate roll-in type shower compartments shall be 36 inches (915 mm) wide and 60 inches (1525 mm) deep minimum clear inside dimensions measured at center points of opposing sides. A 36 inch (915 mm) wide minimum entry shall be provided at one end of the long side of the compartment.

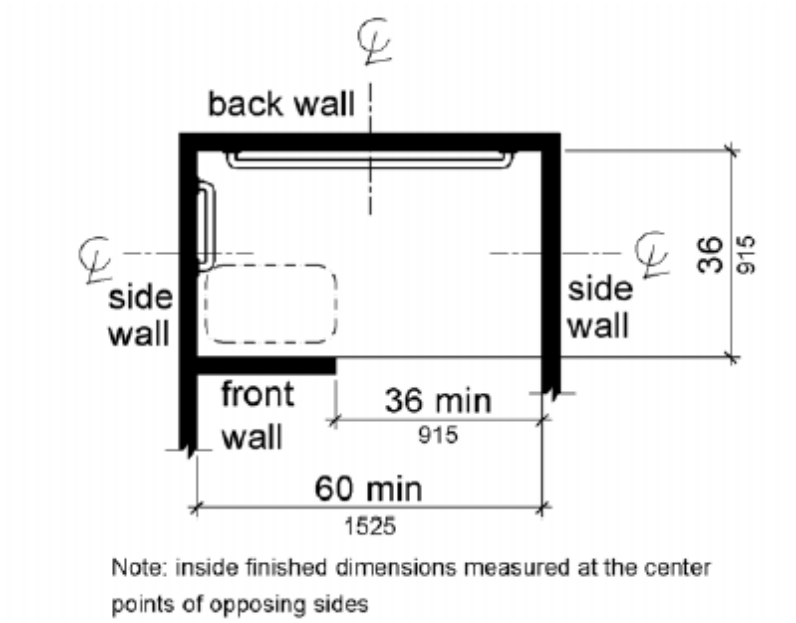

Figure 608.2.3 Alternate Roll-In Type Shower Compartment Size and Clearance

608.3 Grab Bars. Grab bars shall comply with 609 and shall be provided in accordance with 608.3. Where multiple grab bars are used, required horizontal grab bars shall be installed at the same height above the finish floor.

EXCEPTIONS:

1. Grab bars shall not be required to be installed in a shower located in a bathing ***facility*** for a single occupant accessed only through a private office, and not for ***common use*** or ***public use*** provided that reinforcement has been installed in walls and located so as to permit the installation of grab bars complying with 608.3.

2. In ***residential dwelling units*** *required to comply with 809 and in multi-story housing required to comply with 812*, grab bars shall not be required to be installed in showers located in bathing ***facilities*** provided that reinforcement has been installed in walls and located so as to permit the installation of grab bars complying with 608.3.

608.3.1 Transfer Type Shower Compartments. In transfer type compartments, grab bars shall be provided across the control wall and back wall to a point 18 inches (455 mm) from the control wall.

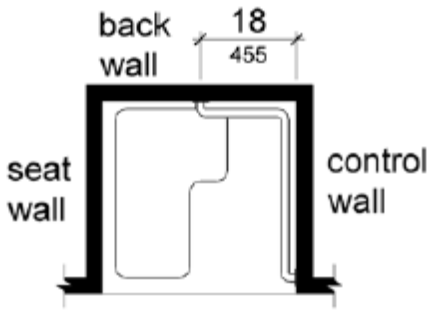

Figure 608.3.1 Grab Bars for Transfer Type Showers

608.3.2 Standard Roll-In Type Shower Compartments. Where a seat is provided in standard roll-in type shower compartments, grab bars shall be provided on the back wall and the side wall opposite the seat. Grab bars shall not be provided above the seat. Where a seat is not provided in standard roll-in type shower compartments, grab bars shall be provided on three walls. Grab bars shall be installed 6 inches (150 mm) maximum from adjacent walls.

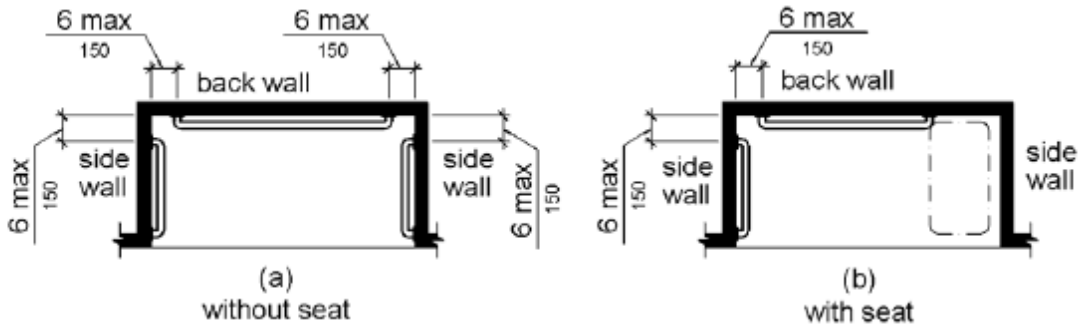

Figure 608.3.2 Grab Bars for Standard Roll-In Type Showers

608.3.3 Alternate Roll-In Type Shower Compartments. In alternate roll-in type shower compartments, grab bars shall be provided on the back wall and the side wall farthest from the compartment entry. Grab bars shall not be provided above the seat. Grab bars shall be installed 6 inches (150 mm) maximum from adjacent walls.

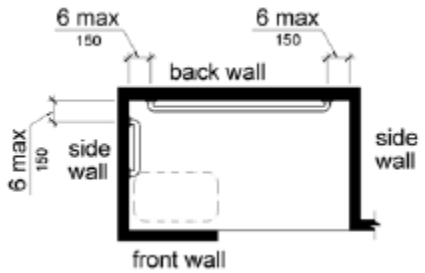

Figure 608.3.3 Grab Bars for Alternate Roll-In Type Showers

608.4 Seats. A folding or non-folding seat shall be provided in transfer type shower compartments. A folding seat shall be provided in roll-in type showers required in ***transient lodging*** guest rooms with mobility features complying with 806.2. Seats shall comply with 610.

EXCEPTION: In ***residential dwelling units*** *required to comply with 809 and in multi-story housing required to comply with 812*, seats shall not be required in transfer type shower compartments provided that reinforcement has been installed in walls so as to permit the installation of seats complying with 608.4.

608.5 Controls. Controls, faucets, and shower spray units shall comply with 309.4.

608.5.1 Transfer Type Shower Compartments. In transfer type shower compartments, the controls, faucets, and shower spray unit shall be installed on the side wall opposite the seat 38 inches (965 mm) minimum and 48 inches (1220 mm) maximum above the shower floor and shall be located on the control wall 15 inches (380 mm) maximum from the centerline of the seat toward the shower opening.

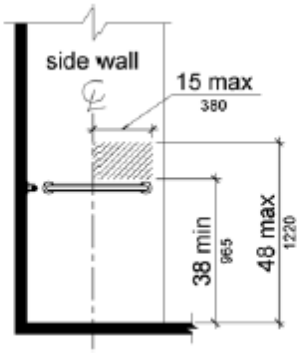

Figure 608.5.1 Transfer Type Shower Compartment Control Location

608.5.2 Standard Roll-In Type Shower Compartments. In standard roll-in type shower compartments, the controls, faucets, and shower spray unit shall be located above the grab bar, but no higher than 48 inches (1220 mm) above the shower floor. Where a seat is provided, the controls, faucets, and shower spray unit shall be installed on the back wall adjacent to the seat wall and shall be located 27 inches (685 mm) maximum from the seat wall.

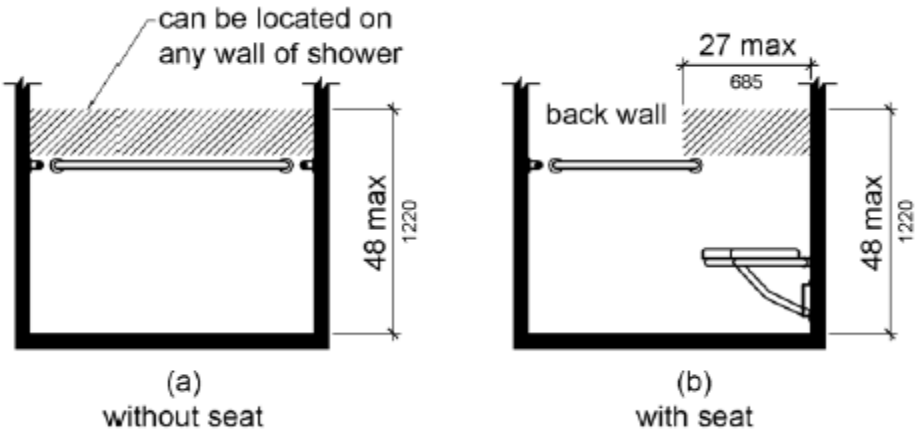

Figure 608.5.2 Standard Roll-In Type Shower Compartment Control Location

608.5.3 Alternate Roll-In Type Shower Compartments. In alternate roll-in type shower compartments, the controls, faucets, and shower spray unit shall be located above the grab bar, but no higher than 48 inches (1220 mm) above the shower floor. Where a seat is provided, the controls, faucets, and shower spray unit shall be located on the side wall adjacent to the seat 27 inches (685 mm) maximum from the side wall behind the seat or shall be located on the back wall opposite the seat 15 inches (380 mm) maximum, left or right, of the centerline of the seat. Where a seat is not provided, the controls, faucets, and shower spray unit shall be installed on the side wall farthest from the compartment entry.

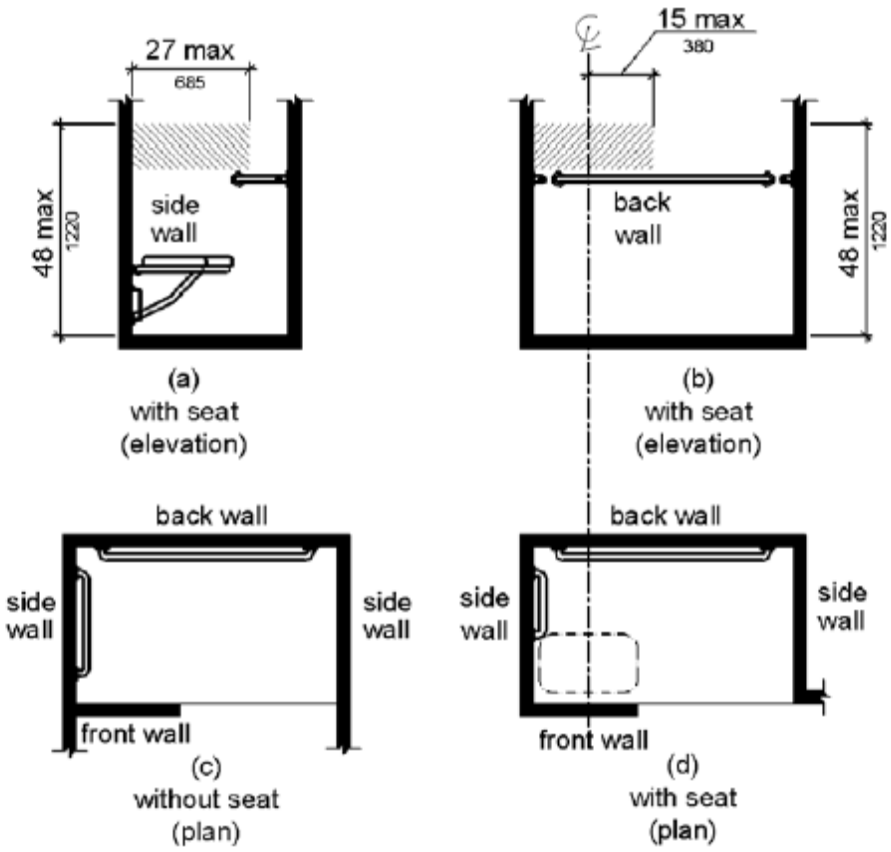

Figure 608.5.3 Alternate Roll-In Type Shower Compartment Control Location

608.6 Shower Spray Unit and Water. A shower spray unit with a hose 59 inches (1500 mm) long minimum that can be used both as a fixed-position shower head and as a hand-held shower shall be provided. The shower spray unit shall have an on/off control with a non-positive shut-off. If an adjustable-height shower head on a vertical bar is used, the bar shall be installed so as not to obstruct the use of grab bars or shower controls. Shower spray units shall deliver water *that does not exceed the maximum temperature allowed by the* ***Illinois Plumbing Code****.*

EXCEPTION: A fixed shower head located at 48 inches (1220 mm) maximum above the shower finish floor shall be permitted instead of a hand-held spray unit in ***facilities*** that are not medical care ***facilities***, long-term care ***facilities***, ***transient lodging*** guest rooms, or ***residential dwelling units*** *required to comply with 809 or 812*.

608.7 Thresholds. Thresholds in roll-in type shower compartments shall be 1/2 inch (13 mm) high maximum in accordance with 303. In transfer type shower compartments, thresholds 1/2 inch (13 mm) high maximum shall be beveled, rounded, or vertical.

EXCEPTION: A threshold 2 inches (51 mm) high maximum shall be permitted in transfer type shower compartments in existing ***facilities*** where provision of a 1/2 inch (13 mm) high threshold would disturb the structural reinforcement of the floor slab.

608.8 Shower Enclosures. Enclosures for shower compartments shall not obstruct controls, faucets, and shower spray units or obstruct transfer from wheelchairs onto shower seats.

609 Grab Bars

609.1 General. Grab bars in toilet ***facilities*** and bathing ***facilities*** shall comply with 609.

609.2 Cross Section. Grab bars shall have a cross section complying with 609.2.1 or 609.2.2.

609.2.1 Circular Cross Section. Grab bars with circular cross sections shall have an outside diameter of 1 1/4 inches (32 mm) minimum and 2 inches (51 mm) maximum.

609.2.2 Non-Circular Cross Section. Grab bars with non-circular cross sections shall have a cross-section dimension of 2 inches (51 mm) maximum and a perimeter dimension of 4 inches (100 mm) minimum and 4.8 inches (120 mm) maximum.

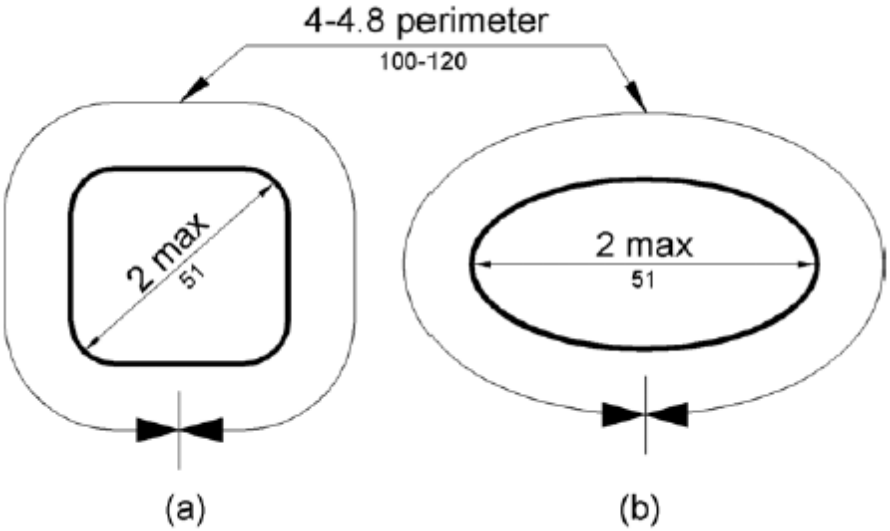

Figure 609.2.2 Grab Bar Non-Circular Cross Section

609.3 Spacing. The space between the wall and the grab bar shall be 1 1/2 inches (38 mm). The space between the grab bar and projecting objects below and at the ends shall be 1 1/2 inches (38 mm) minimum. The space between the grab bar and projecting objects above shall be 12 inches (305 mm) minimum.

EXCEPTION: The space between the grab bars and shower controls, shower fittings, and other grab bars above shall be permitted to be 1 1/2 inches (38 mm) minimum.

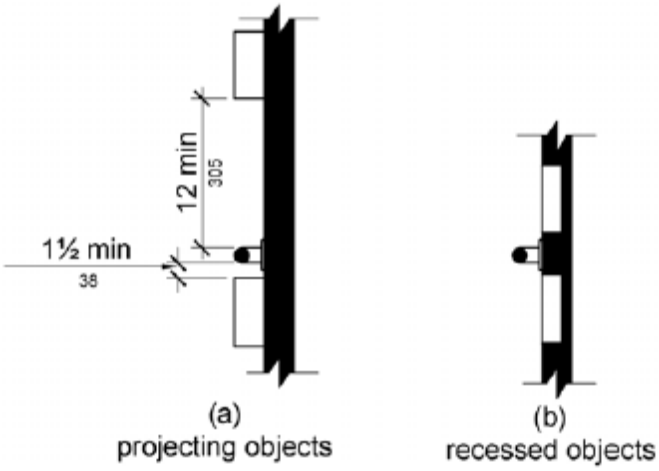

Figure 609.3 Spacing of Grab Bars

609.4 Position of Grab Bars. Grab bars shall be installed in a horizontal position, 33 inches (840 mm) minimum and 36 inches (915 mm) maximum above the finish floor measured to the top of the gripping surface, except that at water closets for ***children's use*** complying with 604.9, grab bars shall be installed in a horizontal position 18 inches (455 mm) minimum and 27 inches (685 mm) maximum above the finish floor measured to the top of the gripping surface. The height of the lower grab bar on the back wall of a bathtub shall comply with 607.4.1.1 or 607.4.2.1.

609.5 Surface Hazards. Grab bars and any wall or other surfaces adjacent to grab bars shall be free of sharp or abrasive ***elements*** and shall have rounded edges.

609.6 Fittings. Grab bars shall not rotate within their fittings.

609.7 Installation. Grab bars shall be installed in any manner that provides a gripping surface at the specified locations and that does not obstruct the required clear floor space.

609.8 Structural Strength. Allowable stresses shall not be exceeded for materials used when a vertical or horizontal force of 250 pounds (1112 N) is applied at any point on the grab bar, fastener, mounting device, or supporting structure.

610 Seats

610.1 General. Seats in bathtubs and shower compartments shall comply with 610.

610.2 Bathtub Seats. The top of bathtub seats shall be 17 inches (430 mm) minimum and 19 inches (485 mm) maximum above the bathroom finish floor. The depth of a removable in-tub seat shall be 15 inches (380 mm) minimum and 16 inches (405 mm) maximum. The seat shall be capable of secure placement. Permanent seats at the head end of the bathtub shall be 15 inches (380 mm) deep minimum and shall extend from the back wall to or beyond the outer edge of the bathtub.

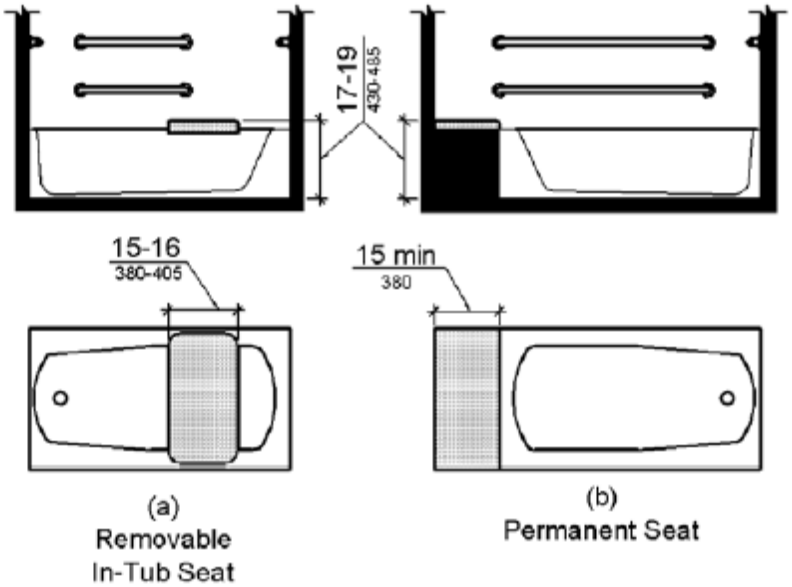

Figure 610.2 Bathtub Seats

610.3 Shower Compartment Seats. Where a seat is provided in a standard roll-in shower compartment, it shall be a folding type, shall be installed on the side wall adjacent to the controls, and shall extend from the back wall to a point within 3 inches (75 mm) of the compartment entry. Where a seat is provided in an alternate roll-in type shower compartment, it shall be a folding type, shall be installed on the front wall opposite the back wall, and shall

extend from the adjacent side wall to a point within 3 inches (75 mm) of the compartment entry. In transfer-type showers, the seat shall extend from the back wall to a point within 3 inches (75 mm) of the compartment entry. The top of the seat shall be 17 inches (430 mm) minimum and 19 inches (485 mm) maximum above the bathroom finish floor. Seats shall comply with 610.3.1 or 610.3.2.

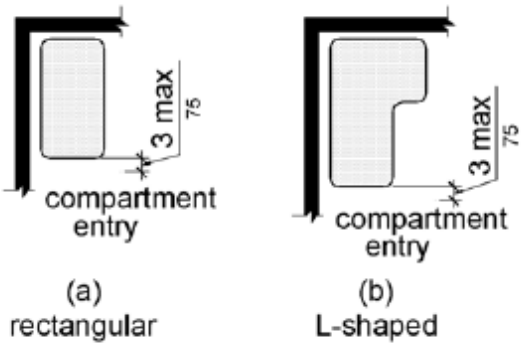

Figure 610.3 Extent of Seat

610.3.1 Rectangular Seats. The rear edge of a rectangular seat shall be 2 1/2 inches (64 mm) maximum and the front edge 15 inches (380 mm) minimum and 16 inches (405 mm) maximum from the seat wall. The side edge of the seat shall be 1 1/2 inches (38 mm) maximum from the adjacent wall.

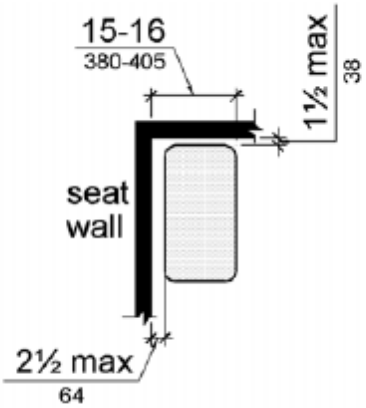

Figure 610.3.1 Rectangular Shower Seat

610.3.2 L-Shaped Seats. The rear edge of an L-shaped seat shall be 2 1/2 inches (64 mm) maximum and the front edge 15 inches (380 mm) minimum and 16 inches (405 mm) maximum from the seat wall. The rear edge of the "L" portion of the seat shall be 1 1/2 inches (38 mm) maximum from the wall and the front edge shall be 14 inches (355 mm) minimum and 15 inches (380 mm) maximum from the wall. The end of the "L" shall be 22 inches (560 mm) minimum and 23 inches maximum (585 mm) from the main seat wall.

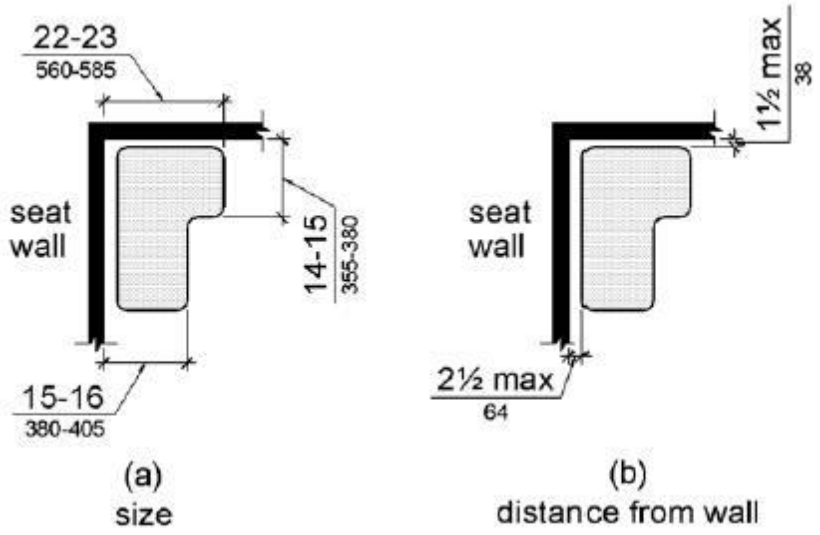

Figure 610.3.2 L-Shaped Shower Seat

610.4 Structural Strength. Allowable stresses shall not be exceeded for materials used when a vertical or horizontal force of 250 pounds (1112 N) is applied at any point on the seat, fastener, mounting device, or supporting structure.

611 Washing Machines and Clothes Dryers

611.1 General. Washing machines and clothes dryers shall comply with 611.

611.2 Clear Floor Space. A clear floor or ground space complying with 305 positioned for parallel approach shall be provided. *For top loading machines*, the clear floor or ground space shall be centered on the appliance. *For front loading machines, the clear floor or ground space shall be offset 24 inches (610 mm) maximum from the centerline of the door opening*.

611.3 Operable Parts. ***Operable parts***, including doors, lint screens, and detergent and bleach compartments shall comply with 309.

611.4 Height. Top loading machines shall have the door to the laundry compartment located 36 inches (915 mm) maximum above the finish floor. Front loading machines shall have the bottom of the opening to the laundry compartment located 15 inches (380 mm) minimum and 36 inches (915 mm) maximum above the finish floor.

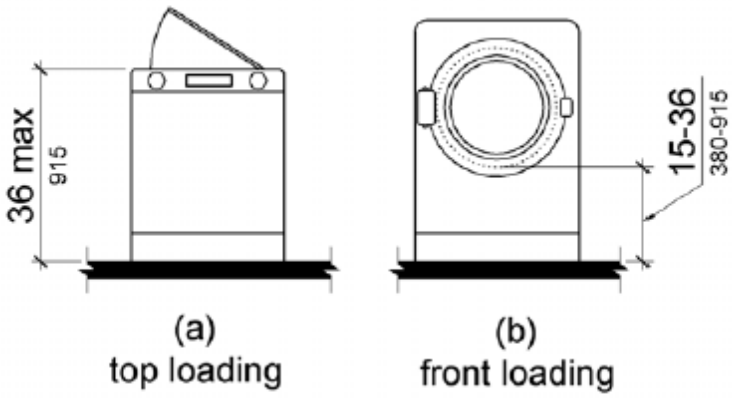

Figure 611.4 Height of Laundry Compartment Opening

612 Saunas and Steam Rooms

612.1 General. Saunas and steam rooms shall comply with 612.

612.2 Bench. Where seating is provided in saunas and steam rooms, at least one bench shall comply with 903. Doors shall not swing into the clear floor space required by 903.2.

EXCEPTION: A readily removable bench shall be permitted to obstruct the turning space required by 612.3 and the clear floor or ground space required by 903.2.

612.3 Turning Space. A turning space complying with 304 shall be provided within saunas and steam rooms.

CHAPTER 7: COMMUNICATION ELEMENTS AND FEATURES

701 General

701.1 Scope. The provisions of Chapter 7 shall apply where required by Chapter 2 or where referenced by a requirement in this document.

702 Fire Alarm Systems

702.1 General. Fire alarm systems shall have permanently installed audible and visible alarms complying with NFPA 72 *(2013 edition)* (incorporated by reference, see "Referenced Standards" in Chapter 1). In addition, alarms in guest rooms required to provide communication features shall comply with sections *18.4 and 18.5 of NFPA 72 (2013 edition)*.

EXCEPTION: Fire alarm systems in medical care ***facilities*** shall be permitted to be provided in accordance with industry practice.

703 Signs

703.1 General. Signs shall comply with 703. Where both visual and ***tactile characters*** are required, either one sign with both visual and ***tactile characters***, or two separate signs, one with visual, and one with ***tactile characters***, shall be provided.

703.2 Raised Characters. Raised ***characters*** shall comply with 703.2 and shall be duplicated in braille complying with 703.3. Raised ***characters*** shall be installed in accordance with 703.4.

703.2.1 Depth. Raised ***characters*** shall be 1/32 inch (0.8 mm) minimum above their background.

703.2.2 Case. ***Characters*** shall be uppercase.

703.2.3 Style. ***Characters*** shall be sans serif. ***Characters*** shall not be italic, oblique, script, highly decorative, or of other unusual forms.

703.2.4 Character Proportions. ***Characters*** shall be selected from fonts where the width of the uppercase letter "O" is 55 percent minimum and 110 percent maximum of the height of the uppercase letter "I".

703.2.5 Character Height. ***Character*** height measured vertically from the baseline of the ***character*** shall be 5/8 inch (16 mm) minimum and 2 inches (51 mm) maximum based on the height of the uppercase letter "I".

EXCEPTION: Where separate raised and visual ***characters*** with the same information are provided, raised ***character*** height shall be permitted to be 1/2 inch (13 mm) minimum.

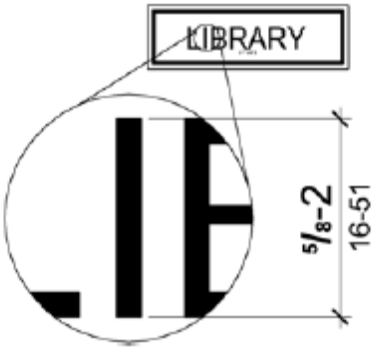

Figure 703.2.5 Height of Raised Characters

703.2.6 Stroke Thickness. Stroke thickness of the uppercase letter "I" shall be 15 percent maximum of the height of the ***character***.

703.2.7 Character Spacing. ***Character*** spacing shall be measured between the two closest points of adjacent raised ***characters*** within a message, excluding word spaces. Where ***characters*** have rectangular cross sections, spacing between individual raised ***characters*** shall be 1/8 inch (3.2 mm) minimum and 4 times the raised ***character*** stroke width maximum. Where ***characters*** have other cross sections, spacing between individual raised ***characters*** shall be 1/16 inch (1.6 mm) minimum and 4 times the raised ***character*** stroke width maximum at the base of the cross sections, and 1/8 inch (3.2 mm) minimum and 4 times the raised ***character*** stroke width maximum at the top of the cross sections. ***Characters*** shall be separated from raised borders and decorative ***elements*** 3/8 inch (9.5 mm) minimum.

703.2.8 Line Spacing. Spacing between the baselines of separate lines of raised ***characters*** within a message shall be 135 percent minimum and 170 percent maximum of the raised ***character*** height.

703.3 Braille. Braille shall be contracted (Grade 2) and shall comply with 703.3 and 703.4.

703.3.1 Dimensions and Capitalization. Braille dots shall have a domed or rounded shape and shall comply with Table 703.3.1. The indication of an uppercase letter or letters shall only be used before the first word of sentences, proper nouns and names, individual letters of the alphabet, initials, and acronyms.

Table 703.3.1 Braille Dimensions

Measurement Range	Minimum in Inches Maximum in Inches

Dot base diameter	0.059 (1.5 mm) to 0.063 (1.6 mm)
Distance between two dots in the same cell[1]	0.090 (2.3 mm) to 0.100 (2.5 mm)
Distance between corresponding dots in adjacent cells[1]	0.241 (6.1 mm) to 0.300 (7.6 mm)
Dot height	0.025 (0.6 mm) to 0.037 (0.9 mm)
Distance between corresponding dots from one cell directly below[1]	0.395 (10 mm) to 0.400 (10.2 mm)
Notes: 1. Measured center to center.	

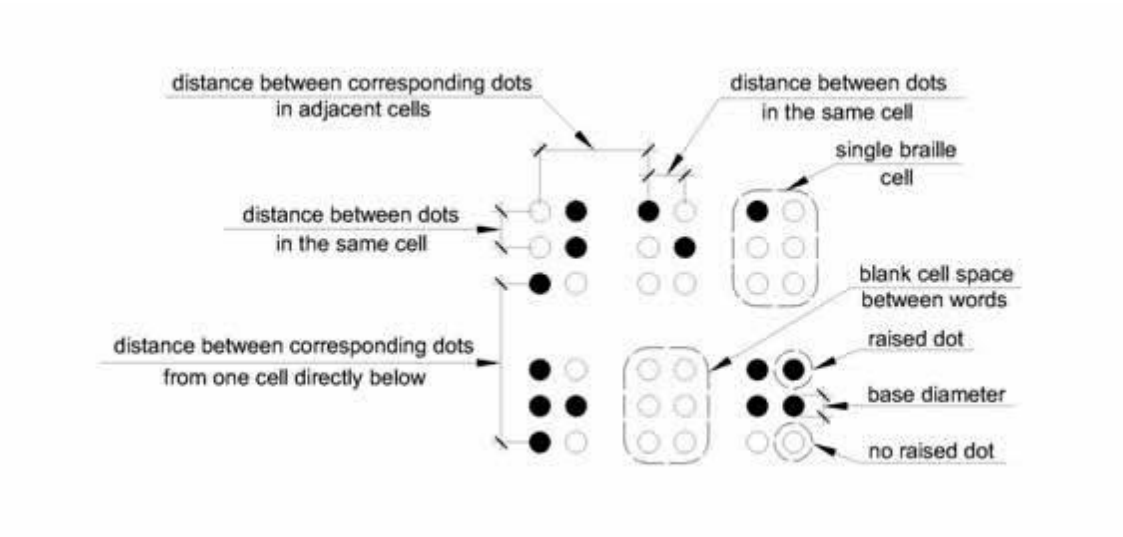

Figure 703.3.1 Braille Measurement

703.3.2 Position. Braille shall be positioned below the corresponding text. If text is multi-lined, braille shall be placed below the entire text. Braille shall be separated 3/8 inch (9.5 mm) minimum from any other ***tactile characters*** and 3/8 inch (9.5 mm) minimum from raised borders and decorative ***elements***.

EXCEPTION: Braille provided on elevator car controls shall be separated 3/16 inch (4.8 mm) minimum and shall be located either directly below or adjacent to the corresponding raised ***characters*** or symbols.

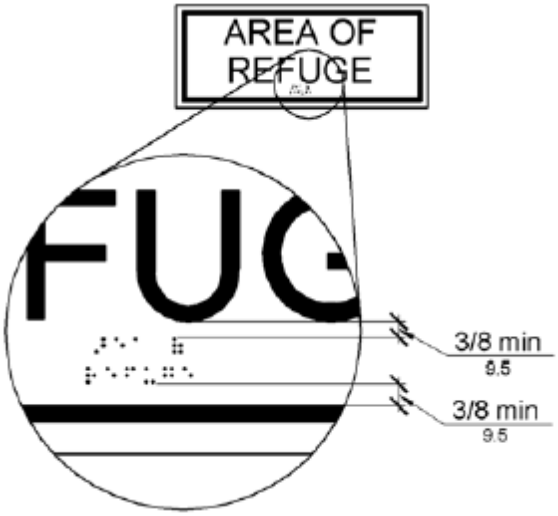

Figure 703.3.2 Position of Braille

703.4 Installation Height and Location. Signs with ***tactile characters*** shall comply with 703.4.

703.4.1 Height above Finish Floor or Ground. ***Tactile characters*** on signs shall be located 48 inches (1220 mm) minimum above the finish floor or ground surface, measured from the baseline of the lowest ***tactile character*** and 60 inches (1525 mm) maximum above the finish floor or ground surface, measured from the baseline of the highest ***tactile character***.

EXCEPTION: ***Tactile characters*** for elevator car controls shall not be required to comply with 703.4.1.

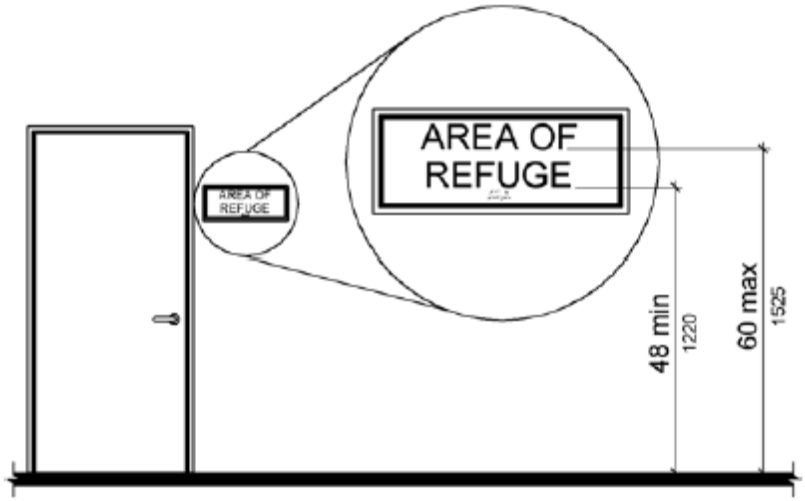

Figure 703.4.1 Height of Tactile Characters above Finish Floor or Ground

703.4.2 Location. Where a ***tactile*** sign is provided at a door, the sign shall be located alongside the door at the latch side. Where a ***tactile*** sign is provided at double doors with one active leaf, the sign shall be located on the inactive leaf. Where a ***tactile*** sign is provided at double doors with two active leafs, the sign shall be located to the right of the right hand door. Where there is no wall space at the latch side of a single door or at the right side of double doors, signs shall be located on the nearest adjacent wall. Signs containing ***tactile characters*** shall be located so that a clear floor space of 18 inches (455 mm) minimum by 18 inches (455 mm) minimum, centered on the ***tactile characters***, is provided beyond the arc of any door swing between the closed position and 45 degree open position.

EXCEPTION: Signs with ***tactile characters*** shall be permitted on the push side of doors with closers and without hold-open devices.

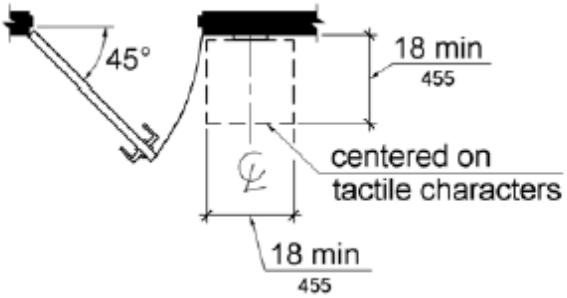

Figure 703.4.2 Location of Tactile Signs at Doors

703.5 Visual Characters. Visual ***characters*** shall comply with 703.5.

EXCEPTION: Where visual ***characters*** comply with 703.2 and are accompanied by braille complying with 703.3, they shall not be required to comply with 703.5.2 through 703.5.9.

703.5.1 Finish and Contrast. ***Characters*** and their background shall have a non-glare finish. ***Characters*** shall contrast with their background with either light ***characters*** on a dark background or dark ***characters*** on a light background.

703.5.2 Case. ***Characters*** shall be uppercase or lowercase or a combination of both.

703.5.3 Style. ***Characters*** shall be conventional in form. ***Characters*** shall not be italic, oblique, script, highly decorative, or of other unusual forms.

703.5.4 Character Proportions. ***Characters*** shall be selected from fonts where the width of the uppercase letter "O" is 55 percent minimum and 110 percent maximum of the height of the uppercase letter "I".

703.5.5 Character Height. Minimum ***character*** height shall comply with Table 703.5.5. Viewing distance shall be measured as the horizontal distance between the ***character*** and an obstruction preventing further approach towards the sign. ***Character*** height shall be based on the uppercase letter "I".

Table 703.5.5 Visual Character Height

Height to Finish Floor or Ground From Baseline of Character	Horizontal Viewing Distance	Minimum Character Height
40 inches (1015 mm) to less than or equal to 70 inches (1780 mm)	less than 72 inches (1830 mm)	5/8 inch (16 mm)
	72 inches (1830 mm) and greater	5/8 inch (16 mm), plus 1/8 inch (3.2 mm) per foot (305 mm) of viewing distance above 72 inches (1830 mm)
Greater than 70 inches (1780 mm) to less than or equal to 120 inches (3050 mm)	less than 180 inches (4570 mm)	2 inches (51 mm)
	180 inches (4570 mm) and greater	2 inches (51 mm), plus 1/8 inch (3.2 mm) per foot (305 mm) of viewing distance above 180 inches (4570 mm)

greater than 120 inches (3050 mm)	less than 21 feet (6400 mm)	3 inches (75 mm)
	21 feet (6400 mm) and greater	3 inches (75 mm), plus 1/8 inch (3.2 mm) per foot (305 mm) of viewing distance above 21 feet (6400 mm)

703.5.6 Height from Finish Floor or Ground. Visual ***characters*** shall be 40 inches (1015 mm) minimum above the finish floor or ground.

EXCEPTION: Visual ***characters*** indicating elevator car controls shall not be required to comply with 703.5.6.

703.5.7 Stroke Thickness. Stroke thickness of the uppercase letter "I" shall be 10 percent minimum and 30 percent maximum of the height of the ***character***.

703.5.8 Character Spacing. ***Character*** spacing shall be measured between the two closest points of adjacent ***characters***, excluding word spaces. Spacing between individual ***characters*** shall be 10 percent minimum and 35 percent maximum of ***character*** height.

703.5.9 Line Spacing. Spacing between the baselines of separate lines of ***characters*** within a message shall be 135 percent minimum and 170 percent maximum of the ***character*** height.

703.6 Pictograms. ***Pictograms*** shall comply with 703.6.

703.6.1 Pictogram Field. ***Pictograms*** shall have a field height of 6 inches (150 mm) minimum. ***Characters*** and braille shall not be located in the ***pictogram*** field.

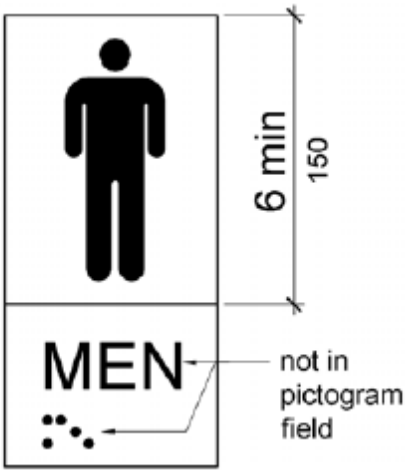

Figure 703.6.1 Pictogram Field

703.6.2 Finish and Contrast. ***Pictograms*** and their field shall have a non-glare finish. ***Pictograms*** shall contrast with their field with either a light ***pictogram*** on a dark field or a dark ***pictogram*** on a light field.

703.6.3 Text Descriptors. ***Pictograms*** shall have text descriptors located directly below the ***pictogram*** field. Text descriptors shall comply with 703.2, 703.3 and 703.4.

703.7 Symbols of Accessibility. Symbols of accessibility shall comply with 703.7.

703.7.1 Finish and Contrast. Symbols of accessibility and their background shall have a non-glare finish. Symbols of accessibility shall contrast with their background with either a light symbol on a dark background or a dark symbol on a light background.

703.7.2 Symbols.

703.7.2.1 International Symbol of Accessibility. The International Symbol of Accessibility shall comply with Figure 703.7.2.1.

Figure 703.7.2.1 International Symbol of Accessibility

703.7.2.2 International Symbol of TTY. The International Symbol of ***TTY*** shall comply with Figure 703.7.2.2.

Figure 703.7.2.2 International Symbol of TTY

703.7.2.3 Volume Control Telephones. Telephones with a volume control shall be identified by a ***pictogram*** of a telephone handset with radiating sound waves on a square field such as shown in Figure 703.7.2.3.

Figure 703.7.2.3 Volume Control Telephone

703.7.2.4 Assistive Listening Systems. ***Assistive listening systems*** shall be identified by the International Symbol of Access for Hearing Loss complying with Figure 703.7.2.4.

Figure 703.7.2.4 International Symbol of Access for Hearing Loss

704 Telephones

704.1 General. ***Public*** telephones shall comply with 704.

704.2 Wheelchair Accessible Telephones. Wheelchair accessible telephones shall comply with 704.2.

704.2.1 Clear Floor or Ground Space. A clear floor or ground space complying with 305 shall be provided. The clear floor or ground space shall not be obstructed by bases, enclosures, or seats.

704.2.1.1 Parallel Approach. Where a parallel approach is provided, the distance from the edge of the telephone enclosure to the face of the telephone unit shall be 10 inches (255 mm) maximum.

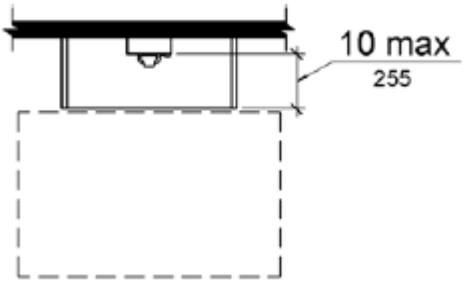

Figure 704.2.1.1 Parallel Approach to Telephone

704.2.1.2 Forward Approach. Where a forward approach is provided, the distance from the front edge of a counter within the telephone enclosure to the face of the telephone unit shall be 20 inches (510 mm) maximum.

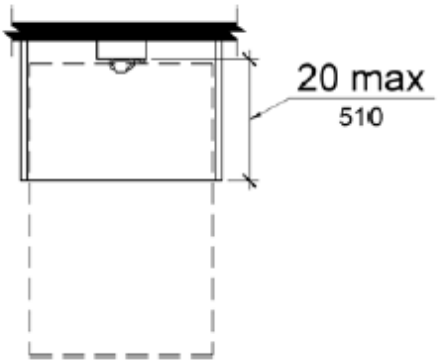

Figure 704.2.1.2 Forward Approach to Telephone

704.2.2 Operable Parts. ***Operable parts*** shall comply with 309. Telephones shall have push-button controls where such service is available.

704.2.3 Telephone Directories. Telephone directories, where provided, shall be located in accordance with 309.

704.2.4 Cord Length. The cord from the telephone to the handset shall be 29 inches (735 mm) long minimum.

704.3 Volume Control Telephones. ***Public*** telephones required to have volume controls shall be equipped with a receive volume control that provides a gain adjustable up to 20 dB minimum. For incremental volume control, provide at least one intermediate step of 12 dB of gain minimum. An automatic reset shall be provided.

704.4 TTYs. ***TTYs*** required at a ***public*** pay telephone shall be permanently affixed within, or adjacent to, the telephone enclosure. Where an acoustic coupler is used, the telephone cord shall be sufficiently long to allow connection of the ***TTY*** and the telephone receiver.

704.4.1 Height. When in use, the touch surface of ***TTY*** keypads shall be 34 inches (865 mm) minimum above the finish floor.

EXCEPTION: Where seats are provided, ***TTYs*** shall not be required to comply with 704.4.1.

704.5 TTY Shelf. ***Public*** pay telephones required to accommodate portable ***TTYs*** shall be equipped with a shelf and an electrical outlet within or adjacent to the telephone enclosure. The telephone handset shall be capable of being placed flush on the surface of the shelf. The shelf shall be capable of accommodating a ***TTY*** and shall have 6 inches (150 mm) minimum vertical clearance above the area where the ***TTY*** is to be placed.

705 Detectable Warnings

705.1 General. ***Detectable warnings*** shall consist of a surface of truncated domes and shall comply with 705.

705.1.1 Dome Size. Truncated domes in a ***detectable warning*** surface shall have a base diameter of 0.9 inch (23 mm) minimum and 1.4 inches (36 mm) maximum, a top diameter of 50 percent of the base diameter minimum to 65 percent of the base diameter maximum, and a height of 0.2 inch (5.1 mm).

705.1.2 Dome Spacing. Truncated domes in a ***detectable warning*** surface shall have a center-to-center spacing of 1.6 inches (41 mm) minimum and 2.4 inches (61 mm) maximum, and a base-to-base spacing of 0.65 inch (17 mm) minimum, measured between the most adjacent domes on a square grid.

705.1.3 Contrast. ***Detectable warning*** surfaces shall contrast visually with adjacent walking surfaces either light-on-dark, or dark-on-light.

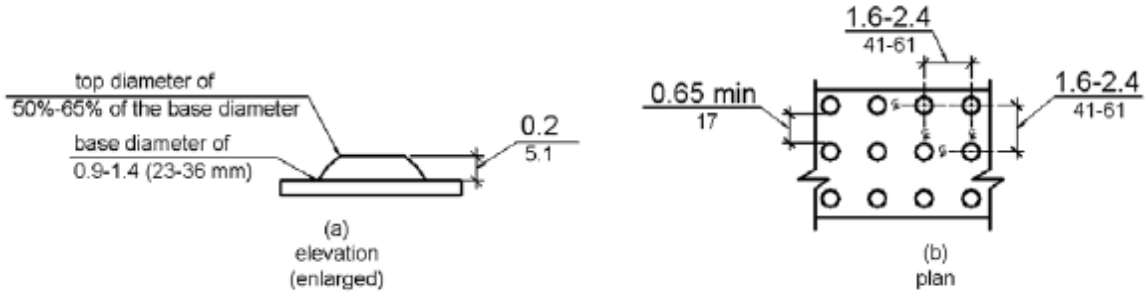

Figure 705.1 Size and Spacing of Truncated Domes

705.2 Platform Edges. ***Detectable warning*** surfaces at platform boarding edges shall be 24 inches (610 mm) wide and shall extend the full length of the ***public use*** areas of the platform.

706 Assistive Listening Systems

706.1 General. ***Assistive listening systems*** required in ***assembly areas*** shall comply with 706.

706.2 Receiver Jacks. Receivers required for use with an ***assistive listening system*** shall include a 1/8 inch (3.2 mm) standard mono jack.

706.3 Receiver Hearing-Aid Compatibility. Receivers required to be hearing-aid compatible shall interface with telecoils in hearing aids through the provision of neckloops.

706.4 Sound Pressure Level. ***Assistive listening systems*** shall be capable of providing a sound pressure level of 110 dB minimum and 118 dB maximum with a dynamic range on the volume control of 50 dB.

706.5 Signal-to-Noise Ratio. The signal-to-noise ratio for internally generated noise in ***assistive listening systems*** shall be 18 dB minimum.

706.6 Peak Clipping Level. Peak clipping shall not exceed 18 dB of clipping relative to the peaks of speech.

707 Automatic Teller Machines and Fare Machines

707.1 General. Automatic teller machines and fare machines shall comply with 707.

707.2 Clear Floor or Ground Space. A clear floor or ground space complying with 305 shall be provided.

EXCEPTION: Clear floor or ground space shall not be required at drive-up only automatic teller machines and fare machines.

707.3 Operable Parts. ***Operable parts*** shall comply with 309. Unless a clear or correct key is provided, each ***operable part*** shall be able to be differentiated by sound or touch, without activation.

EXCEPTION: Drive-up only automatic teller machines and fare machines shall not be required to comply with 309.2 and 309.3.

707.4 Privacy. Automatic teller machines shall provide the opportunity for the same degree of privacy of input and output available to all individuals.

707.5 Speech Output. Machines shall be speech enabled. Operating instructions and orientation, visible transaction prompts, user input verification, error messages, and all displayed information for full use shall be accessible to and independently usable by individuals with vision impairments. Speech shall be delivered through a mechanism that is readily available to all users, including but not limited to, an industry standard connector or a telephone handset. Speech shall be recorded or digitized human, or synthesized.

EXCEPTIONS:

1. Audible tones shall be permitted instead of speech for visible output that is not displayed for security purposes, including but not limited to, asterisks representing personal identification numbers.

2. Advertisements and other similar information shall not be required to be audible unless they convey information that can be used in the transaction being conducted.

3. Where speech synthesis cannot be supported, dynamic alphabetic output shall not be required to be audible.

707.5.1 User Control. Speech shall be capable of being repeated or interrupted. Volume control shall be provided for the speech function.

EXCEPTION: Speech output for any single function shall be permitted to be automatically interrupted when a transaction is selected.

707.5.2 Receipts. Where receipts are provided, speech output devices shall provide audible balance inquiry information, error messages, and all other information on the printed receipt necessary to complete or verify the transaction.

EXCEPTIONS:

1. Machine location, date and time of transaction, customer account number, and the machine identifier shall not be required to be audible.

2. Information on printed receipts that duplicates information available on-screen shall not be required to be presented in the form of an audible receipt.

3. Printed copies of bank statements and checks shall not be required to be audible.

707.6 Input. Input devices shall comply with 707.6.

707.6.1 Input Controls. At least one ***tactilely*** discernible input control shall be provided for each function. Where provided, key surfaces not on active areas of display screens, shall be raised above surrounding surfaces. Where membrane keys are the only method of input, each shall be ***tactilely*** discernable from surrounding surfaces and adjacent keys.

707.6.2 Numeric Keys. Numeric keys shall be arranged in a 12-key ascending or descending telephone keypad layout. The number five key shall be ***tactilely*** distinct from the other keys.

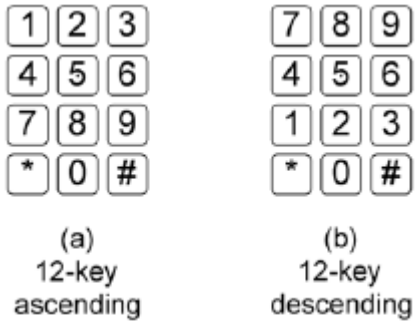

Figure 707.6.2 Numeric Key Layout

707.6.3 Function Keys. Function keys shall comply with 707.6.3.

707.6.3.1 Contrast. Function keys shall contrast visually from background surfaces. ***Characters*** and symbols on key surfaces shall contrast visually from key surfaces. Visual contrast shall be either light-on-dark or dark-on-light.

EXCEPTION: ***Tactile*** symbols required by 707.6.3.2 shall not be required to comply with 707.6.3.1.

707.6.3.2 Tactile Symbols. Function key surfaces shall have ***tactile*** symbols as follows: Enter or Proceed key: raised circle; Clear or Correct key: raised left arrow; Cancel key: raised letter ex; Add Value key: raised plus sign; Decrease Value key: raised minus sign.

707.7 Display Screen. The display screen shall comply with 707.7.

EXCEPTION: Drive-up only automatic teller machines and fare machines shall not be required to comply with 707.7.1.

707.7.1 Visibility. The display screen shall be visible from a point located 40 inches (1015 mm) above the center of the clear floor space in front of the machine.

707.7.2 Characters. ***Characters*** displayed on the screen shall be in a sans serif font. ***Characters*** shall be 3/16 inch (4.8 mm) high minimum based on the uppercase letter "I". ***Characters*** shall contrast with their background with either light ***characters*** on a dark background or dark ***characters*** on a light background.

707.8 Braille Instructions. Braille instructions for initiating the speech mode shall be provided. Braille shall comply with 703.3.

708 Two-Way Communication Systems

708.1 General. Two-way communication systems shall comply with 708.

708.2 Audible and Visual Indicators. The system shall provide both audible and visual signals.

708.3 Handsets. Handset cords, if provided, shall be 29 inches (735 mm) long minimum.

708.4 Residential Dwelling Unit Communication Systems. *In* ***residential dwelling units*** *required to comply with 809,* communications systems between a ***residential dwelling unit*** and a ***site***, ***building***, or floor ***entrance*** shall comply with 708.4.

708.4.1 Common Use or Public Use System Interface. The ***common use*** or ***public use*** system interface shall include the capability of supporting voice and ***TTY*** communication with the ***residential dwelling unit*** interface.

708.4.2 Residential Dwelling Unit Interface. The ***residential dwelling unit*** system interface shall include a telephone jack capable of supporting voice and ***TTY*** communication with the ***common use*** or ***public use*** system interface.

CHAPTER 8: SPECIAL ROOMS, SPACES AND ELEMENTS

801 General

801.1 Scope. The provisions of Chapter 8 shall apply where required by Chapter 2 or where referenced by a requirement in this document.

802 Wheelchair Spaces, Companion Seats, and Designated Aisle Seats

802.1 Wheelchair Spaces. ***Wheelchair spaces*** shall comply with 802.1.

802.1.1 Floor or Ground Surface. The floor or ground surface of ***wheelchair spaces*** shall comply with 302. Changes in level are not permitted.

EXCEPTION: Slopes not steeper than 1:48 shall be permitted.

802.1.2 Width. A single ***wheelchair space*** shall be 36 inches (915 mm) wide minimum. Where two adjacent ***wheelchair spaces*** are provided, each ***wheelchair space*** shall be 33 inches (840 mm) wide minimum.

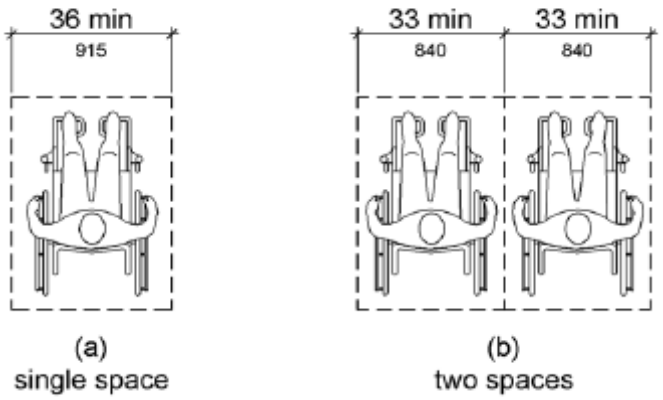

Figure 802.1.2 Width of Wheelchair Spaces in Assembly Areas

802.1.3 Depth. Where a ***wheelchair space*** can be entered from the front or rear, the ***wheelchair space*** shall be 48 inches (1220 mm) deep minimum. Where a ***wheelchair space*** can be entered only from the side, the ***wheelchair space*** shall be 60 inches (1525 mm) deep minimum.

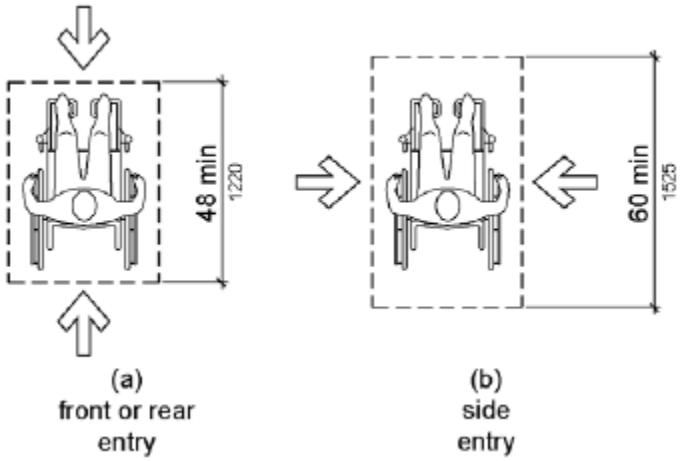

Figure 802.1.3 Depth of Wheelchair Spaces in Assembly Areas

802.1.4 Approach. ***Wheelchair spaces*** shall adjoin ***accessible routes***. ***Accessible routes*** shall not overlap ***wheelchair spaces***.

802.1.5 Overlap. ***Wheelchair spaces*** shall not overlap ***circulation paths***.

802.2 Lines of Sight. Lines of sight to the screen, performance area, or playing field for spectators in ***wheelchair spaces*** shall comply with 802.2.

802.2.1 Lines of Sight over Seated Spectators. Where spectators are expected to remain seated during events, spectators in ***wheelchair spaces*** shall be afforded lines of sight complying with 802.2.1.

802.2.1.1 Lines of Sight over Heads. Where spectators are provided lines of sight over the heads of spectators seated in the first row in front of their seats, spectators seated in ***wheelchair spaces*** shall be afforded lines of sight over the heads of seated spectators in the first row in front of ***wheelchair spaces***.

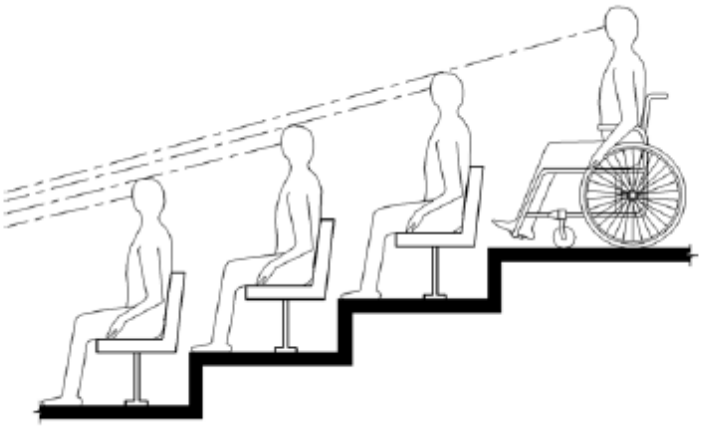

Figure 802.2.1.1 Lines of Sight over the Heads of Seated Spectators

802.2.1.2 Lines of Sight between Heads. Where spectators are provided lines of sight over the shoulders and between the heads of spectators seated in the first row in front of their seats, spectators seated in ***wheelchair spaces*** shall be afforded lines of sight over the shoulders and between the heads of seated spectators in the first row in front of ***wheelchair spaces***.

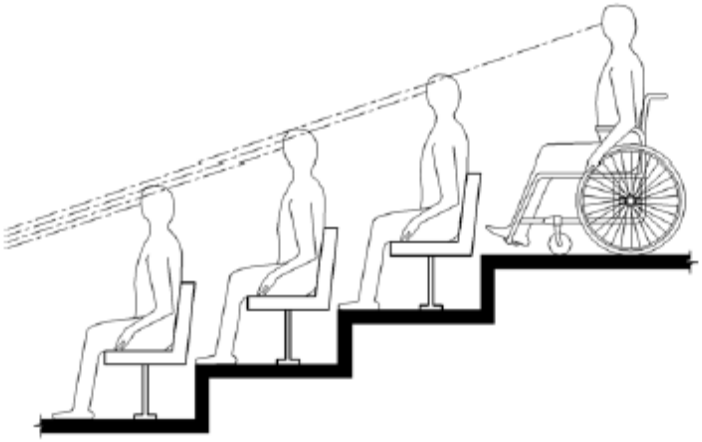

Figure 802.2.1.2 Lines of Sight between the Heads of Seated Spectators

802.2.2 Lines of Sight over Standing Spectators. Where spectators are expected to stand during events, spectators in ***wheelchair spaces*** shall be afforded lines of sight complying with 802.2.2.

802.2.2.1 Lines of Sight over Heads. Where standing spectators are provided lines of sight over the heads of spectators standing in the first row in front of their seats, spectators seated in ***wheelchair spaces*** shall be afforded lines of sight over the heads of standing spectators in the first row in front of ***wheelchair spaces***.

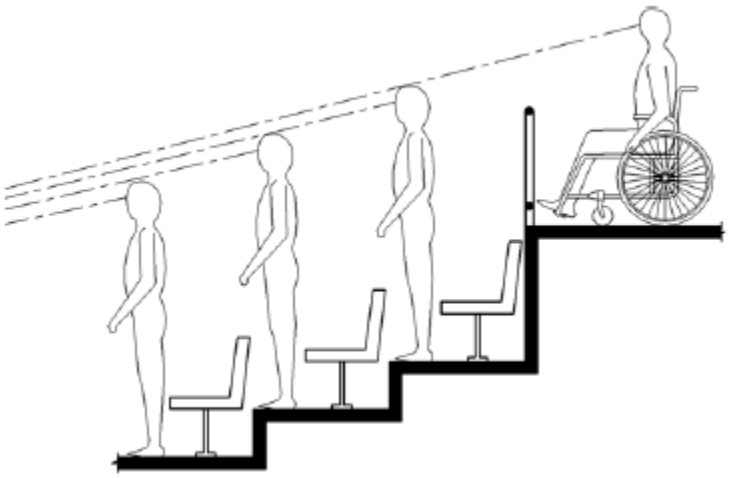

Figure 802.2.2.1 Lines of Sight over the Heads of Standing Spectators

802.2.2.2 Lines of Sight between Heads. Where standing spectators are provided lines of sight over the shoulders and between the heads of spectators standing in the first row in front of their seats, spectators seated in ***wheelchair spaces*** shall be afforded lines of sight over the shoulders and between the heads of standing spectators in the first row in front of ***wheelchair spaces***.

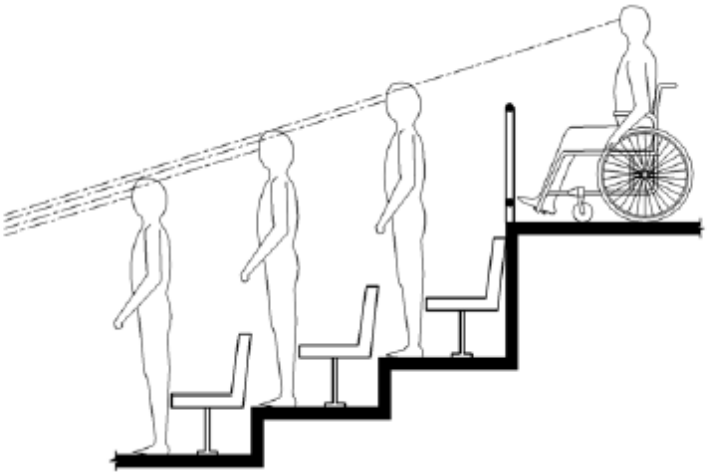

Figure 802.2.2.2 Lines of Sight between the Heads of Standing Spectators

802.3 Companion Seats. Companion seats shall comply with 802.3.

802.3.1 Alignment. In row seating, companion seats shall be located to provide shoulder alignment with adjacent ***wheelchair spaces***. The shoulder alignment point of the ***wheelchair space*** shall be measured 36 inches (915 mm) from the front of the ***wheelchair space***. The floor surface of the companion seat shall be at the same elevation as the floor surface of the ***wheelchair spaces***.

802.3.2 Type. Companion seats shall be equivalent in size, quality, comfort, and amenities to the seating in the immediate area. Companion seats shall be permitted to be movable.

802.4 Designated Aisle Seats. Designated aisle seats shall comply with 802.4.

802.4.1 Armrests. Where armrests are provided on the seating in the immediate area, folding or retractable armrests shall be provided on the aisle side of the seat.

802.4.2 Identification. Each designated aisle seat shall be identified by a sign or marker.

803 Dressing, Fitting, and Locker Rooms

803.1 General. Dressing, fitting, and locker rooms shall comply with 803.

803.2 Turning Space. Turning space complying with 304 shall be provided within the room.

803.3 Door Swing. Doors shall not swing into the room unless a clear floor or ground space complying with 305.3 is provided beyond the arc of the door swing.

803.4 Benches. A bench complying with 903 shall be provided within the room.

803.5 Coat Hooks and Shelves. Coat hooks *and shelves* provided within the room shall be located within one of the reach ranges specified in 308. Shelves shall be 40 inches (1015 mm) minimum and 48 inches (1220 mm) maximum above the finish floor or ground.

803.6 Mirrors. *Mirrors provided within the room shall be installed with the bottom edge of the reflecting surface 35 inches (890 mm) maximum above the finish floor or ground.*

804 Kitchens and Kitchenettes

804.1 General. Kitchens and kitchenettes shall comply with 804.

804.2 Clearance. Where a pass through kitchen is provided, clearances shall comply with 804.2.1. Where a U-shaped kitchen is provided, clearances shall comply with 804.2.2.

EXCEPTION: ***Spaces*** that do not provide a cooktop or conventional range shall not be required to comply with 804.2.

804.2.1 Pass-Through Kitchen. In pass through kitchens where counters, appliances or cabinets are on two opposing sides, or where counters, appliances or cabinets are opposite a parallel wall, clearance between all opposing base cabinets, counter tops, appliances, or walls within kitchen work areas shall be 40 inches (1015 mm) minimum. Pass through kitchens shall have two entries.

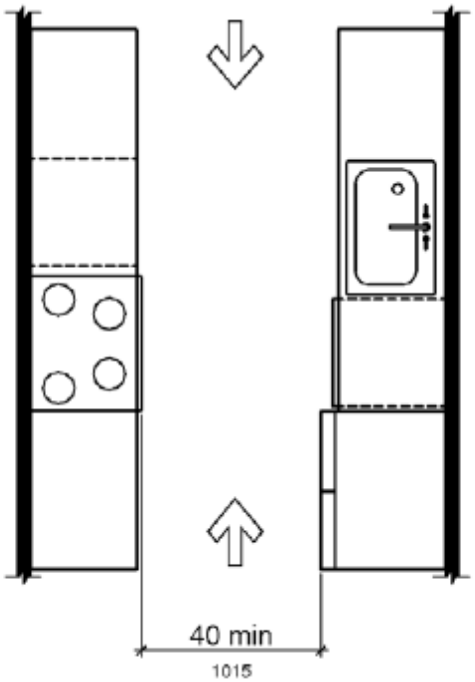

Figure 804.2.1 Pass-Through Kitchens

804.2.2 U-Shaped. In U-shaped kitchens enclosed on three contiguous sides, clearance between all opposing base cabinets, counter tops, appliances, or walls within kitchen work areas shall be 60 inches (1525 mm) minimum.

EXCEPTION: *In* ***dwelling units*** *in* ***multi-story housing*** *required to comply with 812, where there is no appliance or counter top at the base of the U (see 804.2.2 (b)) and counters provide the knee clearances specified in 306, clearances between those counters and all opposing base cabinets, countertops, appliances, or walls in kitchens shall be 40 inches (1015 mm) minimum.*

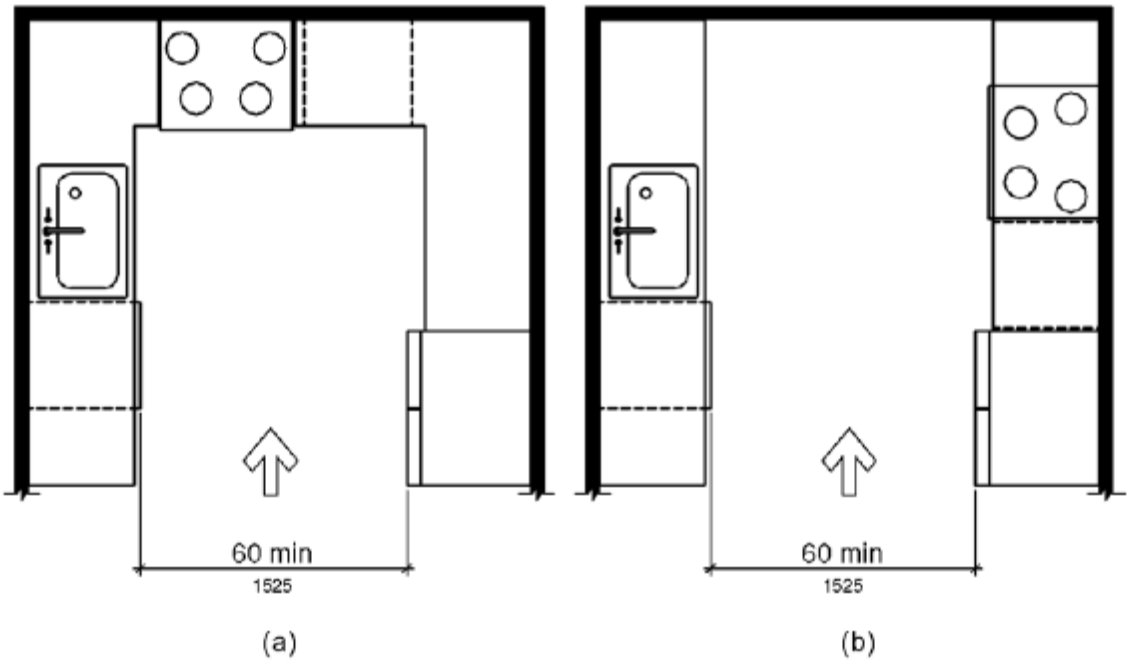

Figure 804.2.2 U-Shaped Kitchens

804.3 Kitchen Work Surface. In ***residential dwelling units*** required to comply with 809, at least one 30 inches (760 mm) wide minimum section of counter shall provide a kitchen work surface that complies with 804.3.

804.3.1 Clear Floor or Ground Space. A clear floor space complying with 305 positioned for a forward approach shall be provided. The clear floor or ground space shall be centered on the kitchen work surface and shall provide knee and toe clearance complying with 306.

EXCEPTION: Cabinetry shall be permitted under the kitchen work surface provided that all of the following conditions are met:

(a) the cabinetry can be removed without removal or replacement of the kitchen work surface;

(b) the finish floor extends under the cabinetry; and

(c) the walls behind and surrounding the cabinetry are finished.

804.3.2 Height. The kitchen work surface shall be 34 inches (865 mm) maximum above the finish floor or ground.

EXCEPTION: A counter that is adjustable to provide a kitchen work surface at variable heights, 29 inches (735 mm) minimum and 36 inches (915 mm) maximum, shall be permitted.

804.3.3 Exposed Surfaces. There shall be no sharp or abrasive surfaces under the work surface counters.

804.4 Sinks. Sinks shall comply with 606.

804.5 Storage. At least 50 percent of shelf space in storage ***facilities*** shall comply with 811.

804.6 Appliances. Where provided, kitchen appliances shall comply with 804.6.

804.6.1 Clear Floor or Ground Space. A clear floor or ground space complying with 305 shall be provided at each kitchen appliance. Clear floor or ground spaces shall be permitted to overlap.

804.6.2 Operable Parts. All appliance controls shall comply with 309.

EXCEPTIONS:

1. Appliance doors and door latching devices shall not be required to comply with 309.4.

2. Bottom-hinged appliance doors, when in the open position, shall not be required to comply with 309.3.

804.6.3 Dishwasher. Clear floor or ground space shall be positioned adjacent to the dishwasher door. The dishwasher door, in the open position, shall not obstruct the clear floor or ground space for the dishwasher or the sink.

804.6.4 Range or Cooktop. Where a forward approach is provided, the clear floor or ground space shall provide knee and toe clearance complying with 306. Where knee and toe space is provided, the underside of the range or cooktop shall be insulated or otherwise configured to prevent burns, abrasions, or electrical shock. The location of controls shall not require reaching across burners.

804.6.5 Oven. Ovens shall comply with 804.6.5.

804.6.5.1 Side-Hinged Door Ovens. Side-hinged door ovens shall have the work surface required by 804.3 positioned adjacent to the latch side of the oven door.

804.6.5.2 Bottom-Hinged Door Ovens. Bottom-hinged door ovens shall have the work surface required by 804.3 positioned adjacent to one side of the door.

804.6.5.3 Controls. Ovens shall have controls on front panels.

804.6.6 Refrigerator/Freezer. Combination refrigerators and freezers shall have at least 50 percent of the freezer space 54 inches (1370 mm) maximum above the finish floor or ground. The clear floor or ground space shall be positioned for a parallel approach to the space dedicated to a refrigerator/freezer with the centerline of the clear floor or ground space offset 24 inches (610 mm) maximum from the centerline of the dedicated space.

805 Medical Care and Long-Term Care Facilities

805.1 General. Medical care ***facility*** and long-term care ***facility*** patient or resident sleeping rooms required to provide mobility features shall comply with 805.

805.2 Turning Space. Turning space complying with 304 shall be provided within the room.

805.3 Clear Floor or Ground Space. A clear floor space complying with 305 shall be provided on each side of the bed. The clear floor space shall be positioned for parallel approach to the side of the bed.

805.4 Toilet and Bathing Rooms. Toilet and bathing rooms that are provided as part of a patient or resident sleeping room shall comply with 603. Where provided, no fewer than one water closet, one lavatory, and one bathtub or shower shall comply with the applicable requirements of 603 through 610.

806 Transient Lodging Guest Rooms

806.1 General. ***Transient lodging*** guest rooms shall comply with 806. Guest rooms required to provide mobility features shall comply with 806.2. Guest rooms required to provide communication features shall comply with 806.3.

806.2 Guest Rooms with Mobility Features. Guest rooms required to provide mobility features shall comply with 806.2.

806.2.1 Living and Dining Areas. Living and dining areas shall be accessible.

806.2.2 Exterior Spaces. Exterior ***spaces***, including patios, terraces and balconies that serve the guest room shall be accessible.

806.2.3 Sleeping Areas. At least one sleeping area shall provide a clear floor space complying with 305 on both sides of a bed. The clear floor space shall be positioned for parallel approach to the side of the bed.

EXCEPTION: Where a single clear floor space complying with 305 positioned for parallel approach is provided between two beds, a clear floor or ground space shall not be required on both sides of a bed.

806.2.4 Toilet and Bathing Facilities. At least one bathroom that is provided as part of a guest room shall comply with 603. No fewer than one water closet, one lavatory, and one bathtub or shower shall comply with applicable requirements of 603 through 610. In addition, required roll-in shower compartments shall comply with 608.2.2 or 608.2.3. Toilet and bathing fixtures required to comply with 603 through 610 shall be permitted to be located in more than one toilet or bathing area, provided that travel between fixtures does not require travel between other parts of the guest room.

806.2.4.1 Vanity Counter Top Space. If vanity counter top space is provided in non-accessible guest toilet or bathing rooms, equivalent vanity counter top space, in terms of size and proximity to the lavatory, shall also be provided in accessible guest toilet or bathing rooms.

806.2.5 Kitchens and Kitchenettes. Kitchens and kitchenettes shall comply with 804.

806.2.6 Turning Space. Turning space complying with 304 shall be provided within the guest room.

806.3 Guest Rooms with Communication Features. Guest rooms required to provide communication features shall comply with 806.3.

806.3.1 Alarms. Where ***emergency warning systems*** are provided, alarms complying with 702 shall be provided.

806.3.2 Notification Devices. Visible notification devices shall be provided to alert room occupants of incoming telephone calls and a door knock or bell. Notification devices shall not be connected to visible alarm signal appliances. Telephones shall have volume controls compatible

with the telephone system and shall comply with 704.3. Telephones shall be served by an electrical outlet complying with 309 located within 48 inches (1220 mm) of the telephone to facilitate the use of a ***TTY***.

807 Holding Cells and Housing Cells

807.1 General. Holding cells and housing cells shall comply with 807.

807.2 Cells with Mobility Features. Cells required to provide mobility features shall comply with 807.2.

807.2.1 Turning Space. Turning space complying with 304 shall be provided within the cell.

807.2.2 Benches. Where benches are provided, at least one bench shall comply with 903.

807.2.3 Beds. Where beds are provided, clear floor space complying with 305 shall be provided on at least one side of the bed. The clear floor space shall be positioned for parallel approach to the side of the bed.

807.2.4 Toilet and Bathing Facilities. Toilet ***facilities*** or bathing ***facilities*** that are provided as part of a cell shall comply with 603. Where provided, no fewer than one water closet, one lavatory, and one bathtub or shower shall comply with the applicable requirements of 603 through 610.

807.3 Cells with Communication Features. Cells required to provide communication features shall comply with 807.3.

807.3.1 Alarms. Where audible emergency alarm systems are provided to serve the occupants of cells, visible alarms complying with 702 shall be provided.

EXCEPTION: Visible alarms shall not be required where inmates or detainees are not allowed independent means of egress.

807.3.2 Telephones. Telephones, where provided within cells, shall have volume controls complying with 704.3.

808 Courtrooms

808.1 General. Courtrooms shall comply with 808.

808.2 Turning Space. Where provided, areas that are raised or depressed and accessed by ***ramps*** or platform lifts with entry ***ramps*** shall provide unobstructed turning space complying with 304.

808.3 Clear Floor Space. Each jury box and witness stand shall have, within its defined area, clear floor space complying with 305.

EXCEPTION: In ***alterations***, ***wheelchair spaces*** are not required to be located within the defined area of raised jury boxes or witness stands and shall be permitted to be located outside these spaces where ***ramp*** or platform lift access poses a hazard by restricting or projecting into a means of egress required by the appropriate ***administrative authority***.

808.4 Judges' Benches and Courtroom Stations. Judges' benches, clerks' stations, bailiffs' stations, deputy clerks' stations, court reporters' stations, and litigants' and counsel stations shall comply with 902.

809 Residential Dwelling Units

809.1 General. ***Residential dwelling units*** *required by 233.2, 233.3 and 233.4* shall comply with 809. ***Residential dwelling units*** required to provide mobility features shall comply with 809.2 through 809.4. ***Residential dwelling units*** required to provide communication features shall comply with 809.5. ***Dwelling units*** *in* ***multi-story housing*** *required by 233.6 shall comply with 812.*

809.2 Accessible Routes. ***Accessible routes*** complying with Chapter 4 shall be provided within ***residential dwelling units*** in accordance with 809.2.

EXCEPTION: ***Accessible routes*** shall not be required to or within unfinished attics or unfinished basements.

809.2.1 Location. At least one ***accessible route*** shall connect all ***spaces*** and ***elements*** which are a part of the ***residential dwelling units***. Where only one ***accessible route*** is provided, it shall not pass through bathrooms, closets, or similar ***spaces***.

809.2.2 Turning Space. All rooms served by an ***accessible route*** shall provide a turning space complying with 304.

EXCEPTION: Turning space shall not be required in exterior ***spaces*** 30 inches (760 mm) maximum in depth or width.

809.3 Kitchen. Where a kitchen is provided, it shall comply with 804.

809.4 Toilet Facilities and Bathing Facilities. At least one bathroom shall comply with 603. No fewer than one of each type of fixture provided shall comply with applicable requirements of 603 through 610. Toilet and bathing fixtures required to comply with 603 through 610 shall be located in the same toilet and bathing area, such that travel between fixtures does not require travel between other parts of the ***residential dwelling units***.

809.5 Residential Dwelling Units with Communication Features. ***Residential dwelling units*** required to provide communication features shall comply with 809.5.

809.5.1 Building Fire Alarm System. Where a ***building*** fire alarm system is provided, the system wiring shall be extended to a point within the ***residential dwelling units*** in the vicinity of the ***residential dwelling unit*** smoke detection system.

809.5.1.1 Alarm Appliances. Where alarm appliances are provided within a ***residential dwelling unit*** as part of the ***building*** fire alarm system, they shall comply with 702.

809.5.1.2 Activation. All visible alarm appliances provided within the ***residential dwelling unit*** for ***building*** fire alarm notification shall be activated upon activation of the ***building*** fire alarm in the portion of the ***building*** containing the ***residential dwelling unit***.

809.5.2 Residential Dwelling Unit Smoke Detection System. ***Residential dwelling unit*** smoke detection systems shall comply with NFPA 72 (2013 edition) (incorporated by reference, see 105 Referenced Standards in Chapter 1).

809.5.2.1 Activation. All visible alarm appliances provided within the ***residential dwelling unit*** for smoke detection notification shall be activated upon smoke detection.

809.5.3 Interconnection. The same visible alarm appliances shall be permitted to provide notification of ***residential dwelling unit*** smoke detection and ***building*** fire alarm activation.

809.5.4 Prohibited Use. Visible alarm appliances used to indicate ***residential dwelling unit*** smoke detection or ***building*** fire alarm activation shall not be used for any other purpose within the ***residential dwelling unit***.

809.5.5 Residential Dwelling Unit Primary Entrance. Communication features shall be provided at the ***residential dwelling unit*** primary ***entrance*** complying with 809.5.5.

809.5.5.1 Notification. A hard-wired electric doorbell shall be provided. A button or switch shall be provided outside the ***residential dwelling unit*** primary ***entrance***. Activation of the button or switch shall initiate an audible tone and visible signal within the ***residential dwelling unit***. Where visible doorbell signals are located in sleeping areas, they shall have controls to deactivate the signal.

809.5.5.2 Identification. A means for visually identifying a visitor without opening the ***residential dwelling unit*** entry door shall be provided and shall allow for a minimum 180 degree range of view.

809.5.6 Site, Building, or Floor Entrance. Where a system, including a closed-circuit system, permitting voice communication between a visitor and the occupant of the ***residential dwelling unit*** is provided, the system shall comply with 708.4.

810 Transportation Facilities

810.1 General. Transportation ***facilities*** shall comply with 810.

810.2 Bus Boarding and Alighting Areas. Bus boarding and alighting areas shall comply with 810.2.

810.2.1 Surface. Bus stop boarding and alighting areas shall have a firm, stable, *and slip resistant* surface.

810.2.2 Dimensions. Bus stop boarding and alighting areas shall provide a clear length of 96 inches (2440 mm) minimum, measured perpendicular to the curb or vehicle roadway edge, and a clear width of 60 inches (1525 mm) minimum, measured parallel to the vehicle roadway.

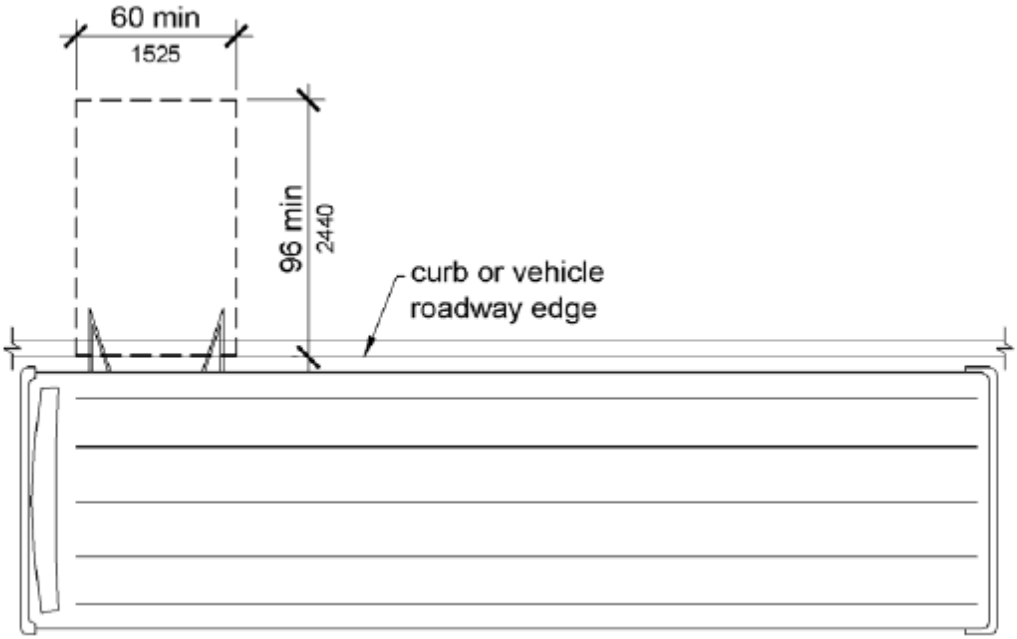

Figure 810.2.2 Dimensions of Bus Boarding and Alighting Areas

810.2.3 Connection. Bus stop boarding and alighting areas shall be connected to streets, sidewalks, or pedestrian paths by an ***accessible route*** complying with 402.

810.2.4 Slope. Parallel to the roadway, the slope of the bus stop boarding and alighting area shall be the same as the roadway, to the maximum extent practicable. Perpendicular to the roadway, the slope of the bus stop boarding and alighting area shall not be steeper than 1:48.

810.3 Bus Shelters. Bus shelters shall provide a minimum clear floor or ground space complying with 305 entirely within the shelter. Bus shelters shall be connected by an ***accessible route*** complying with 402 to a boarding and alighting area complying with 810.2. *Where seating is provided within transit shelters, the clear space shall be located either at one end of a seat or shall not overlap the area within 18 inches (460 mm) from the front edge of the seat. Environmental controls within transit shelters shall be proximity-actuated. Protruding objects within transit shelters shall comply with 307.*

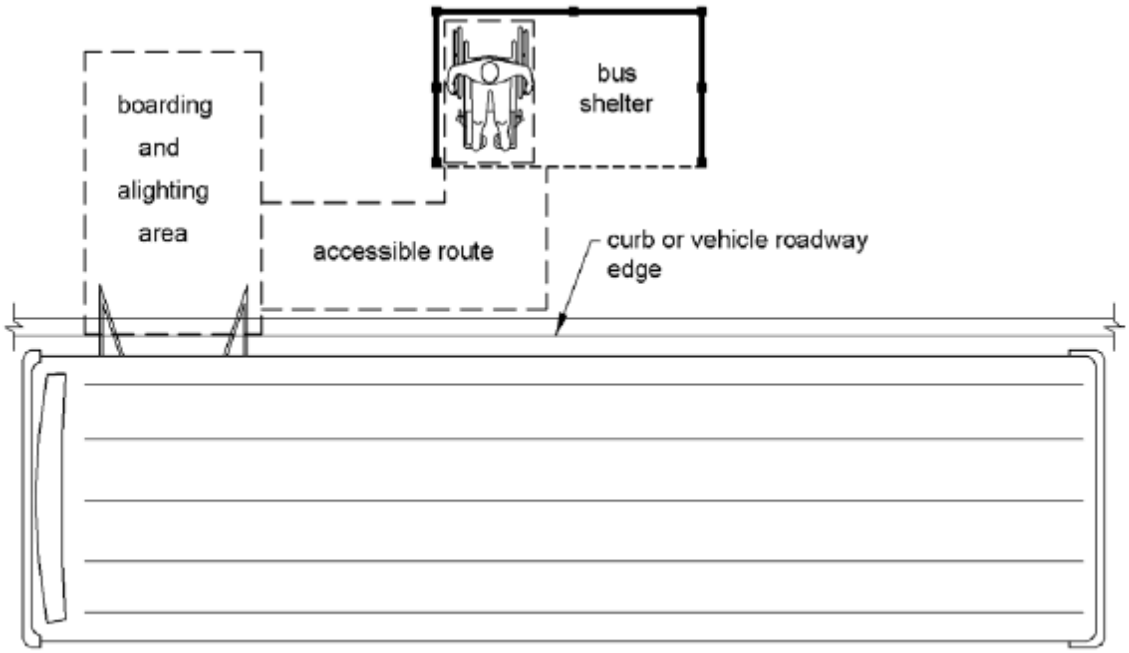

Figure 810.3 Bus Shelters

810.4 Bus Signs. Bus route identification signs shall comply with 703.5.1 through 703.5.4, and 703.5.7 and 703.5.8. In addition, to the maximum extent practicable, bus route identification signs shall comply with 703.5.5.

EXCEPTION: Bus schedules, timetables and maps that are posted at the bus stop or bus bay shall not be required to comply.

810.5 Rail Platforms. Rail platforms shall comply with 810.5.

810.5.1 Slope. Rail platforms shall not exceed a slope of 1:48 in all directions.

EXCEPTION: Where platforms serve vehicles operating on existing track or track laid in existing roadway, the slope of the platform parallel to the track shall be permitted to be equal to the slope (grade) of the roadway or existing track.

810.5.2 Detectable Warnings. ***Detectable warnings*** *complying with 705 shall be provided at the following areas:*

1. Platform boarding edges not protected by platform screens or guards shall have ***detectable warnings*** complying with 705 along the full length of the ***public use*** area of the platform.
2. *Pedestrian at-grade rail crossings not located within a street or highway.*
3. *Boarding and alighting areas at sidewalk or street level transit stops for rail vehicles where the side of the boarding and alighting areas facing the rail vehicles is not protected by screens or guards.*

810.5.3 Platform and Vehicle Floor Coordination. Station platforms shall be positioned to coordinate with vehicles in accordance with *the applicable requirements of the federal regulation found at **36 CFR 1192***. Low-level platforms shall be 8 inches (205 mm) minimum above top of rail. *In light rail, commuter rail, and intercity rail systems where it is not operationally or structurally feasible to meet the horizontal gap or vertical difference requirements of part 1192 or **49 CFR 38**, mini-high platforms, car-borne or platform-mounted lifts, **ramps** or bridge plates or similarly manually deployed devices, meeting the requirements of **49 CFR 38**, shall suffice.*

EXCEPTION: Where vehicles are boarded from sidewalks or street-level, low-level platforms shall be permitted to be less than 8 inches (205 mm).

810.6 Rail Station Signs. Rail station signs shall comply with 810.6.

EXCEPTION. Signs shall not be required to comply with 810.6.1 and 810.6.2 where audible signs are remotely transmitted to hand-held receivers, or are user- or proximity-actuated.

810.6.1 Entrances. Where signs identify a station or its ***entrance***, at least one sign at each ***entrance*** shall comply with 703.2 and shall be placed in uniform locations to the maximum extent practicable. Where signs identify a station that has no defined ***entrance***, at least one sign shall comply with 703.2 and shall be placed in a central location.

810.6.2 Routes and Destinations. Lists of stations, routes and destinations served by the station which are located on boarding areas, platforms, or ***mezzanines*** shall comply with 703.5. At least one ***tactile*** sign identifying the specific station and complying with 703.2 shall be provided on each platform or boarding area. Signs covered by this requirement shall, to the maximum extent practicable, be placed in uniform locations within the system.

EXCEPTION: Where sign space is limited, ***characters*** shall not be required to exceed 3 inches (75 mm).

810.6.3 Station Names. Stations covered by this section shall have identification signs complying with 703.5. Signs shall be clearly visible and within the sight lines of standing and sitting passengers from within the vehicle on both sides when not obstructed by another vehicle.

810.7 Public Address Systems. Where public address systems convey audible information to the ***public***, the same or equivalent information shall be provided in a visual format.

810.8 Clocks. Where clocks are provided for use by the ***public***, the clock face shall be uncluttered so that its ***elements*** are clearly visible. Hands, numerals and digits shall contrast with the background either light-on-dark or dark-on-light. Where clocks are installed overhead, numerals and digits shall comply with 703.5.

810.9 Escalators. Where provided, escalators shall comply with the sections 6.1.3.5.6 and 6.1.3.6.5 of ASME A17.1 (incorporated by reference, see "Referenced Standards" in Chapter 1) and shall have a clear width of 32 inches (815 mm) minimum.

EXCEPTION: Existing escalators in ***key stations*** shall not be required to comply with 810.9.

810.10 Track Crossings. Where a ***circulation path*** serving boarding platforms crosses tracks, it shall comply with 402.

EXCEPTION: Openings for wheel flanges shall be permitted to be 2 1/2 inches (64 mm) maximum.

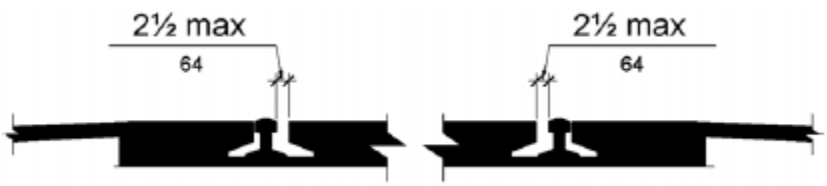

Figure 810.10 (Exception) Track Crossings

811 Storage

811.1 General. Storage shall comply with 811.

811.2 Clear Floor or Ground Space. A clear floor or ground space complying with 305 shall be provided.

811.3 Height. Storage ***elements*** shall comply with at least one of the reach ranges specified in 308.

811.4 Operable Parts. ***Operable parts*** shall comply with 309.

812 Dwelling Units in Multi-Story Housing

812.1 General. Dwelling units *required by 233.6 in* ***multi-story housing*** *shall comply with 812.*

812.2 Adaptability. *812.3 and 812.4 specify a range of heights and clearances within which certain fixtures may be installed (for example, grab bars at bathtubs and water closets, and work surfaces and sink heights in kitchens). In the case of grab bars, provision can be made for later installation within the specified height range, as requested by the occupant of the* ***dwelling unit****. Other fixtures may be permanently installed at a height within these ranges, or the fixtures may be adjustable within the ranges. A unit in which fixtures may be added or adjusted in height is an* ***adaptable dwelling unit****. Both* ***adaptable dwelling units*** *and units in which fixtures are permanently installed within the heights specified in this section are accessible* ***dwelling units****.*

812.3 Bathrooms. *Bathrooms shall be on an* ***accessible route*** *and shall comply with 812.3.1 through 812.3.5.*

812.3.1 Clearances. *Clearances shall comply with 603.2.*

812.3.2 Water Closets. *Water closets shall comply with 604.2 through 604.7.*

812.3.3 Lavatories, Mirrors and Medicine Cabinets. *If lavatories, mirrors and medicine cabinets are provided, at least one of each shall comply with 812.3.3.1 through 812.3.3.3.*

812.3.3.1 Lavatory. *The lavatory shall comply with 606.*

812.3.3.2 Mirrors. *Mirrors shall comply with 603.3.*

812.3.3.3 Medicine Cabinet. *The medicine cabinet shall have a usable shelf complying with 309.*

812.3.4 Bathtubs. *Bathtubs shall comply with 607.*

812.3.5 Showers. *If a shower is provided, a transfer type shower compartment complying with 608.2.1 or a standard roll-in shower compartment complying with 608.2.2 or an*

alternate roll-in type shower compartment complying with 608.2.3 shall be provided. Showers shall comply with 608.3 through 608.8.

EXCEPTION: A seat, or reinforcement for a seat, shall not be required in the roll-in shower compartment.

812.4 Kitchens. *Kitchens and their components shall be on an* ***accessible route*** *and shall comply with 804.2 through 804.4, 804.6.1 through 804.6.4 and 804.6.6.*

812.4.1 Kitchen Storage. *At least 5%, but not less than one, of each type of cabinet, drawer, and shelf storage area shall comply with 812.4.1.1 through 812.4.1.3.*

812.4.2 Ovens shall be of the self-cleaning type or be located adjacent to an adjustable height counter with knee and toe clearance complying with 306. For side-opening ovens, the door latch side shall be next to the open counter space, and there shall be a pull-out shelf under the oven extending the fill width of the oven and pulling out not less than 10 inches (255 mm) when fully extended. Ovens shall have controls on front panels. Oven controls are permitted to be located on either side of the door.

812.4.1.1 Clear Floor Space. *A clear floor space complying with 305 shall be provided at each accessible storage area.*

812.4.1.2 Height. *Accessible storage areas shall be within at least one of the reach ranges specified in 308. At least one shelf of all cabinets and storage shelves mounted above counters shall be mounted at 48 inches (1220 mm) maximum above the floor.*

812.4.1.3 Hardware. *Hardware for accessible storage* ***facilities*** *shall comply with 309.4. Door pulls or handles for wall cabinets shall be mounted as close to the bottom of cabinet doors as possible. Door pulls or handles for base cabinets shall be mounted as close to the top of cabinet doors as possible.*

812.5 Laundry Facilities. *Laundry equipment provided within individual accessible* ***dwelling units****, and separate laundry* ***facilities*** *that serve one or more accessible* ***dwelling units****, shall comply with 611.*

CHAPTER 9: BUILT-IN ELEMENTS

901 General

901.1 Scope. The provisions of Chapter 9 shall apply where required by Chapter 2 or where referenced by a requirement in this document.

902 Dining Surfaces and Work Surfaces

902.1 General. Dining surfaces and work surfaces shall comply with 902.2 and 902.3.

EXCEPTION: Dining surfaces and work surfaces for ***children's use*** shall be permitted to comply with 902.4.

902.2 Clear Floor or Ground Space. A clear floor space complying with 305 positioned for a forward approach shall be provided. Knee and toe clearance complying with 306 shall be provided.

902.3 Height. The tops of dining surfaces and work surfaces shall be 28 inches (710 mm) minimum and 34 inches (865 mm) maximum above the finish floor or ground.

902.4 Dining Surfaces and Work Surfaces for Children's Use. Accessible dining surfaces and work surfaces for ***children's use*** shall comply with 902.4.

EXCEPTION: Dining surfaces and work surfaces that are used primarily by children 5 years and younger shall not be required to comply with 902.4 where a clear floor or ground space complying with 305 positioned for a parallel approach is provided.

902.4.1 Clear Floor or Ground Space. A clear floor space complying with 305 positioned for forward approach shall be provided. Knee and toe clearance complying with 306 shall be provided, except that knee clearance 24 inches (610 mm) minimum above the finish floor or ground shall be permitted.

902.4.2 Height. The tops of tables and counters shall be 26 inches (660 mm) minimum and 30 inches (760 mm) maximum above the finish floor or ground.

903 Benches

903.1 General. Benches shall comply with 903.

903.2 Clear Floor or Ground Space. Clear floor or ground space complying with 305 shall be provided and shall be positioned at the end of the bench seat and parallel to the short axis of the bench.

903.3 Size. Benches shall have seats that are 42 inches (1065 mm) long minimum and 20 inches (510 mm) deep minimum and 24 inches (610 mm) deep maximum.

903.4 Back Support. The bench shall provide for back support or shall be affixed to a wall. Back support shall be 42 inches (1065 mm) long minimum and shall extend from a point 2 inches (51 mm) maximum above the seat surface to a point 18 inches (455 mm) minimum above the seat surface. Back support shall be 2 1/2 inches (64 mm) maximum from the rear edge of the seat measured horizontally.

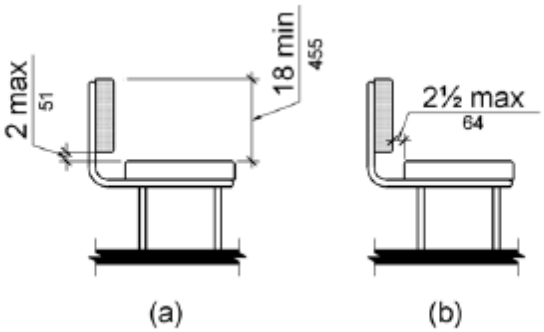

Figure 903.4 Bench Back Support

903.5 Height. The top of the bench seat surface shall be 17 inches (430 mm) minimum and 19 inches (485 mm) maximum above the finish floor or ground.

903.6 Structural Strength. Allowable stresses shall not be exceeded for materials used when a vertical or horizontal force of 250 pounds (1112 N) is applied at any point on the seat, fastener, mounting device, or supporting structure.

903.7 Wet Locations. Where installed in wet locations, the surface of the seat shall be slip resistant and shall not accumulate water.

904 Check-Out Aisles and Sales and Service Counters

904.1 General. Check-out aisles and sales and service counters shall comply with the applicable requirements of 904.

904.2 Approach. All portions of counters required to comply with 904 shall be located adjacent to a walking surface complying with 403.

904.3 Check-Out Aisles. Check-out aisles shall comply with 904.3.

904.3.1 Aisle. Aisles shall comply with 403.

904.3.2 Counter. The counter surface height shall be 38 inches (965 mm) maximum above the finish floor or ground. The top of the counter edge protection shall be 2 inches (51 mm) maximum above the top of the counter surface on the aisle side of the check-out counter.

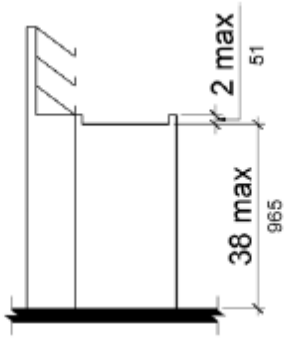

Figure 904.3.2 Check-Out Aisle Counters

904.3.3 Check Writing Surfaces. Where provided, check writing surfaces shall comply with 902.3.

904.4 Sales and Service Counters. Sales counters and service counters shall comply with 904.4.1 or 904.4.2. The accessible portion of the counter top shall extend the same depth as the sales or service counter top.

EXCEPTION: In ***alterations***, when the provision of a counter complying with 904.4 would result in a reduction of the number of existing counters at work stations or a reduction of the number of existing ***mail boxes***, the counter shall be permitted to have a portion which is 24 inches (610 mm) long minimum complying with 904.4.1 provided that the required clear floor or ground space is centered on the accessible length of the counter.

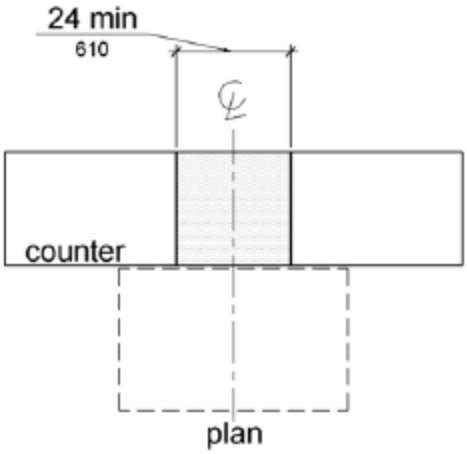

Figure 904.4 (Exception) Alteration of Sales and Service Counters

904.4.1 Parallel Approach. A portion of the counter surface that is 36 inches (915 mm) long minimum and 36 inches (915 mm) high maximum above the finish floor shall be provided. A clear floor or ground space complying with 305 shall be positioned for a parallel approach adjacent to the 36 inch (915 mm) minimum length of counter.

EXCEPTION: Where the provided counter surface is less than 36 inches (915 mm) long, the entire counter surface shall be 36 inches (915 mm) high maximum above the finish floor.

904.4.2 Forward Approach. A portion of the counter surface that is 30 inches (760 mm) long minimum and 36 inches (915 mm) high maximum shall be provided. Knee and toe space complying with 306 shall be provided under the counter. A clear floor or ground space complying with 305 shall be positioned for a forward approach to the counter.

904.5 Food Service Lines. Counters in food service lines shall comply with 904.5.

904.5.1 Self-Service Shelves and Dispensing Devices. Self-service shelves and dispensing devices for tableware, dishware, condiments, food and beverages shall comply with 308.

904.5.2 Tray Slides. The tops of tray slides shall be 28 inches (710 mm) minimum and 34 inches (865 mm) maximum above the finish floor or ground.

904.6 Security Glazing. Where counters or teller windows have security glazing to separate personnel from the ***public***, a method to facilitate voice communication shall be provided. Telephone handset devices, if provided, shall comply with 704.3.

CAPITAL DEVELOPMENT BOARD

NOTICE OF ADOPTED RULES

CHAPTER 10: RECREATION FACILITIES

1001 General

1001.1 Scope. The provisions of Chapter 10 shall apply where required by Chapter 2 or where referenced by a requirement in this document.

1002 Amusement Rides

1002.1 General. ***Amusement rides*** shall comply with 1002.

1002.2 Accessible Routes. ***Accessible routes*** serving ***amusement rides*** shall comply with Chapter 4.

EXCEPTIONS:

1. In load or unload areas and on ***amusement rides***, where compliance with 405.2 is not structurally or operationally feasible, ***ramp*** slope shall be permitted to be 1:8 maximum.

2. In load or unload areas and on ***amusement rides***, handrails provided along walking surfaces complying with 403 and required on ***ramps*** complying with 405 shall not be required to comply with 505 where compliance is not structurally or operationally feasible.

1002.3 Load and Unload Areas. A turning space complying with 304.2 and 304.3 shall be provided in load and unload areas.

1002.4 Wheelchair Spaces in Amusement Rides. ***Wheelchair spaces*** in ***amusement rides*** shall comply with 1002.4.

1002.4.1 Floor or Ground Surface. The floor or ground surface of ***wheelchair spaces*** shall be stable and firm.

1002.4.2 Slope. The floor or ground surface of ***wheelchair spaces*** shall have a slope not steeper than 1:48 when in the load and unload position.

1002.4.3 Gaps. Floors of ***amusement rides*** with ***wheelchair spaces*** and floors of load and unload areas shall be coordinated so that, when ***amusement rides*** are at rest in the load and

unload position, the vertical difference between the floors shall be within plus or minus 5/8 inches (16 mm) and the horizontal gap shall be 3 inches (75 mm) maximum under normal passenger load conditions.

EXCEPTION: Where compliance is not operationally or structurally feasible, ***ramps***, bridge plates, or similar devices complying with the applicable requirements of ***36 CFR 1192.83(c)*** shall be provided.

1002.4.4 Clearances. Clearances for ***wheelchair spaces*** shall comply with 1002.4.4.

EXCEPTIONS:

1. Where provided, securement devices shall be permitted to overlap required clearances.

2. ***Wheelchair spaces*** shall be permitted to be mechanically or manually repositioned.

3. ***Wheelchair spaces*** shall not be required to comply with 307.4.

1002.4.4.1 Width and Length. ***Wheelchair spaces*** shall provide a clear width of 30 inches (760 mm) minimum and a clear length of 48 inches (1220 mm) minimum measured to 9 inches (230 mm) minimum above the floor surface.

1002.4.4.2 Side Entry. Where ***wheelchair spaces*** are entered only from the side, ***amusement rides*** shall be designed to permit sufficient maneuvering clearance for individuals using a wheelchair or mobility aid to enter and exit the ride.

1002.4.4.3 Permitted Protrusions in Wheelchair Spaces. Objects are permitted to protrude a distance of 6 inches (150 mm) maximum along the front of the ***wheelchair space***, where located 9 inches (230 mm) minimum and 27 inches (685 mm) maximum above the floor or ground surface of the ***wheelchair space***. Objects are permitted to protrude a distance of 25 inches (635 mm) maximum along the front of the ***wheelchair space***, where located more than 27 inches (685 mm) above the floor or ground surface of the ***wheelchair space***.

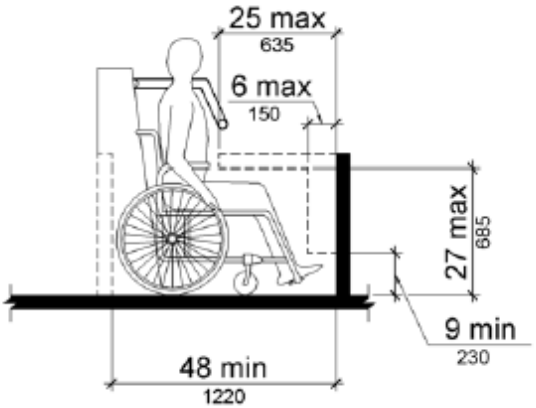

Figure 1002.4.4.3 Protrusions in Wheelchair Spaces in Amusement Rides

1002.4.5 Ride Entry. Openings providing entry to ***wheelchair spaces*** on ***amusement rides*** shall be 32 inches (815 mm) minimum clear.

1002.4.6 Approach. One side of the ***wheelchair space*** shall adjoin an ***accessible route*** when in the load and unload position.

1002.4.7 Companion Seats. Where the interior width of the ***amusement ride*** is greater than 53 inches (1345 mm), seating is provided for more than one rider, and the wheelchair is not required to be centered within the ***amusement ride***, a companion seat shall be provided for each ***wheelchair space***.

1002.4.7.1 Shoulder-to-Shoulder Seating. Where an ***amusement ride*** provides shoulder-to-shoulder seating, companion seats shall be shoulder-to-shoulder with the adjacent ***wheelchair spaces***.

EXCEPTION: Where shoulder-to-shoulder companion seating is not operationally or structurally feasible, compliance with this requirement shall be required to the maximum extent practicable.

1002.5 Amusement Ride Seats Designed for Transfer. ***Amusement ride seats*** designed for transfer shall comply with 1002.5 when positioned for loading and unloading.

1002.5.1 Clear Floor or Ground Space. A clear floor or ground space complying with 305 shall be provided in the load and unload area adjacent to the ***amusement ride seats*** designed for transfer.

1002.5.2 Transfer Height. The height of ***amusement ride seats*** designed for transfer shall be 14 inches (355 mm) minimum and 24 inches (610 mm) maximum measured from the surface of the load and unload area.

1002.5.3 Transfer Entry. Where openings are provided for transfer to ***amusement ride seats***, the openings shall provide clearance for transfer from a wheelchair or mobility aid to the ***amusement ride seats***.

1002.5.4 Wheelchair Storage Space. Wheelchair storage spaces complying with 305 shall be provided in or adjacent to unload areas for each required ***amusement ride seats*** designed for transfer and shall not overlap any required means of egress or ***accessible route***.

1002.6 Transfer Devices for Use with Amusement Rides. ***Transfer devices*** for use with ***amusement rides*** shall comply with 1002.6 when positioned for loading and unloading.

1002.6.1 Clear Floor or Ground Space. A clear floor or ground space complying with 305 shall be provided in the load and unload area adjacent to the ***transfer device***.

1002.6.2 Transfer Height. The height of ***transfer device*** seats shall be 14 inches (355 mm) minimum and 24 inches (610 mm) maximum measured from the load and unload surface.

1002.6.3 Wheelchair Storage Space. Wheelchair storage spaces complying with 305 shall be provided in or adjacent to unload areas for each required ***transfer device*** and shall not overlap any required means of egress or ***accessible route***.

1003 Recreational Boating Facilities

1003.1 General. Recreational boating ***facilities*** shall comply with 1003.

1003.2 Accessible Routes. ***Accessible routes*** serving recreational boating ***facilities***, including ***gangways*** and floating piers, shall comply with Chapter 4 except as modified by the exceptions in 1003.2.

1003.2.1 Boat Slips. ***Accessible routes*** serving ***boat slips*** shall be permitted to use the exceptions in 1003.2.1.

EXCEPTIONS:

1. Where an existing ***gangway*** or series of ***gangways*** is replaced or altered, an increase in the length of the ***gangway*** shall not be required to comply with 1003.2 unless required by 202.4.

2. ***Gangways*** shall not be required to comply with the maximum rise specified in 405.6.

3. Where the total length of a ***gangway*** or series of ***gangways*** serving as part of a required ***accessible route*** is 80 feet (24 m) minimum, ***gangways*** shall not be required to comply with 405.2.

4. Where ***facilities*** contain fewer than 25 ***boat slips*** and the total length of the ***gangway*** or series of ***gangways*** serving as part of a required ***accessible route*** is 30 feet (9145 mm) minimum, ***gangways*** shall not be required to comply with 405.2.

5. Where ***gangways*** connect to ***transition plates***, landings specified by 405.7 shall not be required.

6. Where ***gangways*** and ***transition plates*** connect and are required to have handrails, handrail extensions shall not be required. Where handrail extensions are provided on ***gangways*** or ***transition plates***, the handrail extensions shall not be required to be parallel with the ground or floor surface.

7. The ***cross slope*** specified in 403.3 and 405.3 for ***gangways***, ***transition plates***, and floating piers that are part of ***accessible routes*** shall be measured in the static position.

8. Changes in level complying with 303.3 and 303.4 shall be permitted on the surfaces of ***gangways*** and ***boat launch ramps***.

1003.2.2 Boarding Piers at Boat Launch Ramps. ***Accessible routes*** serving ***boarding piers*** at ***boat launch ramps*** shall be permitted to use the exceptions in 1003.2.2.

EXCEPTIONS:

1. ***Accessible routes*** serving floating ***boarding piers*** shall be permitted to use Exceptions 1, 2, 5, 6, 7 and 8 in 1003.2.1.

2. Where the total length of the ***gangway*** or series of ***gangways*** serving as part of a required ***accessible route*** is 30 feet (9145 mm) minimum, ***gangways*** shall not be required to comply with 405.2.

3. Where the ***accessible route*** serving a floating ***boarding pier*** or skid pier is located within a ***boat launch ramp***, the portion of the ***accessible route*** located within the ***boat launch ramp*** shall not be required to comply with 405.

1003.3 Clearances. Clearances at ***boat slips*** and on ***boarding piers*** at ***boat launch ramps*** shall comply with 1003.3.

1003.3.1 Boat Slip Clearance. ***Boat slips*** shall provide clear pier space 60 inches (1525 mm) wide minimum and at least as long as the ***boat slips***. Each 10 feet (3050 mm) maximum of linear pier edge serving ***boat slips*** shall contain at least one continuous clear opening 60 inches (1525 mm) wide minimum.

EXCEPTIONS:

1. Clear pier space shall be permitted to be 36 inches (915 mm) wide minimum for a length of 24 inches (610 mm) maximum, provided that multiple 36 inch (915 mm) wide segments are separated by segments that are 60 inches (1525 mm) wide minimum and 60 inches (1525 mm) long minimum.

2. Edge protection shall be permitted at the continuous clear openings, provided that it is 4 inches (100 mm) high maximum and 2 inches (51 mm) wide maximum.

3. In existing piers, clear pier space shall be permitted to be located perpendicular to the ***boat slip*** and shall extend the width of the ***boat slip***, where the ***facility*** has at least one ***boat slip*** complying with 1003.3, and further compliance with 1003.3 would result in a reduction in the number of ***boat slips*** available or result in a reduction of the widths of existing slips.

CAPITAL DEVELOPMENT BOARD

NOTICE OF ADOPTED RULES

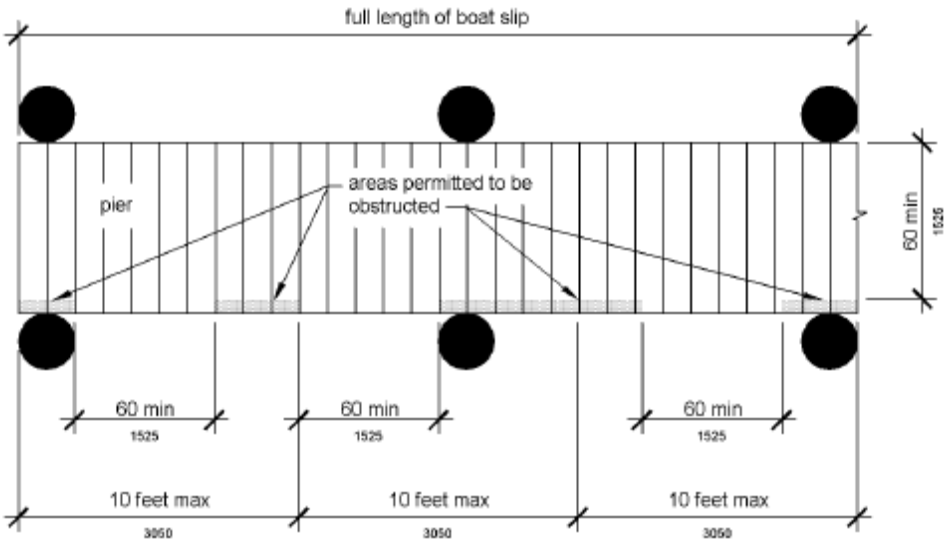

Figure 1003.3.1 Boat Slip Clearance

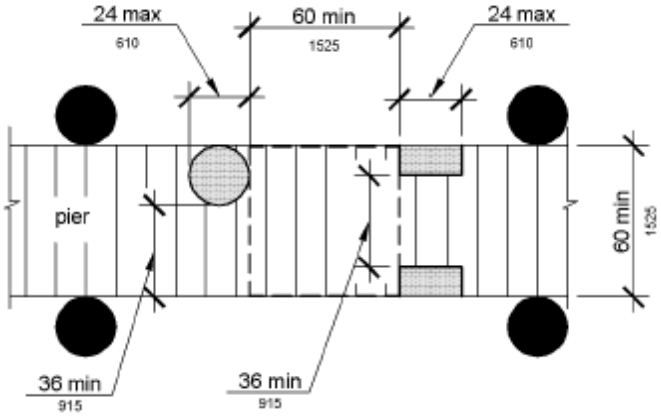

Figure 1003.3.1 (Exception 1) Clear Pier Space Reduction at Boat Slips

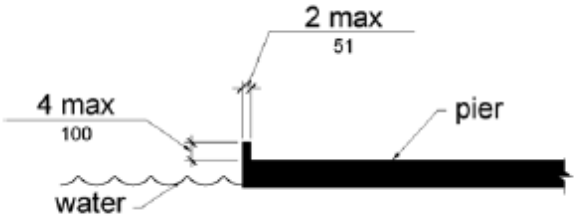

Figure 1003.3.1 (Exception 2) Edge Protection at Boat Slips

CAPITAL DEVELOPMENT BOARD

NOTICE OF ADOPTED RULES

1003.3.2 Boarding Pier Clearances. ***Boarding piers*** at ***boat launch ramps*** shall provide clear pier space 60 inches (1525 mm) wide minimum and shall extend the full length of the ***boarding pier***. Every 10 feet (3050 mm) maximum of linear pier edge shall contain at least one continuous clear opening 60 inches (1525 mm) wide minimum.

EXCEPTIONS:

1. The clear pier space shall be permitted to be 36 inches (915 mm) wide minimum for a length of 24 inches (610 mm) maximum provided that multiple 36 inch (915 mm) wide segments are separated by segments that are 60 inches (1525 mm) wide minimum and 60 inches (1525 mm) long minimum.

2. Edge protection shall be permitted at the continuous clear openings provided that it is 4 inches (100 mm) high maximum and 2 inches (51 mm) wide maximum.

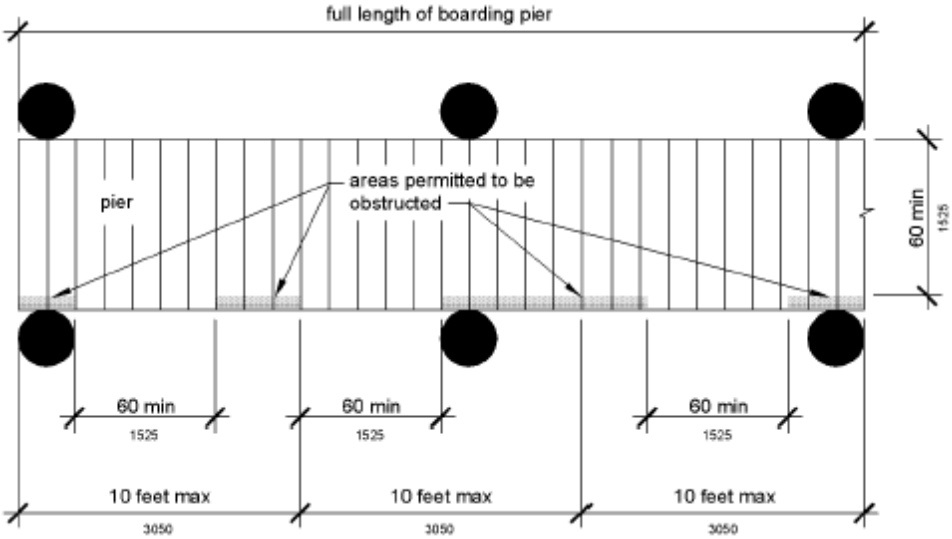

Figure 1003.3.2 Boarding Pier Clearance

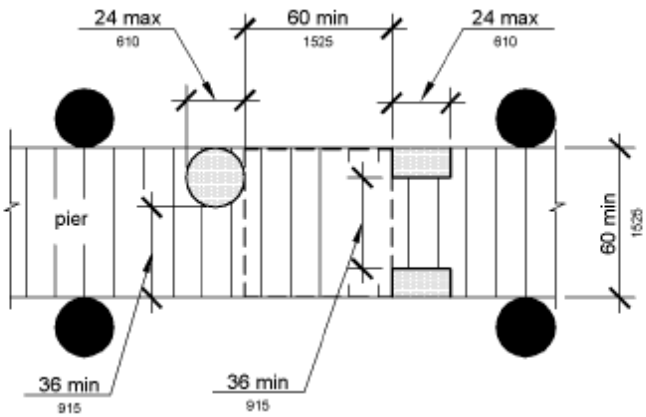

Figure 1003.3.2 (Exception 1) Clear Pier Space Reduction at Boarding Piers

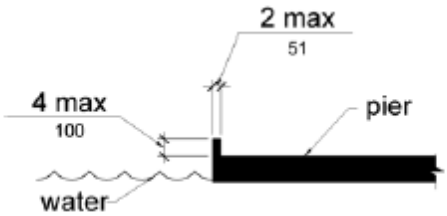

Figure 1003.3.2 (Exception 2) Edge Protection at Boarding Piers

1004 Exercise Machines and Equipment

1004.1 Clear Floor Space. Exercise machines and equipment shall have a clear floor space complying with 305 positioned for transfer or for use by an individual seated in a wheelchair. Clear floor or ground spaces required at exercise machines and equipment shall be permitted to overlap.

1005 Fishing Piers and Platforms

1005.1 Accessible Routes. ***Accessible routes*** serving fishing piers and platforms, including ***gangways*** and floating piers, shall comply with Chapter 4.

EXCEPTIONS:

1. ***Accessible routes*** serving floating fishing piers and platforms shall be permitted to use Exceptions 1, 2, 5, 6, 7 and 8 in 1003.2.1.

2. Where the total length of the ***gangway*** or series of ***gangways*** serving as part of a required ***accessible route*** is 30 feet (9145 mm) minimum, ***gangways*** shall not be required to comply with 405.2.

1005.2 Railings. Where provided, railings, guards, or handrails shall comply with 1005.2.

1005.2.1 Height. At least 25 percent of the railings, guards, or handrails shall be 34 inches (865 mm) maximum above the ground or deck surface.

EXCEPTION: Where a guard complying with sections 1015.3, 1015.4 and 1608.7 of the International Building Code (2015 edition) (incorporated by reference, see "Referenced Standards" in Chapter 1) is provided, the guard shall not be required to comply with 1005.2.1.

1005.2.1.1 Dispersion. Railings, guards, or handrails required to comply with 1005.2.1 shall be dispersed throughout the fishing pier or platform.

1005.3 Edge Protection. Where railings, guards, or handrails complying with 1005.2 are provided, edge protection complying with 1005.3.1 or 1005.3.2 shall be provided.

1005.3.1 Curb or Barrier. Curbs or barriers shall extend 2 inches (51 mm) minimum above the surface of the fishing pier or platform.

1005.3.2 Extended Ground or Deck Surface. The ground or deck surface shall extend 12 inches (305 mm) minimum beyond the inside face of the railing. Toe clearance shall be provided and shall be 30 inches (760 mm) wide minimum and 9 inches (230 mm) minimum above the ground or deck surface beyond the railing.

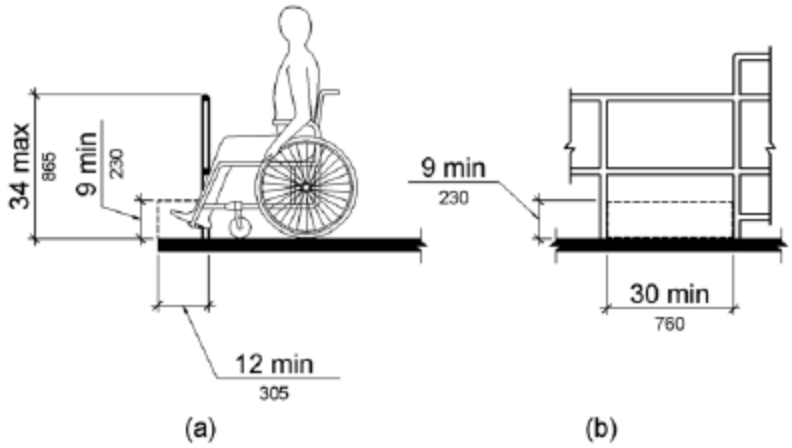

Figure 1005.3.2 Extended Ground or Deck Surface at Fishing Piers and Platforms

1005.4 Clear Floor or Ground Space. At each location where there are railings, guards, or handrails complying with 1005.2.1, a clear floor or ground space complying with 305 shall be provided. Where there are no railings, guards, or handrails, at least one clear floor or ground space complying with 305 shall be provided on the fishing pier or platform.

1005.5 Turning Space. At least one turning space complying with 304.3 shall be provided on fishing piers and platforms.

1006 Golf Facilities

1006.1 General. Golf ***facilities*** shall comply with 1006.

1006.2 Accessible Routes. ***Accessible routes*** serving ***teeing grounds***, practice ***teeing grounds***, putting greens, practice putting greens, teeing stations at driving ranges, course weather shelters, golf car rental areas, bag drop areas, and course toilet rooms shall comply with Chapter 4 and shall be 48 inches (1220 mm) wide minimum. Where handrails are provided, ***accessible routes*** shall be 60 inches (1525 mm) wide minimum.

EXCEPTION: Handrails shall not be required on golf courses. Where handrails are provided on golf courses, the handrails shall not be required to comply with 505.

1006.3 Golf Car Passages. ***Golf car passages*** shall comply with 1006.3.

1006.3.1 Clear Width. The clear width of ***golf car passages*** shall be 48 inches (1220 mm) minimum.

1006.3.2 Barriers. Where curbs or other constructed barriers prevent golf cars from entering a fairway, openings 60 inches (1525 mm) wide minimum shall be provided at intervals not to exceed 75 yards (69 m).

1006.4 Weather Shelters. A clear floor or ground space 60 inches (1525 mm) minimum by 96 inches (2440 mm) minimum shall be provided within weather shelters.

1007 Miniature Golf Facilities

1007.1 General. Miniature golf ***facilities*** shall comply with 1007.

1007.2 Accessible Routes. ***Accessible routes*** serving holes on miniature golf courses shall comply with Chapter 4. ***Accessible routes*** located on playing surfaces of miniature golf holes shall be permitted to use the exceptions in 1007.2.

EXCEPTIONS:

1. Playing surfaces shall not be required to comply with 302.2.

2. Where ***accessible routes*** intersect playing surfaces of holes, a 1 inch (25 mm) maximum curb shall be permitted for a width of 32 inches (815 mm) minimum.

3. A slope not steeper than 1:4 for a 4 inch (100 mm) maximum rise shall be permitted.

4. ***Ramp*** landing slopes specified by 405.7.1 shall be permitted to be 1:20 maximum.

5. ***Ramp*** landing length specified by 405.7.3 shall be permitted to be 48 inches (1220 mm) long minimum.

6. ***Ramp*** landing size specified by 405.7.4 shall be permitted to be 48 inches (1220 mm) minimum by 60 inches (1525 mm) minimum.

7. Handrails shall not be required on holes. Where handrails are provided on holes, the handrails shall not be required to comply with 505.

1007.3 Miniature Golf Holes. Miniature golf holes shall comply with 1007.3.

1007.3.1 Start of Play. A clear floor or ground space 48 inches (1220 mm) minimum by 60 inches (1525 mm) minimum with slopes not steeper than 1:48 shall be provided at the start of play.

1007.3.2 Golf Club Reach Range Area. All areas within holes where golf balls rest shall be within 36 inches (915 mm) maximum of a clear floor or ground space 36 inches (915 mm) wide minimum and 48 inches (1220 mm) long minimum having a ***running slope*** not steeper than 1:20. The clear floor or ground space shall be served by an ***accessible route***.

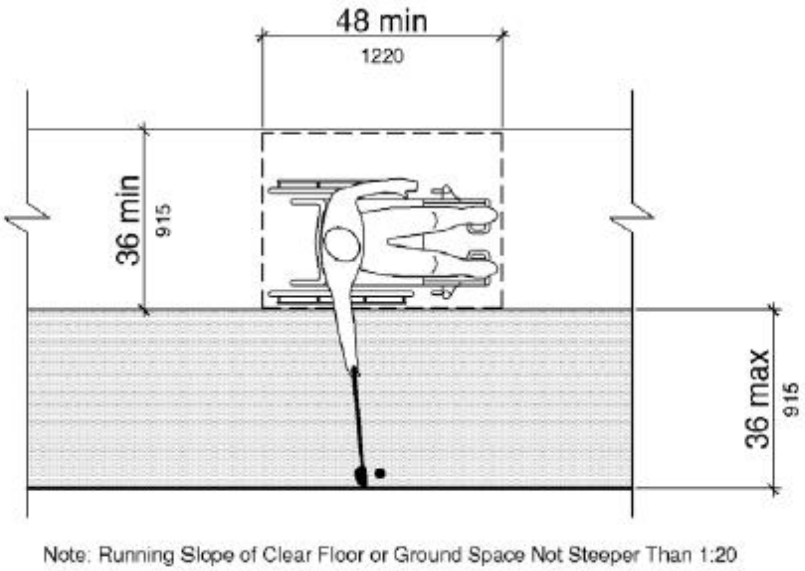

Figure 1007.3.2 Golf Club Reach Range Area

1008 Play Areas

1008.1 General. ***Play areas*** shall comply with 1008.

1008.2 Accessible Routes. ***Accessible routes*** serving ***play areas*** shall comply with Chapter 4 and 1008.2 and shall be permitted to use the exceptions in 1008.2.1 through 1008.2.3. Where ***accessible routes*** serve ***ground level play components***, the vertical clearance shall be 80 inches high (2030 mm) minimum.

1008.2.1 Ground Level and Elevated Play Components. ***Accessible routes*** serving ***ground level play components*** and ***elevated play components*** shall be permitted to use the exceptions in 1008.2.1.

EXCEPTIONS:

1. Transfer systems complying with 1008.3 shall be permitted to connect ***elevated play components*** except where 20 or more ***elevated play components*** are provided no more than 25 percent of the ***elevated play components*** shall be permitted to be connected by transfer systems.

2. Where transfer systems are provided, an ***elevated play component*** shall be permitted to connect to another ***elevated play component*** as part of an ***accessible route***.

1008.2.2 Soft Contained Play Structures. ***Accessible routes*** serving ***soft contained play structures*** shall be permitted to use the exception in 1008.2.2.

EXCEPTION: Transfer systems complying with 1008.3 shall be permitted to be used as part of an ***accessible route***.

1008.2.3 Water Play Components. ***Accessible routes*** serving water ***play components*** shall be permitted to use the exceptions in 1008.2.3.

EXCEPTIONS:

1. Where the surface of the ***accessible route***, clear floor or ground spaces, or turning spaces serving water ***play components*** is submerged, compliance with 302, 403.3, 405.2, 405.3, and 1008.2.6 shall not be required.

2. Transfer systems complying with 1008.3 shall be permitted to connect ***elevated play components*** in water.

1008.2.4 Clear Width. ***Accessible routes*** connecting ***play components*** shall provide a clear width complying with 1008.2.4.

1008.2.4.1 Ground Level. At ground level, the clear width of ***accessible routes*** shall be 60 inches (1525 mm) minimum.

EXCEPTIONS:

1. In ***play areas*** less than 1000 square feet (93 m^2), the clear width of ***accessible routes*** shall be permitted to be 44 inches (1120 mm) minimum, if at least one turning space complying with 304.3 is provided where the restricted ***accessible route*** exceeds 30 feet (9145 mm) in length.

2. The clear width of ***accessible routes*** shall be permitted to be 36 inches (915 mm) minimum for a distance of 60 inches (1525 mm) maximum provided that multiple reduced width segments are separated by segments that are 60 inches (1525 mm) wide minimum and 60 inches (1525 mm) long minimum.

1008.2.4.2 Elevated. The clear width of ***accessible routes*** connecting ***elevated play components*** shall be 36 inches (915 mm) minimum.

EXCEPTIONS:

1. The clear width of ***accessible routes*** connecting ***elevated play components*** shall be permitted to be reduced to 32 inches (815 mm) minimum for a distance of 24 inches (610 mm) maximum provided that reduced width segments are separated by segments that are 48 inches (1220 mm) long minimum and 36 inches (915 mm) wide minimum.

2. The clear width of transfer systems connecting ***elevated play components*** shall be permitted to be 24 inches (610 mm) minimum.

1008.2.5 Ramps. Within ***play areas***, ***ramps*** connecting ***ground level play components*** and ***ramps*** connecting ***elevated play components*** shall comply with 1008.2.5.

1008.2.5.1 Ground Level. ***Ramp*** runs connecting ***ground level play components*** shall have a ***running slope*** not steeper than 1:16.

1008.2.5.2 Elevated. The rise for any ***ramp*** run connecting ***elevated play components*** shall be 12 inches (305 mm) maximum.

1008.2.5.3 Handrails. Where required on ***ramps*** serving ***play components***, the handrails shall comply with 505 except as modified by 1008.2.5.3.

EXCEPTIONS:

1. Handrails shall not be required on ***ramps*** located within ground level ***use zones***.

2. Handrail extensions shall not be required.

1008.2.5.3.1 Handrail Gripping Surfaces. Handrail gripping surfaces with a circular cross section shall have an outside diameter of 0.95 inch (24 mm) minimum and 1.55 inches (39 mm) maximum. Where the shape of the gripping surface is non-circular, the handrail shall provide an equivalent gripping surface.

1008.2.5.3.2 Handrail Height. The top of handrail gripping surfaces shall be 20 inches (510 mm) minimum and 28 inches (710 mm) maximum above the ***ramp*** surface.

1008.2.6 Ground Surfaces. Ground surfaces on ***accessible routes***, clear floor or ground spaces, and turning spaces shall comply with 1008.2.6.

1008.2.6.1 Accessibility. Ground surfaces shall comply with ASTM F 1951 (incorporated by reference, see "Referenced Standards" in Chapter 1). Ground surfaces shall be inspected and maintained regularly and frequently to ensure continued compliance with ASTM F 1951.

1008.2.6.2 Use Zones. Ground surfaces located within ***use zones*** shall comply with ASTM F 1292 (1999 edition or 2004 edition) (incorporated by reference, see "Referenced Standards" in Chapter 1).

1008.3 Transfer Systems. Where transfer systems are provided to connect to ***elevated play components***, transfer systems shall comply with 1008.3.

1008.3.1 Transfer Platforms. Transfer platforms shall be provided where transfer is intended from wheelchairs or other mobility aids. Transfer platforms shall comply with 1008.3.1.

1008.3.1.1 Size. Transfer platforms shall have level surfaces 14 inches (355 mm) deep minimum and 24 inches (610 mm) wide minimum.

1008.3.1.2 Height. The height of transfer platforms shall be 11 inches (280 mm) minimum and 18 inches (455 mm) maximum measured to the top of the surface from the ground or floor surface.

1008.3.1.3 Transfer Space. A transfer space complying with 305.2 and 305.3 shall be provided adjacent to the transfer platform. The 48 inch (1220 mm) long minimum dimension of the transfer space shall be centered on and parallel to the 24 inch (610 mm) long minimum side of

the transfer platform. The side of the transfer platform serving the transfer space shall be unobstructed.

1008.3.1.4 Transfer Supports. At least one means of support for transferring shall be provided.

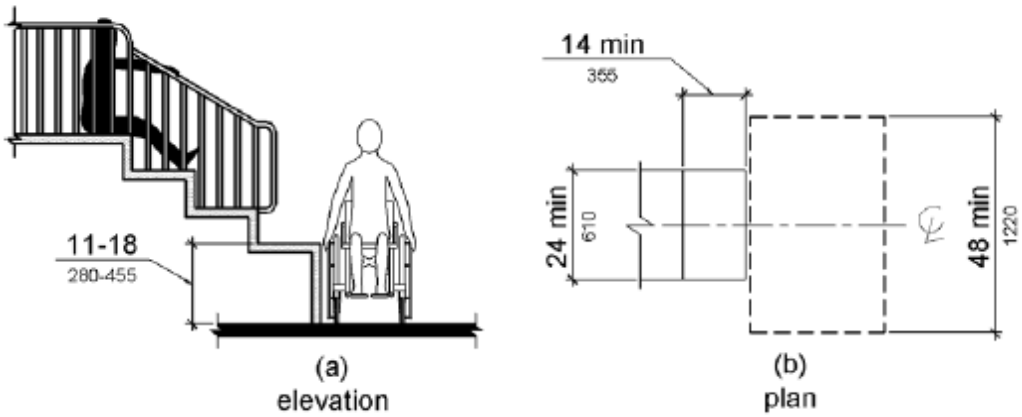

Figure 1008.3.1 Transfer Platforms

1008.3.2 Transfer Steps. Transfer steps shall be provided where movement is intended from transfer platforms to levels with ***elevated play components*** required to be on ***accessible routes***. Transfer steps shall comply with 1008.3.2.

1008.3.2.1 Size. Transfer steps shall have level surfaces 14 inches (355 mm) deep minimum and 24 inches (610 mm) wide minimum.

1008.3.2.2 Height. Each transfer step shall be 8 inches (205 mm) high maximum.

1008.3.2.3 Transfer Supports. At least one means of support for transferring shall be provided.

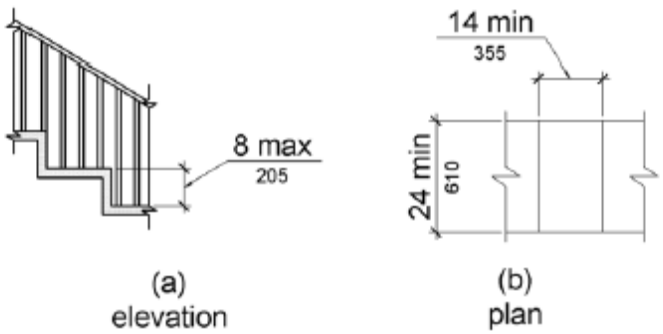

Figure 1008.3.2 Transfer Steps

1008.4 Play Components. ***Ground level play components*** on ***accessible routes*** and ***elevated play components*** connected by ***ramps*** shall comply with 1008.4.

1008.4.1 Turning Space. At least one turning space complying with 304 shall be provided on the same level as ***play components***. Where swings are provided, the turning space shall be located immediately adjacent to the swing.

1008.4.2 Clear Floor or Ground Space. Clear floor or ground space complying with 305.2 and 305.3 shall be provided at ***play components***.

1008.4.3 Play Tables. Where play tables are provided, knee clearance 24 inches (610 mm) high minimum, 17 inches deep (430 mm) minimum, and 30 inches (760 mm) wide minimum shall be provided. The tops of rims, curbs, or other obstructions shall be 31 inches (785 mm) high maximum.

EXCEPTION: Play tables designed and constructed primarily for children 5 years and younger shall not be required to provide knee clearance where the clear floor or ground space required by 1008.4.2 is arranged for a parallel approach.

1008.4.4 Entry Points and Seats. Where ***play components*** require transfer to entry points or seats, the entry points or seats shall be 11 inches (280 mm) minimum and 24 inches (610 mm) maximum from the clear floor or ground space.

EXCEPTION: Entry points of slides shall not be required to comply with 1008.4.4.

1008.4.5 Transfer Supports. Where ***play components*** require transfer to entry points or seats, at least one means of support for transferring shall be provided.

1009 Swimming Pools, Wading Pools, and Spas

1009.1 General. Where provided, pool lifts, sloped entries, transfer walls, transfer systems, and pool stairs shall comply with 1009.

1009.2 Pool Lifts. Pool lifts shall comply with 1009.2.

1009.2.1 Pool Lift Location. Pool lifts shall be located where the water level does not exceed 48 inches (1220 mm).

EXCEPTIONS:

1. Where the entire pool depth is greater than 48 inches (1220 mm), compliance with 1009.2.1 shall not be required.

2. Where multiple pool lift locations are provided, no more than one pool lift shall be required to be located in an area where the water level is 48 inches (1220 mm) maximum.

1009.2.2 Seat Location. In the raised position, the centerline of the seat shall be located over the deck and 16 inches (405 mm) minimum from the edge of the pool. The deck surface between the centerline of the seat and the pool edge shall have a slope not steeper than 1:48.

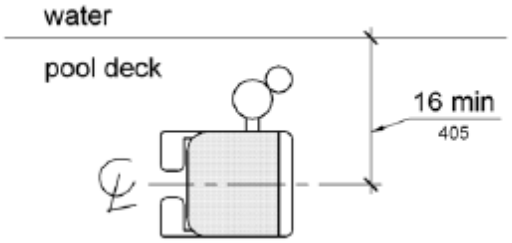

Figure 1009.2.2 Pool Lift Seat Location

1009.2.3 Clear Deck Space. On the side of the seat opposite the water, a clear deck space shall be provided parallel with the seat. The space shall be 36 inches (915 mm) wide minimum and shall extend forward 48 inches (1220 mm) minimum from a line located 12 inches (305 mm) behind the rear edge of the seat. The clear deck space shall have a slope not steeper than 1:48.

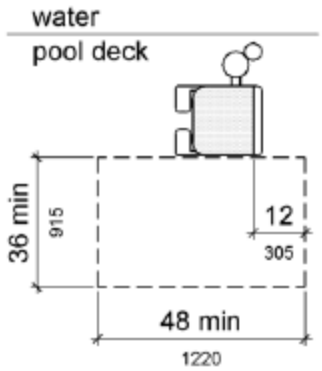

Figure 1009.2.3 Clear Deck Space at Pool Lifts

1009.2.4 Seat Height. The height of the lift seat shall be designed to allow a stop at 16 inches (405 mm) minimum to 19 inches (485 mm) maximum measured from the deck to the top of the seat surface when in the raised (load) position.

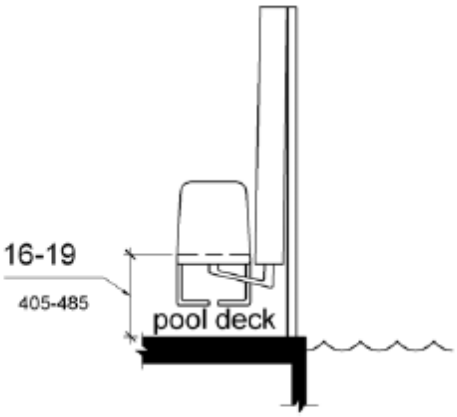

Figure 1009.2.4 Pool Lift Seat Height

1009.2.5 Seat Width. The seat shall be 16 inches (405 mm) wide minimum.

1009.2.6 Footrests and Armrests. Footrests shall be provided and shall move with the seat. If provided, the armrest positioned opposite the water shall be removable or shall fold clear of the seat when the seat is in the raised (load) position.

EXCEPTION: Footrests shall not be required on pool lifts provided in spas.

1009.2.7 Operation. The lift shall be capable of unassisted operation from both the deck and water levels. Controls and operating mechanisms shall be unobstructed when the lift is in use and shall comply with 309.4.

1009.2.8 Submerged Depth. The lift shall be designed so that the seat will submerge to a water depth of 18 inches (455 mm) minimum below the stationary water level.

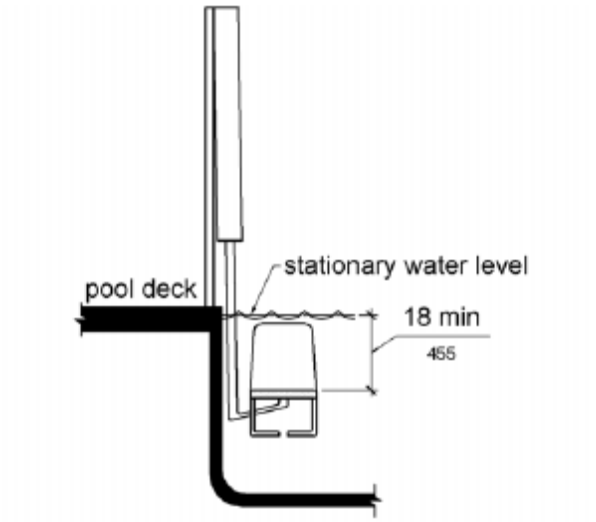

Figure 1009.2.8 Pool Lift Submerged Depth

1009.2.9 Lifting Capacity. Single person pool lifts shall have a weight capacity of 300 pounds. (136 kg) minimum and be capable of sustaining a static load of at least one and a half times the rated load.

1009.3 Sloped Entries. Sloped entries shall comply with 1009.3.

1009.3.1 Sloped Entries. Sloped entries shall comply with Chapter 4 except as modified in 1009.3.1 through 1009.3.3.

EXCEPTION: Where sloped entries are provided, the surfaces shall not be required to be slip resistant.

1009.3.2 Submerged Depth. Sloped entries shall extend to a depth of 24 inches (610 mm) minimum and 30 inches (760 mm) maximum below the stationary water level. Where landings

are required by 405.7, at least one landing shall be located 24 inches (610 mm) minimum and 30 inches (760 mm) maximum below the stationary water level.

EXCEPTION: In wading pools, the sloped entry and landings, if provided, shall extend to the deepest part of the wading pool.

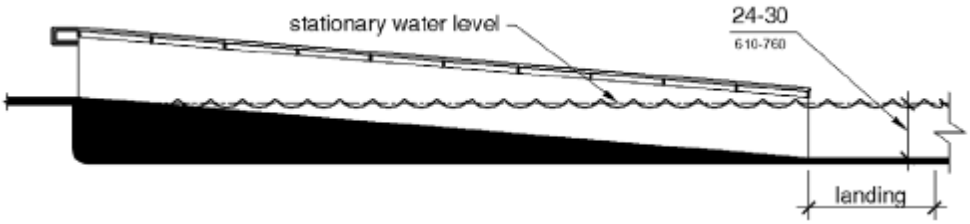

Figure 1009.3.2 Sloped Entry Submerged Depth

1009.3.3 Handrails. At least two handrails complying with 505 shall be provided on the sloped entry. The clear width between required handrails shall be 33 inches (840 mm) minimum and 38 inches (965 mm) maximum.

EXCEPTIONS:

1. Handrail extensions specified by 505.10.1 shall not be required at the bottom landing serving a sloped entry .

2. Where a sloped entry is provided for wave action pools, leisure rivers, sand bottom pools, and other pools where user access is limited to one area, the handrails shall not be required to comply with the clear width requirements of 1009.3.3.

3. Sloped entries in wading pools shall not be required to provide handrails complying with 1009.3.3. If provided, handrails on sloped entries in wading pools shall not be required to comply with 505.

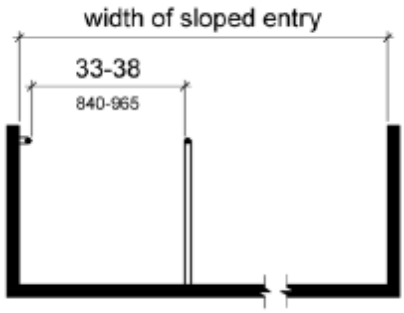

Figure 1009.3.3 Handrails for Sloped Entry

1009.4 Transfer Walls. Transfer walls shall comply with 1009.4.

1009.4.1 Clear Deck Space. A clear deck space of 60 inches (1525 mm) minimum by 60 inches (1525 mm) minimum with a slope not steeper than 1:48 shall be provided at the base of the transfer wall. Where one grab bar is provided, the clear deck space shall be centered on the grab bar. Where two grab bars are provided, the clear deck space shall be centered on the clearance between the grab bars.

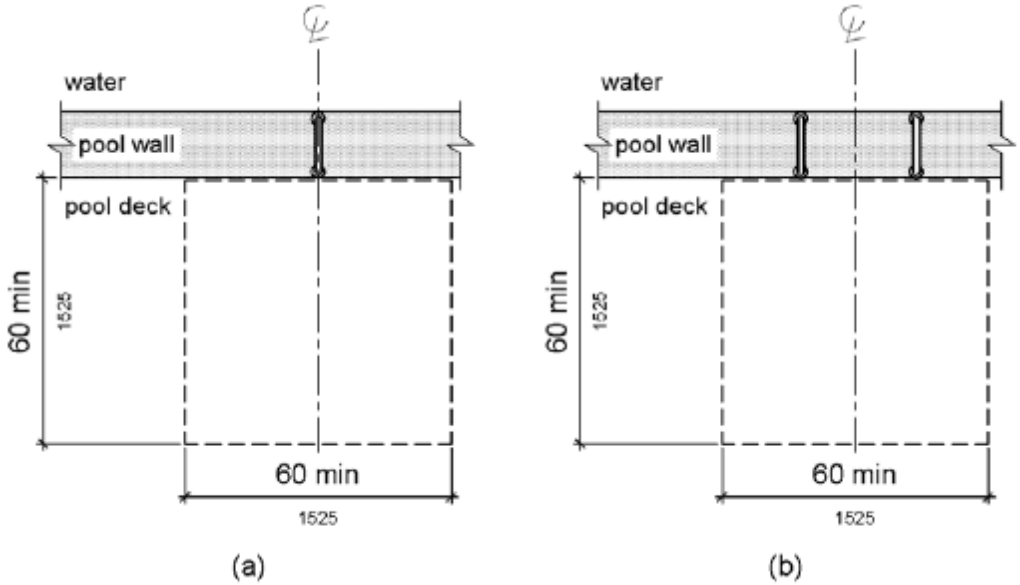

Figure 1009.4.1 Clear Deck Space at Transfer Walls

1009.4.2 Height. The height of the transfer wall shall be 16 inches (405 mm) minimum and 19 inches (485 mm) maximum measured from the deck.

Figure 1009.4.2 Transfer Wall Height

1009.4.3 Wall Depth and Length. The depth of the transfer wall shall be 12 inches (305 mm) minimum and 16 inches (405 mm) maximum. The length of the transfer wall shall be 60 inches (1525 mm) minimum and shall be centered on the clear deck space.

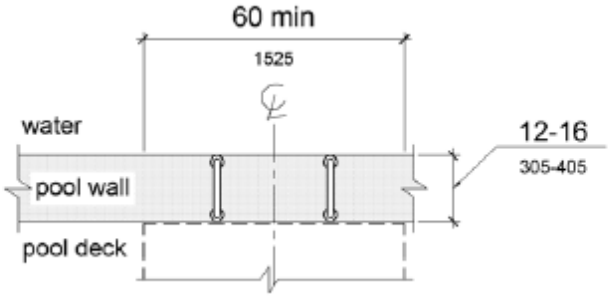

Figure 1009.4.3 Depth and Length of Transfer Walls

1009.4.4 Surface. Surfaces of transfer walls shall not be sharp and shall have rounded edges.

1009.4.5 Grab Bars. At least one grab bar complying with 609 shall be provided on the transfer wall. Grab bars shall be perpendicular to the pool wall and shall extend the full depth of the transfer wall. The top of the gripping surface shall be 4 inches (100 mm) minimum and 6 inches (150 mm) maximum above transfer walls. Where one grab bar is provided, clearance shall be 24 inches (610 mm) minimum on both sides of the grab bar. Where two grab bars are provided, clearance between grab bars shall be 24 inches (610 mm) minimum.

EXCEPTION: Grab bars on transfer walls shall not be required to comply with 609.4.

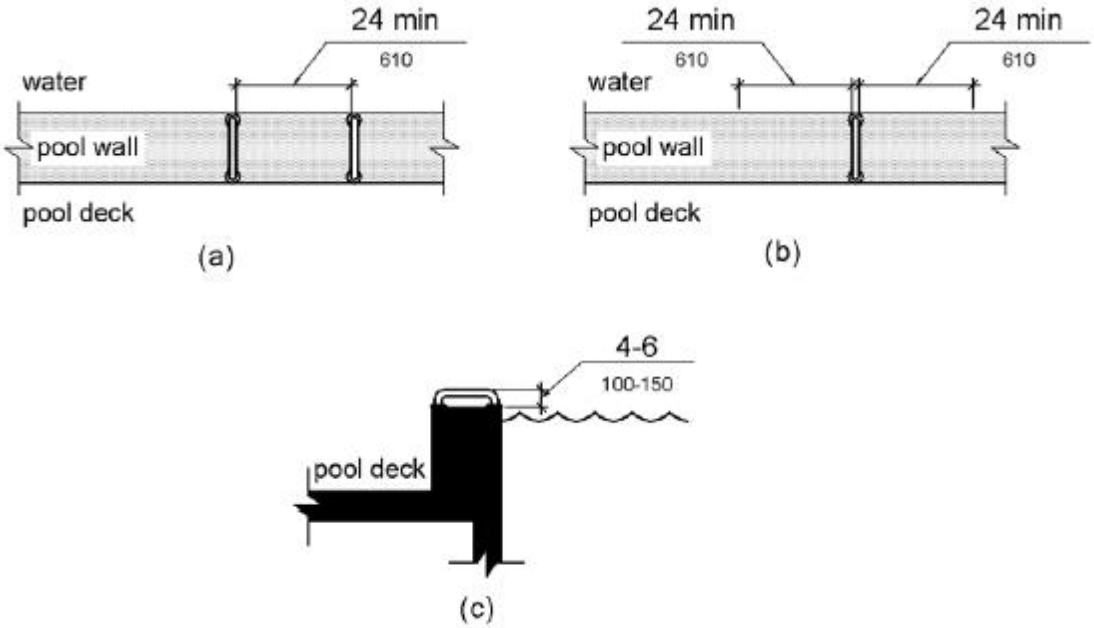

Figure 1009.4.5 Grab Bars for Transfer Walls

1009.5 Transfer Systems. Transfer systems shall comply with 1009.5.

1009.5.1 Transfer Platform. A transfer platform shall be provided at the head of each transfer system. Transfer platforms shall provide 19 inches (485 mm) minimum clear depth and 24 inches (610 mm) minimum clear width.

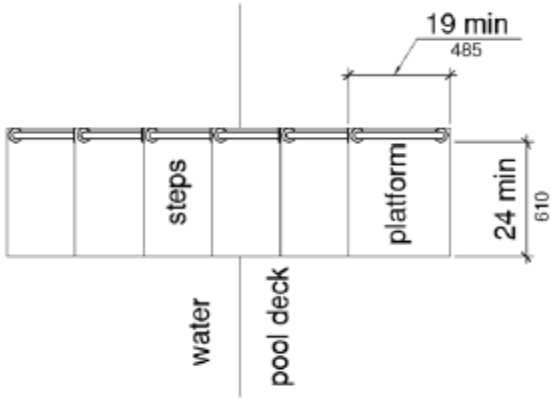

Figure 1009.5.1 Size of Transfer Platform

1009.5.2 Transfer Space. A transfer space of 60 inches (1525 mm) minimum by 60 inches (1525 mm) minimum with a slope not steeper than 1:48 shall be provided at the base of the transfer platform surface and shall be centered along a 24 inch (610 mm) minimum side of the transfer platform. The side of the transfer platform serving the transfer space shall be unobstructed.

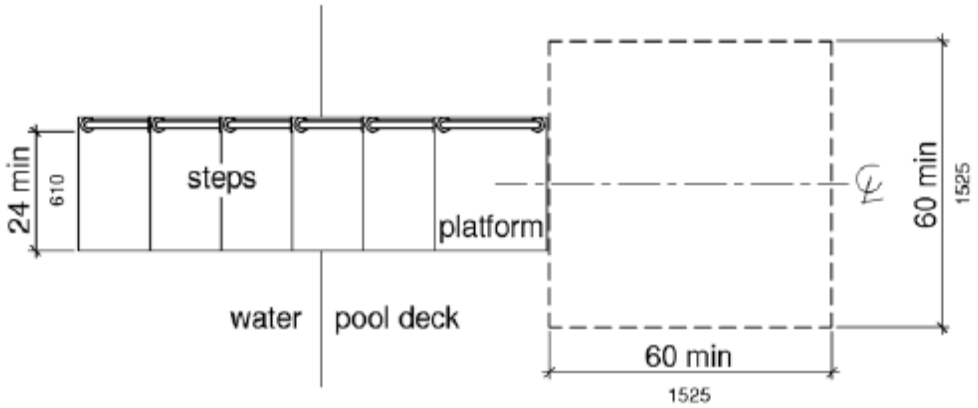

Figure 1009.5.2 Clear Deck Space at Transfer Platform

1009.5.3 Height. The height of the transfer platform shall comply with 1009.4.2.

1009.5.4 Transfer Steps. Transfer step height shall be 8 inches (205 mm) maximum. The surface of the bottom tread shall extend to a water depth of 18 inches (455 mm) minimum below the stationary water level.

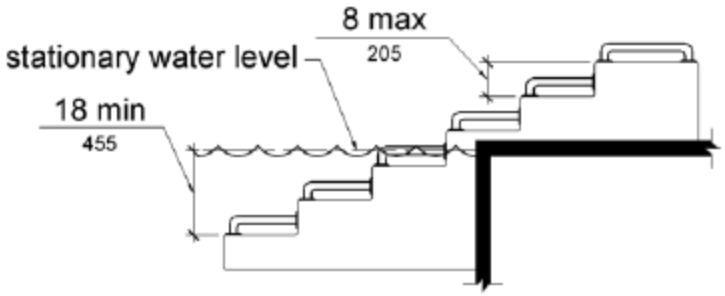

Figure 1009.5.4 Transfer Steps

1009.5.5 Surface. The surface of the transfer system shall not be sharp and shall have rounded edges.

1009.5.6 Size. Each transfer step shall have a tread clear depth of 14 inches (355 mm) minimum and 17 inches (430 mm) maximum and shall have a tread clear width of 24 inches (610 mm) minimum.

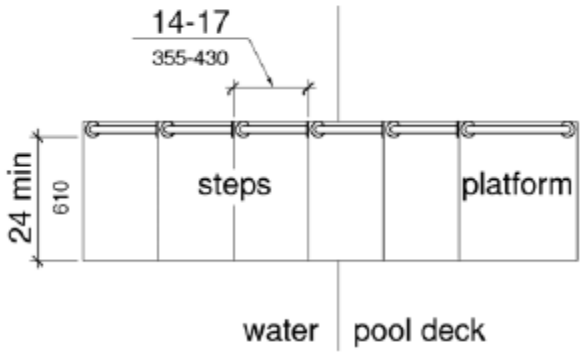

Figure 1009.5.6 Size of Transfer Steps

1009.5.7 Grab Bars. At least one grab bar on each transfer step and the transfer platform or a continuous grab bar serving each transfer step and the transfer platform shall be provided. Where a grab bar is provided on each step, the tops of gripping surfaces shall be 4 inches (100 mm) minimum and 6 inches (150 mm) maximum above each step and transfer platform. Where a continuous grab bar is provided, the top of the gripping surface shall be 4 inches (100 mm) minimum and 6 inches (150 mm) maximum above the step nosing and transfer platform. Grab bars shall comply with 609 and be located on at least one side of the transfer system. The grab bar located at the transfer platform shall not obstruct transfer.

EXCEPTION: Grab bars on transfer systems shall not be required to comply with 609.4.

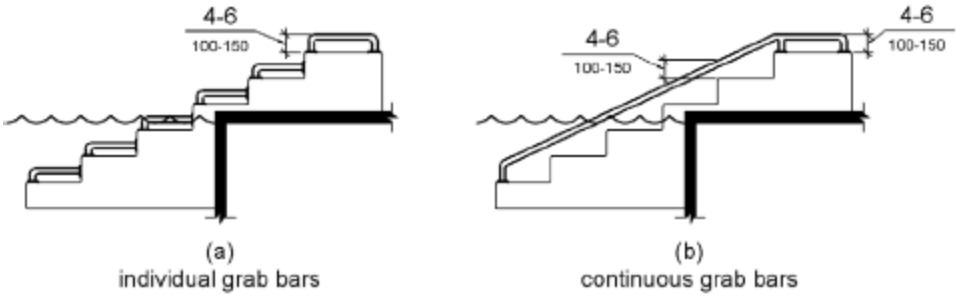

Figure 1009.5.7 Grab Bars

1009.6 Pool Stairs. Pool stairs shall comply with 1009.6.

1009.6.1 Pool Stairs. Pool stairs shall comply with 504.

EXCEPTION: Pool step riser heights shall not be required to be 4 inches (100 mm) high minimum and 7 inches (180 mm) high maximum provided that riser heights are uniform.

1009.6.2 Handrails. The width between handrails shall be 20 inches (510 mm) minimum and 24 inches (610 mm) maximum. Handrail extensions required by 505.10.3 shall not be required on pool stairs.

1010 Shooting Facilities with Firing Positions

1010.1 Turning Space. A circular turning space 60 inches (1525 mm) diameter minimum with slopes not steeper than 1:48 shall be provided at shooting ***facilities*** with firing positions.

1011 Outdoor Constructed Features

1011.1 General. *All* ***outdoor constructed features*** *shall comply with 1011.2 and 1011.3.* ***Outdoor constructed features*** *specified in 1011.4 through 1011.8 shall comply with those provisions, as applicable.*

1011.2 Clear Ground Space. *A clear ground space complying with 1011.2 shall be provided at* ***outdoor constructed features****.*

EXCEPTIONS:

1. *Where individual* ***outdoor constructed features*** *are altered and the ground surface is not altered, the clear ground space shall not be required to comply with 1011.2.2 and 1011.2.3.*

2. *In* ***alterations****, when an entity determines that a condition in 1019 does not permit full compliance with a specific provision in 1011.2, the clear ground space shall comply with the provision to the extent practicable.*

1011.2.1 Size and Location. *The size and location of the clear ground space shall be in accordance with Table 1011.2.1. Unless otherwise specified in Table 1011.2.1, one full unobstructed side of the clear ground space shall adjoin or overlap an outdoor recreation access route or a* ***trail****, as applicable, or another clear ground space.*

Table 1011.2.1 Clear Ground Space

Outdoor Constructed Feature	***Minimum Size and Location***
Picnic tables	*36 inches (915 mm) on all usable sides of the table measured from the back edge of the benches*
Fire rings, grills, fireplaces, and woodstoves	*48 inches (1220 mm) by 48 inches (1220 mm) on all usable sides of the fire ring, grill, fireplace, and woodstove* *Center the space on each usable side of the grill, fireplace, and woodstove*
Trash and recycling receptacles	*36 inches (915 mm) by 48 inches (1220 mm) positioned for forward approach to the receptacle opening; or 30 inches (760 mm) by 60 inches (1525 mm) positioned for a parallel approach to the receptacle opening*
Water hydrants	*72 inches (1830 mm) by 48 inches (1220 mm) with the long side of the space adjoining or overlapping an outdoor recreation access route or trail, as applicable, or another clear ground space* *Locate the space so that the water spout is 11 inches (280 mm) minimum and 12 inches (305 mm) maximum from the rear center of the long side of the space*
Utility and sewage hookups	*30 inches (760 mm) by 60 inches (1525 mm) with the long side of the space adjoining or overlapping an accessible parking space or pull-up space for recreational vehicles* *Locate the space so that the hook-ups are at the rear center of the space* *Bollards or other barriers shall not obstruct the clear ground space in front of the hook-ups*
Outdoor rinsing showers	*60 inches (1525 mm) by 60 inches (1525 mm) centered on the shower heads* *Locate the space so that the shower pedestal or wall with the shower head are at the rear end of the space*
Benches	*36 inches (915 mm) by 48 inches (1220 mm) positioned near the bench with one side of the space adjoining an outdoor recreation access route or trail, as applicable* *The clear ground space shall not overlap the outdoor recreation access route or trail, or another clear ground space*
Viewing Scopes	*36 inches (915 mm) by 48 inches (1220 mm) positioned for forward approach to the viewing scope*

	Provide knee and toe clearance complying with 306 under the viewing scope *Locate the space so that the eyepiece is centered on the space*

1011.2.2 Surface. *The surface of the clear ground space shall be firm and stable.*

1011.2.3 Slope. *The slope of the clear ground space surface shall not be steeper than 1:48 in any direction.*

EXCEPTION: *Where the surface is other than asphalt, concrete, or* ***boards****, slopes not steeper than 1:20 shall be permitted when necessary for drainage.*

1011.2.4 Openings. *Openings in the clear ground space surface shall not allow the passage of a sphere more than 1/2 inch (13 mm) in diameter.*

1011.3 Operable Parts. Operable parts *shall comply with 309.3 and 309.4.*

EXCEPTIONS:

1. *Fire rings, grills, fireplaces, wood stoves, water hydrants, and water utility hookups shall comply with 309.4 to the extent practicable.*

2. *Trash and recycling receptacles with hinged lids and controls to keep out large animals shall comply with 309.4 to the extent practicable.*

3. *Dumpster type trash and recycling receptacles shall not be required to comply with 309.3 and 309.4.*

4. *Sewage hatches shall not be required to comply with 309.3 and 309.4.*

1011.4 Picnic Tables. *Picnic tables shall comply with 1011.4.*

1011.4.1 Height. *The tops of picnic tables shall comply with 902.3.*

1011.4.2 Wheelchair Space. *Picnic tables shall provide at least one* ***wheelchair space*** *for each 24 linear feet (7320 mm) of usable table surface perimeter.* ***Wheelchair spaces*** *shall be 30 inches (760 mm) minimum by 48 inches (1220 mm) minimum.* ***Wheelchair spaces*** *shall be*

positioned for a forward approach to the table and provide knee and toe clearance complying with 306 under the table.

1011.5 Fire Rings, Grills, Fireplaces, and Wood Stoves*. Fire rings, grills, fireplaces, and wood stoves shall comply with 1011.5.*

1011.5.1 Fire Building Surfaces. *Fire building surfaces shall be 9 inches (230 mm) minimum above the ground.*

1011.5.2 Cooking Surfaces. *Where provided, cooking surfaces shall be 15 inches (380 mm) minimum and 34 inches (865 mm) maximum above the ground.*

1011.5.3 Raised Edges or Walls. *Where fire rings, grills, or fireplaces are constructed with raised edges or walls, the depth of the raised edge or wall shall be 10 inches (255 mm) maximum.*

1011.6 Water Spouts. *Water spouts at water hydrants and water utility hook-ups shall be 28 inches (710 mm) minimum and 36 inches (915 mm) maximum above the ground.*

1011.7 Outdoor Rinsing Showers. *Outdoor rinsing showers shall provide at least one hand-held shower spray unit with a hose 59 inches (1500 mm) long minimum. The hand-held shower spray unit shall have at least one fixed position located 15 inches minimum (380 mm) and 48 inches (1220 mm) maximum above the ground.*

EXCEPTION: *Where vandalism is a consideration, a fixed shower head located at 48 in (1220 mm) above the ground shall be permitted in place of a hand-held shower spray unit.*

1011.8 Viewing Scopes. *Eyepieces on viewing scopes shall be 43 inches (1090 mm) minimum and 51 inches (1295 mm) maximum above the ground.*

1012 Parking Spaces within Camping Units and Picnic Units and Pull-Up Spaces at Dump Stations

1012.1 General. *Parking spaces within* ***camping units*** *and* ***picnic units*** *with mobility features and pull-up spaces for recreational vehicles at dump stations shall comply with 1012.*

1012.2 Recreational Vehicles. *Parking spaces and pull-up spaces for recreational vehicles shall be 20 feet (6100 mm) wide minimum.*

EXCEPTION: *Where two adjacent parking spaces are provided for recreational vehicles, one parking space shall be permitted to be 16 feet (4880 mm) wide minimum.*

1012.3 Other Vehicles. *Parking spaces for vehicles, other than recreational vehicles, shall be 16 feet (4880 mm) wide minimum.*

EXCEPTION: *Where two adjacent parking spaces are provided for vehicles, other than recreational vehicles, one parking space shall be permitted to be 8 feet (2440 mm) wide minimum.*

1012.4 Surface. *The surface of parking spaces and pull-up spaces shall be firm and stable.*

1012.5 Slope*. The slope of the surface of parking spaces and pull-up spaces shall not be steeper than 1:48 in any direction.*

EXCEPTION: *Where the surface is other than asphalt, concrete, or* ***boards****, slopes not steeper than 1:20 shall be permitted when necessary for drainage.*

1012.6 Marking and signage. *Ground marking and signage, if provided, shall comply with 502.1, 502.3.3 and 502.6.*

1013 Tent Pads and Tent Platforms

1013.1 General*. Tent pads and tent platforms shall comply with 1013.*

EXCEPTION: *When an entity determines that a condition in 1019 does not permit full compliance with a specific provision in 1013, the tent pad and tent platform shall comply with the provision to the extent practicable.*

1013.2 Clear Ground Space. *Clear ground space complying with 1013.2 shall be provided on all usable sides of tent pads and tent platforms.*

1013.2.1 Size. *The clear ground space shall be 48 inches (1220 mm) wide minimum.*

1013.2.2 Surface. *The surface of the clear ground space shall be firm and stable. The surface shall allow use of tent stakes and other tent securement devices.*

1013.3 Slope*. The slope of the surface of tent pads, tent platforms, and clear ground spaces shall not be steeper than 1:48 in any direction.*

EXCEPTION: *Where the surface is other than asphalt, concrete, or* ***boards****, slopes not steeper than 1:20 shall be permitted where necessary for drainage.*

1013.4 Height. *Tent platforms shall be 19 inches (485 mm) high maximum measured from the clear ground space to the tent platform surface.*

1014 Camp Shelters

1014.1 General. Camp shelters *shall comply with 1014.*

EXCEPTIONS:

1. *When an entity determines that a condition in 1019 does not permit full compliance with a specific provision in 1014, the* ***camp shelter*** *shall comply with the provision to the extent practicable.*

2. ***Camp shelters*** *shall not be required to comply with 307.*

1014.2 Entrance. Camp shelters *shall provide an* ***entrance*** *complying with 1014.2.1 or 1014.2.2.*

1014.2.1 Transfer Access. *Where transfer access is provided at the* ***entrance*** *to a* ***camp shelter****, the* ***entrance*** *shall comply with 1014.2.1.*

1014.2.1.1 Clear Ground Space. *A clear ground space shall be provided at the* ***entrance*** *to the* ***camp shelter****. The clear ground space shall be 36 inches (915 mm) minimum by 48 inches (1220 mm) minimum and shall be positioned for a parallel approach to the* ***camp shelter****. One full unobstructed side of the clear ground space shall adjoin or overlap an outdoor recreation access route or* ***trail****, as applicable, or another clear ground space.*

1014.2.1.1.1 Surface. *The surface of the clear ground space shall be firm and stable.*

1014.2.1.1.2 Slope. *The slope of the surface of the clear ground space shall not be steeper than 1:48 in any direction.*

EXCEPTION: *Where the surface is other than asphalt, concrete, or* ***boards****, slopes not steeper than 1:20 shall be permitted where necessary for drainage.*

1014.2.1.2 Floor Height. *The* ***camp shelter*** *floor at the* ***entrance*** *shall be 19 inches (485 mm) high maximum measured from the clear ground space.*

1014.2.2 Roll-in Access*. Where roll-in access is provided at the* ***entrance*** *to a* ***camp shelter****, the* ***entrance*** *shall comply with 1014.2.2.*

1014.2.2.1 Level or Sloped Entry Route. Camp shelters *providing roll-in access shall have a level or sloped entry route complying 1016 or 1017, as applicable.*

1014.2.2.2 Turning Space. *A turning space complying with 304.3 shall be provided within the* ***camp shelter****.*

1014.3 Floor. *The floor within* ***camp shelters*** *shall comply with 1014.3.*

1014.3.1 Surface. *The floor surface shall be firm and stable.*

1014.3.2 Slope*. The slope of the floor surface shall not be steeper than 1:48 in any direction.*

EXCEPTION: *Where the floor surface is other than asphalt, concrete, or* ***boards****, slopes not steeper than 1:20 shall be permitted when necessary for drainage.*

1015 Viewing Areas

1015.1 General. Viewing areas *shall comply with 1015.*

EXCEPTION: *In* ***alterations****, when an entity determines that a condition in 1019 does not permit full compliance with a specific provision in 1015, the* ***viewing area*** *shall comply with the provision to the extent practicable.*

1015.2 Clear Ground Space. *A clear ground space shall be provided at each distinct viewing location. The clear ground space shall be 36 inches (915 mm) minimum by 48 inches (1220 mm) minimum and shall be positioned for either a forward or parallel approach to the viewing location. One full unobstructed side of the clear ground space shall adjoin or overlap an outdoor recreation access route or* ***trail****, as applicable, or another clear ground space.*

1015.3 Viewing Space. *Each distinct viewing location shall provide a viewing space adjacent to the clear ground space required by 1015.2 through which the point of interest is viewable. The viewing space shall be 32 inches (815 mm) maximum and 51 inches (1295 mm) minimum high above the ground and shall extend the full width of the clear ground space.*

EXCEPTION: *Guards or similar safety barriers shall be permitted to obstruct the viewing space to the extent the obstruction is necessary for the guard or safety barrier to serve its intended purpose.*

1015.4 Turning Space. *A turning space complying with 304.3 shall be provided within* ***viewing areas****.*

1015.5 Surface. *The surface of clear ground spaces and turning spaces shall be firm and stable.*

1015.6 Slope*. The slope of the surface of clear ground spaces and turning spaces shall not be steeper than 1:48 in any direction.*

EXCEPTION: *Where the surface is other than asphalt, concrete, or* ***boards****, slopes not steeper than 1:20 shall be permitted when necessary for drainage.*

1016 Outdoor Recreation Access Routes

1016.1 General. *Outdoor recreation access routes shall comply with 1016.*

EXCEPTIONS:

1. *In* ***alterations*** *to existing* ***camping facilities****,* ***picnic facilities****, and* ***trailheads****, when an entity determines that a condition in 1019 does not permit full compliance with a specific provision in 1016 on a portion of an outdoor recreation access route, the portion of the outdoor recreation access route shall comply with the provision to the extent practicable.*

2. *At* ***viewing areas****, when an entity determines that a condition in 1019 does not permit full compliance on a portion of an outdoor recreation access route with a specific provision in 1016, the portion of the outdoor recreation access route shall comply with the provision to the extent practicable.*

3. *Where outdoor recreation access routes are provided within* ***vehicular ways****, outdoor recreation access routes shall not be required to comply with 1016.4, 1016.7, and 1016.8.*

1016. 2 Surface. *The surface of outdoor recreation access routes, passing spaces, and resting intervals shall be firm and stable.*

1016.3 Clear Width. *The clear width of outdoor recreation access routes shall be 36 inches (915 mm) minimum.*

1016.4 Passing Spaces. *Outdoor recreation access routes with a clear width less than 60 inches (1525 mm) shall provide passing spaces complying with 1016.4 at intervals of 200 feet (61 m) maximum. Passing spaces and resting intervals shall be permitted to overlap.*

1016.4.1 Size. *The passing space shall be either:*

a. A space 60 inches (1525 mm) minimum by 60 inches (1525 mm) minimum; or

b. The intersection of two outdoor recreation access routes providing a T-shaped space complying with 304.3.2 where the base and the arms of the T-shaped space extend 48 inches (1220 mm) minimum beyond the intersection. Vertical alignment at the intersection of the outdoor recreation access routes that form the T-shaped space shall be nominally planar.

1016.5 Obstacles. *Obstacles on outdoor recreation access routes, passing spaces, and resting intervals shall not exceed 1/2 inch (13 mm) in height measured vertically to the highest point.*

EXCEPTION: *Where the surface is other than asphalt, concrete, or* ***boards****, obstacles shall be permitted to not exceed 1 inch (25 mm) in height measured vertically to the highest point.*

1016.6 Openings. *Openings in the surface of outdoor recreation access routes shall not allow the passage of a sphere more than 1/2 inch (13 mm) in diameter.*

1016.7 Slopes. *The slopes of outdoor recreation access routes shall comply with 1016.7.*

1016.7.1 Maximum Running Slope and Segment Length. *The* ***running slope*** *of any segment of an outdoor recreation access route shall not be steeper than 1:10 (10%). Where the* ***running slope*** *of a segment of an outdoor recreation access route is steeper than 1:20 (5%), the maximum length of the segment shall be in accordance with Table 1016.7.1, and a resting interval complying with 1016.8 shall be provided at the top and bottom of each segment.*

Table 1016.7.1 Maximum Running Slope and Segment Length

Running Slope of Outdoor Recreation Access Route Segment		***Maximum Length of Segment***
Steeper than	***But not Steeper than***	

1:20 (5%)	*1:12 (8.33%)*	*50 feet (15 m)*
1:12 (8.33%)	*1:10 (10%)*	*30 feet (9 m)*

1016.7.2 Cross Slope. *The* ***cross slope*** *shall not be steeper than 1:48.*

EXCEPTION: *Where the surface is other than concrete, asphalt, or* ***boards****,* ***cross slopes*** *not steeper than 1:20 shall be permitted when necessary for drainage.*

1016.8 Resting Intervals. *Resting intervals shall comply with 1016.8.*

1016.8.1 Length. *The resting interval length shall be 60 inches (1525 mm) long minimum.*

1016.8.2 Width*. Where resting intervals are provided within an outdoor recreation access route, resting intervals shall be at least as wide as the widest segment of the outdoor recreation access route leading to the resting interval. Where resting intervals are provided adjacent to an outdoor recreation access route, the resting interval shall be 36 inches (915 mm) wide minimum.*

1016.8.3 Slope. *Resting intervals shall have slopes not steeper than 1:48 in any direction.*

EXCEPTION: *Where the surface is other than concrete, asphalt, or* ***boards****, slopes not steeper than 1:20 shall be permitted when necessary for drainage.*

1016.8.4 Turning Space. *Where resting intervals are provided adjacent to an outdoor recreation access route, a turning space complying with 304.3.2 shall be provided.*
Vertical alignment between the outdoor recreation access route, turning space, and resting interval shall be nominally planar.

1016.9 Protruding Objects. *Constructed* ***elements*** *on outdoor recreation access routes, passing spaces, and resting intervals shall comply with 307.*

1017 Trails

1017.1 General. Trails *shall comply with 1017.*

EXCEPTIONS:

1*.* *When an entity determines that a condition in 1019 does not permit full compliance with a specific provision in 1017 on a portion of a* ***trail****, the portion of the* ***trail*** *shall comply with the provision to the extent practicable.*

2. *After applying Exception 1, when an entity determines that it is impracticable for the entire **trail** to comply with 1017, the **trail** shall not be required to comply with 1017.*

1017.2 Surface. *The surface of **trails**, passing spaces, and resting intervals shall be firm and stable.*

1017.3 Clear Tread Width. *The clear tread width of **trails** shall be 36 inches (915 mm) minimum.*

1017.4 Passing Spaces. Trails *with a clear tread width less than 60 inches (1525 mm) shall provide passing spaces complying with 1017.4 at intervals of 1000 feet (300 m) maximum. Where the full length of a **trail** does not fully comply with 1017, a passing space shall be located at the end of the **trail** segment that fully complies with 1017. Passing spaces and resting intervals shall be permitted to overlap.*

1017.4.1 Size. *The passing space shall be either:*

a. *A space 60 inches (1525 mm) minimum by 60 inches (1525 mm) minimum; or*
b. *The intersection of two **trails** providing a T-shaped space complying with 304.3.2 where the base and the arms of the T-shaped space extend 48 inches (1220 mm) minimum beyond the intersection. Vertical alignment at the intersection of the **trails** that form the T-shaped space shall be nominally planar.*

1017.5 Tread Obstacles. *Tread obstacles on **trails**, passing spaces, and resting intervals shall not exceed 1/2 inch (13 mm) in height measured vertically to the highest point.*

EXCEPTION*: Where the surface is other than asphalt, concrete, or **boards**, tread obstacles shall be permitted to not exceed 2 inches (50 mm) in height measured vertically to the highest point.*

1017.6 Openings. *Openings in the surface of **trails**, passing spaces, and resting intervals shall not allow the passage of a sphere more than 1/2 inch (13 mm) in diameter.*

1017.7 Slopes. *The slopes of **trails** shall comply with 1017.7.*

1017.7.1 Maximum Running Slope and Segment Length. *Not more than 30 percent of the total length of a **trail** shall have a **running slope** steeper than 1:12 (8.33%). The **running slope** of any segment of a **trail** shall not be steeper than 1:8 (12%). Where the **running slope** of a segment of*

*a **trail** is steeper than 1:20 (5%), the maximum length of the segment shall be in accordance with Table 1017.7.1, and a resting interval complying with 1017.8 shall be provided at the top and bottom of each segment.*

Table 1017.7.1 Maximum Running Slope and Segment Length

Running Slope of Trail Segment		***Maximum Length of Segment***
Steeper than	***But not Steeper than***	
1:20 (5%)	*1:12 (8.33%)*	*200 feet (61 m)*
1:12 (8.33%)	*1:10 (10%)*	*30 feet (9 m)*
1:10 (10%)	*1:8 (12%)*	*10 feet (3050 mm)*

1017.7.2 Cross Slope. *The **cross slope** shall be not be steeper than 1:48.*

EXCEPTION: *Where the surface is other than concrete, asphalt, or **boards**, **cross slopes** not steeper than 1:20 shall be permitted when necessary for drainage.*

1017.8 Resting Intervals. *Resting intervals shall comply with 1017.8.*

1017.8.1 Length. *The resting interval length shall be 60 inches (1525 mm) long minimum.*

1017.8.2 Width*. Where resting intervals are provided within the **trail** tread, resting intervals shall be at least as wide as the widest segment of the **trail** tread leading to the resting interval. Where resting intervals are provided adjacent to the **trail** tread, the resting interval clear width shall be 36 inches (915 mm) minimum.*

1017.8.3 Slope. *Resting intervals shall have slopes not steeper than 1:48 in any direction.*

EXCEPTION: *Where the surface is other than concrete, asphalt, or **boards**, **cross slopes** not steeper than 1:20 shall be permitted when necessary for drainage.*

1017.8.4 Turning Space. *Where resting intervals are provided adjacent to the **trail** tread, a turning space complying with 304.3.2 shall be provided. Vertical alignment between the **trail** tread, turning space, and resting interval shall be nominally planar.*

1017.9 Protruding Objects. *Constructed **elements** on **trails**, passing spaces, and resting intervals shall comply with 307.*

1017.10 Trailhead Signs*.* ***Trail*** *information signs at **trailheads** shall include the following:*

*1. Length of the **trail** or **trail** segment;*

2. Surface type;

3. Typical and minimum tread width;

*4. Typical and maximum **running slope**; and*

*5. Typical and maximum **cross slope**.*

1018 Beach Access Routes

1018.1 General. *Beach access routes shall comply with 1018.*

EXCEPTIONS:

1. *When an entity determines that a condition in 1019 does not permit full compliance with a specific provision in 1018 on a portion of a beach access route, the portion of the beach access route shall comply with the provision to the extent practicable.*

2. *After applying Exception 1, when an entity determines that it is impracticable to provide a beach access route complying with 1018, a beach access route shall not be required.*

3. *Removable beach access routes shall not be required to comply with 1018.7, 1018.8, and 1018.10.*

1018.2 Connections. *Beach access routes shall connect an entry point to the beach to the:*

1. High tide level at tidal beaches;

2. Mean high water level at river beaches; or

3. Normal recreation water level at lake, pond, and reservoir beaches.

1018.3 Surface. *The surface of beach access routes and resting intervals shall be firm and stable.*

1018.4 Clear Width. *The clear width of beach access routes shall be 60 inches (1525 mm) minimum.*

EXCEPTION: *At dune crossings, the clear width of beach access routes that are not removable shall be permitted to be reduced to 48 inches (1220 mm) minimum.*

1018.5 Obstacles. *Obstacles on beach access routes and resting intervals shall not exceed 1/2 inch (13 mm) in height measured vertically to the highest point.*

EXCEPTION: *Where the surface is other than asphalt, concrete, or* ***boards****, obstacles shall be permitted to not exceed 1 inch (25 mm) in height measured vertically to the highest point.*

1018.6 Openings. *Openings in the surface of beach access routes and resting intervals shall not allow the passage of a sphere more than 1/2 inch (13 mm) in diameter.*

1018.7 Slopes. *The slopes of beach access routes shall comply with 1018.7.*

1018.7.1 Maximum Running Slope and Segment Length. *The* ***running slope*** *of any segment of a beach access route shall not be steeper than 1:10 (10%). Where the* ***running slope*** *of a segment of a beach access route is steeper than 1:20 (5%), the maximum length of the segment shall be in accordance with Table 1018.7.1, and a resting interval complying with 1018.8 shall be provided at the top and bottom of each segment.*

Table 1018.7.1 Maximum Running Slope and Segment Length

Running Slope of Beach Access Route Segment		***Maximum Length of Segment***
Steeper than	***But not Steeper than***	
1:20 (5%)	*1:12 (8.33%)*	*50 feet (15 m)*
1:12 (8.33%)	*1:10 (10%)*	*30 feet (9 m)*

1018.7.2 Cross Slope. *The* ***cross slope*** *shall not be steeper than 1:48.*

EXCEPTION: *Where the surface is other than concrete, asphalt, or* ***boards****,* ***cross slopes*** *not steeper than 1:20 shall be permitted when necessary for drainage.*

1018.8 Resting Intervals. *Resting intervals shall comply with 1018.8.*

1018.8.1 Size. *Resting intervals shall be 60 inches minimum (1525 mm) by 60 inches (1525 mm) minimum.*

1018.8.2 Slope. *Resting intervals shall have a slope not steeper than 1:48 in any direction.*

EXCEPTION: *Where the surface is other than concrete, asphalt, or* ***boards****,* ***cross slopes*** *not steeper than 1:20 shall be permitted when necessary for drainage.*

1018.9 Protruding Objects. *Constructed* ***elements*** *on beach access routes and resting intervals shall comply with 307.*

1018.10 Dune Crossings. *Where the slope of a beach access route at a dune crossing is steeper than 1:20 (5%), handrails complying with 505 and curbs or barriers shall be provided. The curbs or barriers shall prevent the passage of a 2 inch (50 mm) diameter sphere, where any portion of the sphere is within 2 inches (50 mm) of the crossing surface.*

1019 Conditions for Exceptions

1019.1 General. *Exceptions to specific provisions in 1011, 1013, 1014, 1015, 1016, 1017, and 1018 shall be permitted when an entity determines that any of the following conditions does not permit full compliance with the provision:*

1. Compliance is not practicable due to terrain.

2. Compliance cannot be accomplished with the prevailing construction practices.

3. Compliance would fundamentally alter the function or purpose of the ***facility*** *or the setting.*

4. Compliance is limited or precluded by any of the following laws, or by decisions or opinions issued or agreements executed pursuant to any of the following laws:

- ***Endangered Species Act*** *(16 USC 1531 et seq.);*
- ***National Environmental Policy Act*** *(42 USC 4321 et seq.);*
- ***National Historic Preservation Act*** *(16 USC 470 et seq.);*
- ***Wilderness Act (16 USC 1131*** *et seq.); or*

- *Other federal, state, or local law the purpose of which is to preserve threatened or endangered species; the environment; or archaeological, cultural, historical, or other significant natural features.*

DEPARTMENT OF COMMERCE AND ECONOMIC OPPORTUNITY

NOTICE OF ADOPTED AMENDMENTS

1) Heading of the Part: State Administration of the Federal Community Development Block Grant Program for Small Cities

2) Code Citation: 47 Ill. Adm. Code 110

3)

Section Numbers:	Adopted Actions:
110.10	Amendment
110.20	Amendment
110.30	Amendment
110.40	Amendment
110.50	Amendment
110.60	Amendment
110.80	Amendment
110.90	Amendment
110.91	Amendment
110.92	Amendment
110.93	Amendment
110.94	Repealed
110.95	Repealed
110.101	Repealed
110.102	Repealed
110.103	Amendment
110.104	Amendment
110.106	Amendment
110.110	Amendment

4) Statutory Authority: Implementing Sections 605-940 and 605-945, and authorized by Section 605-95, of the Civil Administrative Code of Illinois [20 ILCS 605/605-940, 605-945 and 605-95]. Authorized by Title I of the Housing and Community Development Act of 1974, as amended (42 USC 5301 et seq.).

5) Effective Date of Rules: October 29, 2018

6) Does this rulemaking contain an automatic repeal date? No

7) Does this rulemaking contain incorporations by reference? No

8) A copy of the adopted rules, including any material incorporated by reference, is on file in the Agency's principal office and is available for public inspection.

DEPARTMENT OF COMMERCE AND ECONOMIC OPPORTUNITY

NOTICE OF ADOPTED AMENDMENTS

9) Notice of Proposal published in the *Illinois Register*: 42 Ill. Reg. 14126; July 27, 2018.

10) Has JCAR issued a Statement of Objection to this rulemaking? No

11) Differences between Proposal and Final Version: Grammatical and stylistic changes were made.

12) Have all the changes agreed upon by the Agency and JCAR been made as indicated in the agreements issued by JCAR? Yes

13) Will this rulemaking replace an emergency rule currently in effect? No

14) Are there any rulemakings pending on this Part? No

15) Summary and Purpose of Rulemaking: The HUD Office of Inspector General Audit Report 2015-CH-1009 Recommendation 1D required the State of Illinois to accomplish the following: "Implement adequate controls to ensure that the Department administers the program in accordance with Federal requirements." To close the Recommendation the JCAR CDBG National Objective and Procurement Standards are proposed to be updated to reflect current federal standards. Additional changes were made to the CDBG economic development grant program. These changes align with federal standards and allow the State to raise the amount of grant funding given per job created and lower the amount granted per job retained. The proposed changes would also allow for private development cost to be paid for with CDBG grant funds rather than limiting those funds to cover only the public infrastructure costs in support of job creation or retention.

16) Information and questions regarding these adopted rules shall be directed to:

Ms. Jolene Clarke
Rules Administrator
Illinois Department of Commerce and Economic Opportunity
500 East Monroe
Springfield IL 62701

217/557-1820

The full text of the Adopted Amendments begins on the next page:

DEPARTMENT OF COMMERCE AND ECONOMIC OPPORTUNITY

NOTICE OF ADOPTED AMENDMENTS

TITLE 47: HOUSING AND COMMUNITY DEVELOPMENT
CHAPTER I: DEPARTMENT OF COMMERCE AND ECONOMIC OPPORTUNITY

PART 110
STATE ADMINISTRATION OF THE FEDERAL COMMUNITY DEVELOPMENT BLOCK GRANT PROGRAM FOR SMALL CITIES

SUBPART A: COMMUNITY DEVELOPMENT BLOCK GRANT PROGRAM

Section
110.10 Legislative Base
110.20 Purpose and Scope
110.30 Definitions
110.35 Incorporation by Reference
110.40 Federal/State Program Objectives
110.50 Eligible Applicants
110.60 Eligible/Ineligible Projects and Activities for CDBG~~CDAP~~ Components
110.70 Grant Application Process
110.80 Funding
110.90 ~~Emergency~~ Set-Aside for Disaster Response~~Public Facilities~~ Component
110.91 General Economic Development Component
110.92 Competitive Public Infrastructure~~Facilities Construction and Design Engineering Component~~
110.93 Competitive Housing Rehabilitation Component
110.94 Competitive Planning Assistance Component (Repealed)
110.95 Non-Competitive Mobility and Accessibility Rehabilitation Services Component (Repealed)
110.100 Application Evaluation for Competitive Public Facilities and Competitive Housing Rehabilitation Components (Repealed)
110.101 Application Evaluation for Competitive Planning Assistance Component (Repealed)
110.102 Pre-Application Determination and Application Evaluation for Non-Competitive Mobility and Accessibility Rehabilitation Services (Repealed)
110.103 Application Evaluation for Competitive Public Infrastructure~~Facilities Construction and Design Engineering~~ Component
110.104 Application Evaluation for Competitive Housing Rehabilitation Component
110.105 Small Business Financing Component (Repealed)
110.106 Demonstration Program: ~~Set-Aside for~~ Emergency Lead-Based Paint Abatement
110.110 Administrative Requirements

DEPARTMENT OF COMMERCE AND ECONOMIC OPPORTUNITY

NOTICE OF ADOPTED AMENDMENTS

110.120 Nondiscrimination
110.130 Complaint Process

SUBPART B: REVOLVING FUNDS

Section
110.210 Purpose
110.220 Definitions
110.230 Recapture Strategy Requirements
110.240 Revolving Fund Administration
110.250 Use of Revolving Funds
110.260 Requirements for Revolving Fund Projects
110.270 Administrative Costs
110.280 Revolving Fund Fundability Analysis
110.290 Revolving Fund Financial Assistance Closings
110.300 Security
110.310 Disbursement of Revolving Funds
110.320 Revolving Fund Monitoring
110.330 Recordkeeping and Reporting
110.340 Department Monitoring
110.350 Evaluation of Performance
110.360 Program Income Subject to the Act

AUTHORITY: Implementing Sections 605-940 and 605-945, and authorized by Section 605-95, of the Civil Administrative Code of Illinois [20 ILCS 605/605-940, 605-945 and 605-95]. Authorized by Title I of the Housing and Community Development Act of 1974, as amended (42 USC 5301 et seq.).

SOURCE: Adopted and codified at 7 Ill. Reg. 2972, effective March 9, 1983; amended at 7 Ill. Reg. 7898, effective June 21, 1983; amended at 8 Ill. Reg. 16250, effective August 29, 1984; amended at 9 Ill. Reg. 7117, effective May 9, 1985; amended at 9 Ill. Reg. 10702, effective June 28, 1985; amended at 10 Ill. Reg. 10093, effective May 28, 1986; amended at 12 Ill. Reg. 2254, effective January 19, 1988; amended at 15 Ill. Reg. 4410, effective March 11, 1991; amended at 16 Ill. Reg. 20106, effective December 14, 1992; amended at 20 Ill. Reg. 7799, effective May 29, 1996; amended at 22 Ill. Reg. 1910, effective January 1, 1998; amended at 23 Ill. Reg. 8362, effective July 12, 1999; amended at 26 Ill. Reg. 11805, effective July 18, 2002; amended at 28 Ill. Reg. 13468, effective September 23, 2004; emergency amendment at 29 Ill. Reg. 4088, effective February 25, 2005, for a maximum of 150 days; amended at 29 Ill. Reg. 10017,

effective June 28, 2005; amended at 38 Ill. Reg. 21323, effective October 30, 2014; recodified 42 Ill. Reg. 14261; amended at 42 Ill. Reg. 19976, effective October 29, 2018.

SUBPART A: COMMUNITY DEVELOPMENT BLOCK GRANT PROGRAM

Section 110.10 Legislative Base

a) Federal

1) On July 31, 1981, Congress passed the Omnibus Budget Reconciliation Act of 1981 (Public Law 97-35). This Act established seven block grant programs, including the State Community Development Block Grant (CDBG) Program. These block grants replace a large number of programs previously administered by the federal government~~Federal Government~~. Although the Housing and Community Development Act of 1974 provided since its inception for discretionary block grants to smaller communities, the Omnibus Budget Reconciliation Act of 1981 made a fundamental change to transfer to the states~~States~~ the power and decision making in awarding block grants to small communities.

2) The State Community Development Block Grant Program funds are allocated to the state~~State~~ pursuant to section~~Section~~ 106(d) of Title I of the federal Housing and Community Development Act of 1974, as amended. The Act authorizes state administration of the program to units of general local governments in nonentitlement areas. Throughout this Part references are made to the provisions of 24 CFR 570. These HUD regulations were published November 9, 1992.

3) While the states~~States~~ must follow the statutory requirements concerning the use of block grant funds, the Secretary of HUD will give maximum feasible deference to a state's~~State's~~ interpretation of these~~such~~ requirements consistent with the Secretary's obligation to enforce compliance with the intent of Congress.

4) Pursuant to 24 CFR 91, the state~~State~~ must submit annually to HUD a Consolidated Plan that serves as the planning document of the state~~State~~ and an application under any of the Community Planning and Development formula grants, including CDBG. The Consolidated Plan will include the application deadlines for the competitive funding

components for the upcoming program year. A final statement and certifications are required to be submitted before March 31 during each year in which a state~~State~~ elects to administer the CDBG~~Community Development Block Grant~~ funds for its nonentitlement areas.

b) Illinois~~State~~

1) On August 10, 1981, the Governor designated the Illinois Department of Commerce and Community Affairs, now known as the Illinois Department of Commerce and Economic Opportunity, as the State administrative agency for the Small Cities Community Development Block Grant Program. On March 23, 1982, the Governor officially notified the U.S. Department of Housing and Urban Development of the State's election to administer the Small Cities Program for nonentitlement communities within the State.

2) As a part of its application, with respect to the CDBG~~Community Development Assistance~~ Program, the State must submit an annual State of Illinois Consolidated Plan Action Plan to HUD outlining the one year use of funds and certifying that it:

A) Engages or will engage in planning for community development activities;

B) Provides or will provide technical assistance to units of general local government in connection with community development programs; and

C) Through the public hearing requirement, has consulted with local elected officials and interested parties/citizens from among units of general local government located in nonentitlement areas of the State determining the method of distribution of CDBG funds.

(Source: Amended at 42 Ill. Reg. 19976, effective October 29, 2018)

Section 110.20 Purpose and Scope

The purpose of this Part is to develop State administrative rules for the administration of the Community Development Block Grant (CDBG)~~Assistance~~ Program ~~(CDAP)~~ within the State of

Illinois. The promulgation of clear-cut program State administrative rules for the CDBG~~Community Development Assistance Program~~ will ensure the maximum and efficient use of funds for community and economic development programs in the State's nonentitlement areas.

(Source: Amended at 42 Ill. Reg. 19976, effective October 29, 2018)

Section 110.30 Definitions

"Act" shall mean section~~Section~~ 106(d) (42 USC 5306(d)) of the Housing and Community Development Act of 1974 (42 USC 5301), as amended by section~~, of Section~~ 304 of Title III of the Omnibus Budget Reconciliation Act of 1981 (PL~~Public Law~~ 97-35) ~~(42 USC 5301)~~.

"Application" shall mean a request for program funds, including the required forms and attachments.

"Application on Behalf Of" shall mean any application submitted by one eligible applicant requesting funds for one or more other eligible applicants.

"Community" shall mean any eligible applicant.

"Community Development Block Grant~~Assistance~~ Program" or "CDBG Program~~CDAP~~" shall mean the State Community Development Block Grant program administered by the Department, authorized by Title I of the Housing and Community Development Act of 1974, as amended (42 USC 5301).

"Department" or "DCEO" shall mean Illinois Department of Commerce and Economic Opportunity.

"Director" shall mean the Director of the Illinois Department of Commerce and Economic Opportunity.

"Economic Development" shall mean job creation/retention and the alleviation of economic distress through the stimulation of private investment and community revitalization.

"Eligible Applicant" shall mean any incorporated municipality, township~~,~~ or county within the State of Illinois, except those designated as entitlement areas by the U.S. Department of Housing and Urban Development.

~~"Eligible Lines of Credit" shall mean committed revolving line of credit facilities that are subject to loan agreements with financial institutions and are structured for the purpose of funding the project. Such agreements shall be satisfactory to the Department and shall be for terms of at least 2 years from the time funds are awarded and in amounts equal to or greater than the resource leveraging amount.~~

"Entitlement City" shall mean a city designated by the Department of Housing and Urban Development to receive an amount of funds ~~which~~ the city is entitled to receive under the CDBG entitlement program ~~Entitlement Grant Program~~, as determined by the formula set forth in section 106 of the Housing and Community Development Act of 1974.

"Entitlement County~~Government~~" shall mean a county designated by the Department of Housing and Urban Development to receive an amount of funds which the county is entitled to receive under the CDBG entitlement program, as determined by formula set forth in section 106 of the Housing and Community Development Act of 1974 (see Public Law 93-383, as amended) ~~a unit of government that is any incorporated community with a population over 50,000 or any county with a population over 500,000~~.

"HUD" shall mean the U.S. Department of Housing and Urban Development.

(Source: Amended at 42 Ill. Reg. 19976, effective October 29, 2018)

Section 110.40 Federal/State Program Objectives

a) In order to ensure that the State administered program complies with the Housing and Community Development Act of 1974, as amended, a CDBG~~CDAP~~ assisted activity must meet one or more of the following national objectives ~~as required by section 104(b)(3) of the Act~~:

1) Benefiting low and moderate-income persons;

2) Aiding in the prevention or elimination of slums and/or blight; or

3) Meeting other community development needs that pose a serious and immediate threat to the health and welfare of the community that are of recent origin or recently became urgent, generally within the previous 18

months.

b) National Objectives

1) To complement these federally mandated national objectives, the State has established the following specific objectives for the CDBG~~Community Development Assistance~~ Program:

A~~1~~) Strengthening community economic development through the creation of jobs, stimulation of private investment, and strengthening of the tax base;

B~~2~~) Alleviation of economic distress and realizing community economic development opportunities of benefit for low- and moderate-income individuals;

C~~3~~) Improvement of public~~Public~~ infrastructure and elimination of conditions that~~which~~ are detrimental to health, safety, and public welfare;

D~~4~~) Conservation and expansion of the State's housing stock in order to provide a decent home and a suitable living environment for persons of low- and moderate-income and persons with disabilities.

2) There are several criteria by which an activity can meet a national objective. Units of general local government should consult the Illinois Community Development Block Grant (CDBG) Grants Management Handbook that explains the three national objectives in detail, including the criteria for meeting each one, and the documentation that must be provided to comply with the HUD requirements.

(Source: Amended at 42 Ill. Reg. 19976, effective October 29, 2018)

Section 110.50 Eligible Applicants

a) Only units of local government may apply for funding. Eligible municipalities shall not receive funding from ~~Municipalities must~~ HUD as an entitlement city~~be less than 50,000 in population~~. Counties and townships that are not participating

in the HUD Urban County Entitlement Program ~~of the U.S. Department of Housing and Urban Development~~ are also eligible to apply for block grant funds.

b) Because of eligibility requirements and administrative capacity, certain unincorporated areas and special districts may not qualify for participation by themselves. In these~~such~~ instances, general purpose units of local government will be allowed to submit applications on behalf of otherwise ineligible special districts and unincorporated areas provided the unit of general local government determines that the activity is meeting its needs in accordance with section~~Section~~ 106(d)(2)(D) of the Housing and Community Development Act of 1974, as amended.

c) When~~In situations where~~ 2 or more eligible local governments face a common problem, a joint application may be submitted under the following conditions:

1) The solution of the problem requires mutual action and is not intended for administrative convenience; and

2) The eligible local governments involved have contacted the Department for prior approval of submission of the joint application~~such an arrangement~~ before actual application submission.

d) An Application on Behalf Of or a joint application may not be filed for an entitlement city or a city located in an entitlement county.

e) If~~In the event that either~~ an Application on Behalf Of or a joint application will be filed, the local governments involved must submit an executed cooperation agreement with the ~~its~~ application for funds. The agreement shall ~~that~~ define grantee responsibilities under a~~, should the application be~~ successful application.

(Source: Amended at 42 Ill. Reg. 19976, effective October 29, 2018)

Section 110.60 Eligible/Ineligible Projects and Activities for CDBG~~CDAP~~ Components

a) Eligible Projects and Activities
Eligible activities are detailed in 24 CFR 570.482 (2004). Listed in this subsection (a) below are program components that describe eligible projects and activities that may be funded through CDBG~~CDAP~~:

1) General Economic Development Component. Provision of financial assistance to private for-profit or not-for-profit businesses for such activities as land acquisition; public facilities and improvements in support of economic development (such as, water, sewer and utility lines); acquisition, construction and~~,~~ rehabilitation of commercial and industrial buildings/facilities; machinery and equipment; furnishings and fixtures; and working capital expenses.

2) Competitive Public Infrastructure Program~~Facilities Construction and Design Engineering~~ Component. Provision of financial assistance for acquisition, construction, reconstruction, rehabilitation or installation of public facilities, and improvements (e.g., water and sewer facilities, including storm sewers,~~;~~ flood retention and drainage facilities).

3) Competitive Housing Rehabilitation Program Component. Provision of financial assistance in support of low- to moderate-income housing, including rehabilitation, clearance, demolition, and/or removal of privately-owned buildings and provision of site improvements such as connection of residential structures to water or sewer lines; certain types of housing modernization; temporary relocation assistance; code enforcement; and lead-based paint abatement.

~~4) Non-Competitive Mobility and Accessibility Rehabilitation Services Component. Provision of financial assistance includes structural improvements to privately-owned buildings to remove physical barriers that restrict the mobility and accessibility of elderly and disabled persons in order to comply with the Illinois Accessibility Code (71 Ill. Adm. Code 400), e.g., modifications to entrances and exits, parking improvements, modification of bathroom and kitchen facilities.~~

~~5) Competitive Planning Assistance Component. Provision of financial assistance includes planning activities that focus on the needs of low- and moderate-income persons in the community, including feasibility studies, data gathering, analyses, preparation of plans, and identification of implementing actions.~~

4~~6~~) Disaster Response~~Emergency Set-Aside for Public Facilities~~ Component. Provision of financial assistance includes acquisition, demolition, construction, reconstruction, rehabilitation or installation of public

facilities, and improvements (e.g., water and sewer facilities, including storm sewers, flood retention and drainage facilities), and housing rehabilitation in areas affected by a Governor-declared disaster.

b) Activity Delivery~~Eligible Program Planning and Administration Costs~~
With respect to subsection (a), activity delivery~~program planning and administration~~ costs are allowable costs for designated programs and eligible ~~projects and~~ activities under the CDBG Program~~CDAP~~. Eligible costs are necessary to complete the local management process of a CDBG grant. This includes, but is not limited to, such costs as salaries, travel costs, services performed under third party contracts, including legal and audit services, environmental review, additional fidelity bonding costs, or other services required for the delivery of grant activities. ~~for general program planning and administration include local government operational costs of implementing a local program. It includes costs involved in preparing the environmental review; preliminary engineering, planning, and design fees for the project; the cost of the local program audit; and other contractual costs for professional services that are associated with the administration of the program.~~ Eligible costs exclude ~~It excludes~~ all pre-program costs, such as payment or reimbursement of application preparation fees, costs associated with conducting a local survey, etc.~~ There is a 10% ceiling placed on general program planning and administration costs for any local program.~~

c) Ineligible Projects and Activities

1) Generally, any type of activity not described or referred to in subsection~~Section 110.60~~(a) is considered ineligible.

2) The following is a selective list of examples of projects and activities that are generally ineligible: buildings used predominantly for the general conduct of government (e.g., city halls, courthouses, jails, police stations, etc.). However, if the Department of Natural Resources~~Illinois Historic Preservation Agency~~ requires historic preservation renovations to a project, those renovations will be deemed eligible expenses. The following are generally ineligible: general ~~General~~ government expenses; political activities; purchase of construction equipment; and purchase of equipment, fixtures, motor vehicles, furnishings, or other personal property not an integral structural fixture~~ is generally ineligible~~. However, CDBG~~CDAP~~ funds may be used to purchase or to pay depreciation or use

allowances for otherwise ineligible~~such~~ items when necessary, if the administration of activities was assisted with CDBG~~CDAP~~ funds. The costs associated with operating and maintaining public facilities and services are generally ineligible. New housing construction is ineligible, except as provided under the last resort housing provision set forth in 49 CFR 24 (2004)~~,~~ or~~,~~ when that construction is carried out by a subgrantee pursuant to 24 CFR 570.204(a)(2) (2004); also ineligible are income payments for housing or any other purpose (e.g., income maintenance, housing allowances, down payments, mortgage subsidies, etc.). All activities as listed in 24 CFR 570.482 (2004) and section 105(a) of the Act are eligible.

(Source: Amended at 42 Ill. Reg. 19976, effective October 29, 2018)

Section 110.80 Funding

a) Distribution of Funds~~:~~
Grant awards will be made according to the application evaluation processes described in Sections 110.91, 110.92, 110.93, 110.94, 110.95, 110.101, 110.102, 110.103~~,~~ and 110.106~~ of this Part~~.

b) Funding Considerations

1) Grant Ceilings.~~:~~ Grant ceilings for the various components listed in Section 110.60~~ of this Part~~ establish the maximum grant award limits that an eligible applicant may request. Needs expressed by interested citizens and local elected officials (see Section 110.10(b)(2)(C)), the amount of annual allocation, and a review of past program component usage shall be factors in the Department's determination of the grant ceiling on an annual basis.~~The Department shall utilize the factors listed in subsection (b)(1)(D) of this Section in authorizing a higher grant ceiling for a particular project. Grants will only be funded in amounts commensurate with the requirements of the proposed projects. The Department will set the following grant ceilings for eligible applicants:~~

~~A)~~	~~Components~~	~~Grant Ceiling~~
	~~i)~~ ~~General Economic Development Component~~	~~$750,000~~

~~ii)~~	~~Competitive Public Facilities Construction and Design Component~~	
	~~Construction~~	~~$400,000~~
	~~Design Engineering~~	~~$200,000~~
~~iii)~~	~~Competitive Housing Rehabilitation Program Component~~	~~$400,000~~
~~iv)~~	~~Non-Competitive Mobility and Accessibility Rehabilitation Services Component~~	~~$100,000~~
~~v)~~	~~Competitive Planning Assistance Component~~	~~$25,000~~
~~vi)~~	~~Emergency Set-Aside for Public Facilities Component~~	~~$100,000~~
~~vii)~~	~~Set-Aside for Lead-based Paint~~	~~$50,000~~

A~~B~~) Eligible applicants may only submit one application and may only receive one grant in any one program year under competitive~~the following~~ program components: ~~Competitive~~ Public Infrastructure and ~~Facilities Construction; Design Engineering; Competitive~~ Housing Rehabilitation~~; and Competitive Planning Assistance in any one program year. Under the Non-Competitive Mobility and Accessibility Rehabilitation Services Component and subject to available funding, an eligible applicant may submit more than one application and may receive more than one grant, which will be awarded on a first-come-first served basis~~.

B~~C~~) On occasion, the Department will review the technical feasibility of a project. If the review requires non-Departmental expertise (e.g., water and sewer permits), the Department will coordinate with other agencies (e.g., Environmental Protection Agency (EPA), Department of Public Health (DPH), USDA Rural Development) to review the technical feasibility of the project.

C~~D~~) In determining the appropriate grant award amount, the Department shall consider the following:

i) Project Need: Project need shall be determined using standards found in Sections 110.90(b)(3); 110.91(b)(3)(A), (C), (D)~~,~~ and (E); 110.92(b)(3); 110.93(b)(3); 110.94(b)(3); 110.95; 110.101(b); 110.102; and 110.103(b), as applicable.

ii) Ability to Carry Out the Project: Determination of the ability to successfully complete the proposed project shall be based upon elements such as previous program performance, experience, and scope of the proposed program.

iii) Proposed Activities: A review of the proposed activities shall be based on a determination of whether the program objectives will be met through the proposed activities as set out in Sections 110.90, 110.91, 110.92, 110.93, 110.94~~,~~ and 110.95.

D~~E~~) The Department may withdraw, suspend or terminate grant funding based on the following:

i) If the Department approves an application~~,~~ but, prior to the execution of a Grant Agreement, it learns or has a reasonable belief that the project will not progress or is unlikely to be completed as originally anticipated, due to unforeseen facts and circumstances not previously known during or subsequent to the application process, it may withdraw its commitment of funds. If the Department withdraws its commitment of funds, it shall provide written notification to the applicant advising it of the withdrawal~~same~~ and setting forth the reasons for the withdrawal.

ii) If the Department approves an application and a Grant Agreement has been executed, the Department may only suspend or terminate the Grant Agreement in accordance with the terms and conditions set forth in the Grant Agreement or the conditions described in 47 Ill. Adm. Code 1.110.

2) Standards for Program Category Allocation~~:~~
The Department shall determine the amount of funds annually allocated to carry out activities in accordance with each of the community development assistance program components. Needs expressed by interested citizens and local elected officials pursuant to Section 110.10(b)(2)(C)~~ of this Part~~, the amount of annual allocation, and a review of past program component usage shall be factors in determining the amount of funds annually allocated to carry out activities. The allocation of funds between program components shall be determined from the following allocation ranges:

A) Disaster Response~~Emergency Set-Aside for Public Facilities~~: 1% through ~~-~~20%

B) Competitive Housing Rehabilitation Program Component: 15% through ~~-~~70%

C) Competitive Public Infrastructure~~Facilities Construction and Design Engineering~~ Component: 40% through ~~-~~60%

D) General Economic Development Component: 10% through ~~-~~40%

~~E) Competitive Planning Assistance: up to 1%~~

E~~F~~) Set-Aside for Lead-Based Paint Abatement: up to 5~~1~~%

~~G) Non-Competitive Mobility and Accessibility Rehabilitation Services Component: 1% - 10%~~

3) Environmental Reviews~~Clearances:~~
Upon actual grant award, for non-economic development projects, and during or after application review of economic development projects~~if required~~, a technical environmental record review of project~~non-exempt~~ activities must be completed by the awarded community under 24 CFR 58 (1996). HUD has published Environmental Review Procedures for the Community Development Block Grant (24 CFR 58).

4) On-Site Visits~~:~~

The Department's program staff may, contingent upon program resources or the need for on-site inspection, verify eligibility, conduct field visits of potential grantees under the Competitive Public Infrastructure Program~~Facilities Construction and Design Engineering,~~ and Competitive Housing Rehabilitation Program Components~~, and Non-Competitive Mobility and Accessibility Rehabilitation Services components~~ prior to final grant decisions.

(Source: Amended at 42 Ill. Reg. 19976, effective October 29, 2018)

Section 110.90 Set-Aside for Disaster Response~~Emergency Public Facilities~~ Component

Certain types of conditions, such as natural disasters or other unique circumstances, e.g., loss of infrastructure due to construction, environmental incidents such as oil spills, ruptured public utility lines, etc., do not lend themselves well to a designated (yearly or quarterly) application cycle. In response to CPD Notice 17-06, this as-needed program is designed for communities affected by an unforeseen event resulting in a State Disaster Declaration by the Governor of the State of Illinois ~~In order to better respond to severe public works problems funds will be made available~~ on an "as needed" basis. There is no application deadline for this set-aside.~~ Awards could be made to communities that are faced with an immediate threat to health and safety.~~ If no situations arise that~~which~~ warrant this type of assistance, the set-aside funds will be reallocated at the end of the program year~~ to the competitive public facilities component~~.

a) Project Eligibility Criteria – For a project to be eligible for funding under this component, applicants must document the following:

1) A national objective~~At minimum, 51% of those benefiting from the project will be low-to moderate-income persons~~ (as defined in Section 110.40~~30 of this Part~~) must be met by the project.

2) At minimum, 25% of project costs will be paid from other non-Department~~department~~ funds. Examples of other funding sources may include USDA Rural Development, EPA or local funds. The ~~After the project is completed, the~~ grantee may request, in writing, that the 25% minimum leverage requirement be waived. This request must include a reasonable justification~~, which would include, but not be limited to, instances where the actual total project cost was less than originally estimated, resulting in the return of a relatively small amount of CDAP grant funds in order to meet the 25% minimum~~. The Department shall

review each request on a case-by-case basis.

3) A serious and urgent threat to the health and safety of community residents exists, i.e., a serious deficiency exists ~~in a community public facility (or that the community lacks the facility entirely),~~ and problems clearly attributable to the deficiency have occurred from an unforeseen event resulting in a State Disaster Declaration by the Governor of the State of Illinois~~such as serious illness, disease outbreak, or serious environmental pollution. The community must substantiate that the situation was unforeseen~~.

~~4) The project is ready to proceed and expend funds and the project addresses the identified problem.~~

4~~5~~) A financial need for grant assistance in order to address the identified problem.

b) Application Review and Approval

1) Funds will be made available on an as needed basis through a noncompetitive process until all funds are obligated.

2) Applications shall be prepared and submitted to the Department as specified in Section 110.70~~ of this Part~~.

3) Applications shall be reviewed in accordance with Section 110.103~~ of this Part~~.

(Source: Amended at 42 Ill. Reg. 19976, effective October 29, 2018)

Section 110.91 General Economic Development Component

The general economic development component is available to assist communities to attract or expand private businesses. The program provides financial assistance in the form of a grant~~at or below prevailing rates for comparable private market instruments~~ to private businesses ~~projects~~ that create or retain jobs primarily for low- to moderate-income workers. ~~The financial assistance terms shall be flexible and consistent with the terms of comparable private market instruments.~~ Public infrastructure grants may also be made to support a private business that creates or retains jobs primarily for low- to moderate-income workers. This assistance can

benefit both private "for-profit" and "not-for-profit" organizations.~~ Grantees may administer and service financial assistance through various Financial Intermediary Agreements for either recipients or subgrantees.~~ Funds will be made available on an as needed basis on a noncompetitive process until all funds are obligated.

a) Project Eligibility Criteria – For a project to be eligible for funding under this component, applicants must document the following:

1) At minimum, 51% of those benefiting from the project will be low- to moderate-income persons (as defined in Section 110.30~~ of this Part~~).

A) The benefit of job creation shall be documented in either one of two ways:

i) Obtaining and keeping on file for verification the Family Income Verification Form that~~which~~ includes an employee's social security number, signature and family income; or

ii) Accepting employment referrals from the Illinois Employment and Training Center.

B) The benefit of the job retention of existing employees shall be documented by completing a Family Income Verification Form for each employee. These forms must be submitted at the time of application.

2) The financial feasibility of the project and how program objectives will be met through proposed activities. Participating businesses must submit supporting financial data.

3) If a start-up project is proposed, a 20% commitment of equity included in the leveraging, unless waived by the Director for good cause shown. Good cause may include, but is not limited to, cases in which CDBG~~where CDAP~~ funds are used for the construction or rehabilitation of public infrastructure, when~~where~~ the equity requirement would work an unreasonable hardship upon the applicant, when~~where~~ the loan is sought by a minority enterprise, when~~where~~ other conditions of the financial assistance are so firmly supported that the equity requirement is not

necessary, or when~~where~~ the need for job creation in the geographical area far exceeds the relative security offered by the 20% equity requirement.

4) For public infrastructure projects in support of economic development, when the improvements are to take place in an area that is residential in character, that the area is comprised of at least 51% low- to moderate-income persons.

b) Application Review and Approval

1) Funds will be made available on an as needed basis throughout the year.

2) Applications shall be prepared and submitted to the Department as specified in Section 110.70~~ of this Part~~. Complete applications shall be reviewed and evaluated by Department staff. Applicants shall be notified of deficiencies and given the opportunity to correct the~~such~~ deficiencies through submission of additional documentation.

3) The evaluation of projects shall be conducted to assure compliance with 24 CFR 570.203 (2004) and shall also address the following criteria:

A) Project Need – Need for and use of program funds should be detailed.~~ This evaluation shall include a review of all sources and uses of funds and an analysis of the recipient's or subgrantee's ability to comply with the terms of the Financial Assistance Agreement and the need for and extent of public funding.~~

B) Project Readiness – The applicant must demonstrate project readiness through a description of all activities. This shall include commitment from all lenders and investors, signed and dated.

C) Financial Evaluation – The company's financial statements for the past three years and two projected statements of financial condition shall be reviewed to determine: liquidity/debt coverage; ability of the company to manage debt; business trends; and projected earnings. This data shall be compared to similar data for companies in the same industry using the "RMA Annual Statement Studies" published by Risk Management Association, One Liberty Plaza, 1650 Market, Suite 2300, Philadelphia PA 19103 (1999-

2000), or a comparable source if that~~such~~ industry is not evaluated by this source. Financial statements are not required for public facilities in support of economic development.

D) Commitment for Job Creation/Retention – Firm written assurances from the company must identify the number of jobs created/retained in a specified period of time and the specific number that shall be low- to moderate-income and the methodology to be used to document low- to moderate-income benefit. This review shall also include a determination of the numbers of jobs created/retained in relation to the amount of program funds. The investment per job shall not exceed $10,000~~15,000~~ per job for any job that is retained and $25,000 per job for any job that is created.

E) Resource Leveraging – The ratio of other (non-Department) funds to total CDBG~~CDAP~~ funds being invested in the project will be considered. The evaluation threshold is a 2:1 ratio. The CDBG~~CDAP~~ investment shall not exceed a 1:1 ratio.

(Source: Amended at 42 Ill. Reg. 19976, effective October 29, 2018)

Section 110.92 Competitive Public Infrastructure~~Facilities Construction and Design Engineering Component~~

The competitive public infrastructure~~facilities~~ component is designed to fund public infrastructure~~facilities~~ projects that propose to alleviate a serious threat to public health and safety. Applicants must demonstrate that a serious deficiency exists with an emphasis upon helping persons of low- to moderate-income. Applications are due on an annual basis.

a) Project Eligibility Criteria – For a project to be eligible for funding under this component, applicants must document the following:

1) At minimum, 51% of those benefiting from the project will be low to moderate-income persons (as defined in Section 110.30)

~~2) At minimum, 25% of project costs will be paid from other non-department funds. Examples of other funding sources may include USDA Rural Development, EPA, or local funds. After the project is completed, the~~

~~grantee may request, in writing, that the 25% minimum leverage requirement be waived. This request must include a reasonable justification, which would include, but not be limited to, instances where the actual total project cost was less than originally estimated, resulting in the return of a relatively small amount of CDAP grant funds in order to meet the 25% minimum. The Department shall review each request on a case-by-case basis.~~

2~~3~~) A serious and urgent threat to the health and safety of community residents exists, i.e., a serious deficiency exists in a community public facility (or that the community lacks the facility entirely), and problems clearly attributable to the deficiency have occurred, such as serious illness, disease outbreak, or serious environmental pollution.

3~~4~~) The project is ready to proceed and expend funds and the project addresses the identified problem.

b) Application Review and Approval

1) Applications will be accepted once a year on a due date established at the beginning of the program year pursuant to Section 110.10(a)(4)~~ of this Part~~.

2) Applications will be prepared and submitted to the Department as specified in Section 110.70~~ of this Part~~.

3) Applications will be reviewed in accordance with Section 110.103~~ of this Part~~.

(Source: Amended at 42 Ill. Reg. 19976, effective October 29, 2018)

Section 110.93 Competitive Housing Rehabilitation Component

The competitive housing rehabilitation component targets projects proposing to rehabilitate existing housing stock. The purpose is to provide decent, safe~~,~~ and sanitary housing in conformity with local housing codes for low- to moderate-income persons.~~ Applicants may apply for up to $400,000 in Competitive Housing Rehabilitation funds.~~

a) Project Eligibility Criteria: For a project to be eligible for funding under this

component, applicants must document the following:

1) Program funds used in the rehabilitation of a residence will benefit 100% low- to moderate-income persons.

~~2) At minimum, 20% of project costs will be paid from other non-Department funds. Examples of other funding sources may include USDA Rural Development, Illinois Housing Development Authority (IHDA), local (in-kind), or property owners, except for accessibility projects that will not be required to provide leverage.~~

2~~3~~) That a project plan is presented that~~which~~ documents selection of the area targeted for assistance.

3~~4~~) The project is ready to proceed and expend funds and the project addresses the identified problem.

b) Application Review and Approval

1) Applications will be accepted once a year on a due date established at the beginning of the program year, pursuant to Section 110.10(a)(4)~~ of this Part~~.

2) Applications will be prepared and submitted to the Department as specified in Section 110.70~~ of this Part~~.

3) Applications will be reviewed in accordance with Section 110.104~~ of this Part~~.

(Source: Amended at 42 Ill. Reg. 19976, effective October 29, 2018)

Section 110.94 Competitive Planning Assistance Component (Repealed)

~~The competitive planning assistance component is designed to fund planning-type projects which are construction-oriented. Projects must assist primarily persons of low- to moderate-income. Applications are due on an annual basis.~~

~~a) Project Eligibility Criteria – For a project to be eligible for funding under this component, applicants must document the following:~~

~~1) The project will benefit a minimum of 51% of low- to moderate-income persons (as defined in Section 110.30) or will benefit an eligible group of the population under a limited clientele activity (as defined in Section 110.30).~~

~~2) The planning activity will address an existing construction-oriented water or sanitary or storm sewer problem within the community.~~

~~3) In general, planning activities include studies, data gathering, identification of implementing actions, analyses, and preparation of specific plans.~~

~~4) The proposed project can be accomplished in a reasonable timeframe and consideration has been given to what resources are necessary to complete the project.~~

~~b) Application Review and Approval~~

~~1) Applications will be accepted once a year on a due date established at the beginning of the program year pursuant to Section 110.101 of this Part.~~

~~2) Applications will be prepared and submitted to the Department as specified in Section 110.70 of this Part.~~

~~3) Applications will be reviewed in accordance with Section 110.101 of this Part.~~

(Source: Repealed at 42 Ill. Reg. 19976, effective October 29, 2018)

Section 110.95 Non-Competitive and Accessibility Rehabilitation Services Component (Repealed)

~~The Non-Competitive Mobility and Accessibility Rehabilitation Services (MARS) component targets projects to provide structural improvements to remove physical barriers that restrict mobility and accessibility of elderly and disabled persons. Eligible applicants may apply for up to $100,000 in funds to provide structural improvements to remove physical barriers that restrict mobility of elderly and disabled persons.~~

~~a) Project Eligibility Criteria: For a project to be eligible for funding under this component, applicants must document the following:~~

~~1) Program funds will be used in the rehabilitation of a residence that will benefit 100% low- to moderate-income persons; and~~

~~2) The project is ready to proceed and expend funds and the project addresses the identified problem.~~

~~b) Eligible Activities that include: Structural improvements to a privately owned building that are required to comply with the Illinois Accessibility Code (71 Ill. Adm. Code 400), which include, but are not limited to, modifications to entrances/exits, parking improvements, kitchen and bathroom modifications, etc.~~

~~c) Pre-Application and Eligibility~~

~~1) Pre-applications will be accepted on a first come-first served basis based upon the Department's receipt of the State's federal formula allocation for the Small Cities Community Development Block Grant funds as described in Section 110.10(a)(4) of this Part.~~

~~2) Pre-applications will undergo an initial review to determine eligibility in four areas:~~

~~A) Compliance with the public hearing requirements;~~

~~B) Certification of submission to the Illinois Historic Preservation Agency for clearance of identified housing units;~~

~~C) Certification of eligibility for identified households; and~~

~~D) Cost estimates for rehabilitation for each housing unit identified for assistance.~~

~~d) Application Review and Approval~~

~~1) After the Department determines that an applicant is eligible, it will forward an application to the eligible applicant, which shall be completed and submitted to the Department as required in Section 100.70 of this Part.~~

~~2) Applications will be funded after the Department verifies that the documents submitted are complete and accurate. The following is the information and documentation that the applicant must submit.~~

~~A) Local council resolution of support;~~

~~B) Submittal letter signed by the chief elected official stating that 100% of low- to moderate-income will benefit from the project;~~

~~C) Illinois Historic Preservation Agency clearance letters on the identified housing units;~~

~~D) A copy of all bids received for each housing unit with lowest responsive bid identified, including a statement of the lowest bidder's qualifications;~~

~~E) Verification of eligibility of the identified household;~~

~~F) Application project information form;~~

~~G) Housing fact sheet;~~

~~H) Local government certifications;~~

~~I) Grantee/recipient disclosure certification;~~

~~J) Minority benefit/affirmation housing statement; and~~

~~K) Housing project design.~~

(Source: Repealed at 42 Ill. Reg. 19976, effective October 29, 2018)

Section 110.101 Application Evaluation for Competitive Planning Assistance Component (Repealed)

~~a) Explanation of Application Ranking System~~
~~Applicants will compete in a formalized ranking system. Applications will be ranked in 4 areas: Problem Statement, Project Strategy, Work Plan/Budget, and~~

~~Benefit to Low- and Moderate-Income Persons. The Department will review applications for ranking and selection according to the criteria described in this Section. The Department will then select projects for funding out of the top-ranking projects as determined under subsection (b)(2) until all available funds are expended.~~

~~b) Criteria for Selection of Projects~~

~~1) The analysis will evaluate project need, according to its impact on program benefit and benefit to low- and moderate-income persons utilizing the ranking system contained in subsection (c).~~

~~2) Comparative Assessment of Applications~~

~~A) The Department will initially screen and identify top ranking CDAP applications. Projects will be ranked in the categories of maximum, moderate, minimum, or no rating as described in subsection (c). Maximum ratings do not guarantee that a project will receive funding. The Department will then conduct intensive evaluations, leading to the CDAP grant award decisions. Department staff will analyze project characteristics including:~~

~~i) a comparative assessment of projects – e.g., low- and moderate-income benefits, local contribution, etc.;~~

~~ii) a verification of submitted application information;~~

~~iii) a thorough analysis of the project's readiness to proceed; and~~

~~iv) a determination of the applicant's previous efforts to address its problems.~~

~~B) Actual funding levels will relate closely to the competitiveness of the proposed projects. Applications will be comparatively ranked according to the criteria described in this subsection (b) to help determine the final funding levels. The Department reserves the right to negotiate the final funding figures.~~

~~c) Ranking Criteria~~

~~1) Impact on Planning Needs~~

~~A) An application shall receive a maximum rating if it has fully:~~

~~i) Identified a specific problem and its cause or source, including information on persons affected, long-term consequences if no action is taken, and local efforts that have taken place to solve it.~~

~~ii) Proposed a strategy which will lead to completion of the planning activity, including discussion of why it is the most appropriate approach and how it will benefit primarily low- to moderate-income persons.~~

~~iii) Outlined specific activities, timeframes, costs, responsible parties, and outcomes, including an explanation of how they were determined and how the timeframe and budget are reasonable and appropriate.~~

~~B) An application shall receive a moderate rating if the project only "moderately" addresses the criteria or does not fully meet any one of the criteria in subsection (c)(1)(A).~~

~~C) An application shall receive a minimum rating if the project only "minimally" addresses the criteria or does not fully meet any one of the criteria in subsection (c)(1)(A).~~

~~D) An application shall receive a "no rating" if it fails to fully meet the standards in subsection (c)(1)(A).~~

~~2) Benefit to Low- and Moderate-Income Persons~~

~~A) A maximum rating shall be received if 71-100 percent of the persons benefiting are low- to moderate-income.~~

~~B) A moderate rating shall be received if 61-70 percent of persons benefiting are low- to moderate-income.~~

~~C) A minimum rating shall be received if 51-60 percent of persons benefiting are low- to moderate-income.~~

~~D) No benefit rating shall be received if fewer than 51 percent are low- to moderate-income persons.~~

(Source: Repealed at 42 Ill. Reg. 19976, effective October 29, 2018)

Section 110.102 Pre-Application Determination and Application Evaluation for Non-Competitive Mobility and Accessibility Rehabilitation Services (Repealed)

~~a) Pre-application: Non-entitlement units of local government, after determining and identifying households needing MARS assistance, shall contact the Department's Housing Manager either by written correspondence or telephone to determine whether MARS funds are available. If sufficient funds are available for the potential projects, the Department shall forward a pre-application to the unit of local government. When the Department forwards the pre-application to the unit of local government, it will date-stamp the pre-application and advise the unit of local government that it has 30 calendar days to complete the pre-application and return it to the Department, together with the required forms and documentation. In the event the unit of local government fails to return the pre-application and the required documents within 30 days after of the date-stamp, the pre-application will be considered null and void and the unit of local government will have to reinitiate the pre-application process as outlined in this Section.~~

~~b) Submission of Pre-application: When an eligible applicant submits its pre-application to the Department, the Department will date-stamp the pre-application and its attachments. Within 5 business days after receipt, the Department will review the pre-application for compliance. Upon verifying compliance, the Department will send an application to the unit of local government and the requested funds will be temporarily earmarked for the project. Thereafter, the unit of local government will have 30 calendar days to complete and submit its application to the Department. In the event that the unit of local government fails to submit a sufficient pre-application, the Department will return the pre-application and allow the unit of local government 15 calendar days from the date of the Department's deficiency determination letter to cure any deficiencies and resubmit the pre-application. In the event the unit of local government fails to timely cure any and all deficiencies in its pre-application, the Department will~~

~~deem the pre-application null and void and return it to the unit of local government. If the unit of local government chooses to reinitiate the pre-application process, it must follow the pre-application process as outlined in subsection (a).~~

~~c)~~ ~~Submission of Application: Within 5 business days after receipt of the application, the Department shall review the application for completeness and accuracy. If the application is deemed complete, the Department's Housing Manager shall approve the application and initiate the Department's grant award process. The grant award process includes a Grant Agreement prepared by the Department and sent to the unit of local government for review and execution. In the event the application is deemed insufficient, the unit of local government will have 15 calendar days from the date of the Department's deficiency determination letter to cure any and all deficiencies and resubmit the application before it is deemed null and void. If the application is deemed null and void, the MARS funds earmarked for the project will be released and the unit of local government will have to reinitiate the pre-application process as outlined in subsection (a) to be reconsidered for funding for the project.~~

(Source: Repealed at 42 Ill. Reg. 19976, effective October 29, 2018)

Section 110.103 Application Evaluation for Competitive Public Infrastructure ~~Facilities Construction and Design Engineering~~ Component

a) Explanation of Application Ranking System

1) Applicants will compete in a formalized ranking system. Applications will undergo a multi-person~~an initial~~ review to determine eligibility in 3~~4~~ areas: Benefit to Low- and Moderate-Income Persons, Documentation of Threat to Health and Safety, and Evidence of Project Readiness~~ and Leverage Funds~~. Upon meeting the minimum eligibility thresholds, applications will compete in a formalized ranking system.

2) Applications will be ranked according to the criteria established in the Department's annual Action Plan approved by HUD. The Action Plan is annually provided for public comment for a period of 30 days~~in 4 areas: Community Need, Urgency of Need, Need for Financial Assistance and Benefit to Low- and Moderate-Income Persons~~. The Department will review applications for ranking and project selection according to the

criteria described in this Section. The Department will then select projects for funding out of the top-ranking projects, as determined under subsection (b)(2), until all available funds are expended.

b) Criteria for Selection of Projects

1) The analysis will evaluate project need, according to its impact on program benefit and benefit to low- to moderate-income persons utilizing the ranking system contained in subsection (d).

2) Comparative Assessment of Applications

A) The Department will screen and identify top ranking CDBG ~~CDAP~~ applications. Projects will be ranked in categories of maximum, moderate, minimum~~,~~ or no rating as described in subsection (d). Maximum ratings do not guarantee that a project will receive funding. The Department will then conduct intensive evaluations, leading to the CDBG~~CDAP~~ grant award decision. Department staff may conduct field visits and will analyze project characteristics, including:

i) a comparative assessment of projects – e.g., low- to moderate-income benefits, local contribution, etc.;

ii) a verification of submitted application information;

iii) a thorough analysis of the project's readiness to proceed; and

iv) a determination of the applicant's previous efforts to address its problems.

B) Actual funding levels will relate closely to the competitiveness of the proposed projects. Applications will be comparatively ranked according to the criteria described in this subsection (b) to determine the final funding levels. The Department reserves the right to negotiate the final funding figures.

c) Eligibility Thresholds

1) Benefit to Low- and Moderate-Income Persons: Applications must document that the project will benefit at least 51% low- to moderate-income persons and that, as applicable, no special assessments will be levied against residential structures owned and occupied by low- and moderate-income persons and that provisions are made to hook up these residences to water and sewer systems. Applications that ~~which~~ do not document benefit to low- to moderate-income persons will not be considered further.

2) Documentation of Threat to Health and Safety: Applications must include documentation verifying that the project addresses a threat to health and safety. Applications that~~which~~ do not document threat to health and safety will not be considered further.

3) Evidence of Project Readiness: Applications must demonstrate that the project is appropriate and achievable and that all actions have been completed to ensure timely implementation of the project. Applications that~~which~~ do not document project readiness will not be considered further.

~~4) Leverage Funds: Applications must provide evidence that at least 25% of non-administrative project costs will be provided from non-CDAP sources. After the project is completed, the grantee may request, in writing, that the 25% minimum leverage requirement be waived. This request must include a reasonable justification, which would include, but not be limited to, instances where the actual total project cost was less than originally estimated, resulting in the return of a relatively small amount of CDAP grant funds in order to meet the 25% minimum. The Department shall review each request on a case-by-case basis.~~

d) Ranking Criteria

1) Community Need: This criterion is an objective measure ~~of relative poverty and economic distress~~ designed to give some priority to applicants with the highest level of need. Need may be evaluated based on one or more of the following criteria~~The following 2 indicators will be equally weighted and given a numerical score~~:

A) Estimates of average unemployment in Illinois, by county or municipality, if available, based upon Illinois Department of Employment Security data.

B) Percentage of people in poverty according to United States Census Bureau data.

C) Percentage of low/moderate income residents according to the Department of Housing and Urban Development Low/Moderate Income Summary Data.

D) Community's water or sewer rates in comparison to the community's median household income, according to United States Census Bureau data.

2) Urgency of Need

A) An application shall receive a maximum rating if it has fully:

i) documented that a serious deficiency exists in a community's public facility or that the community lacks the facility entirely;

ii) identified problems clearly attributable to the deficiency have occurred, such as serious illness, disease outbreak, or serious environmental pollution; and

iii) identified that the problem is existing, continual and chronic as opposed to occasional, sporadic or probable.

B) An application shall receive a moderate rating if the project only "moderately" addresses the criteria or does not fully meet any one of the criteria in subsection (d)(2)(A).

C) An application shall receive a minimum rating if the project only "minimally" addresses the criteria or does not fully meet any one of the criteria in subsection (d)(2)(A).

D) An application shall receive a "no rating" if it fails to fully meet

the standards in subsection (d)(2)(A).

~~3)~~ ~~Need for Financial Assistance~~

~~A)~~ ~~An application shall receive a maximum rating if it has fully:~~

~~i)~~ ~~documented that all avenues of funding the project with local revenues have been exhausted;~~

~~ii)~~ ~~documented that the proposed project could not reasonably be accomplished without CDAP assistance;~~

~~iii)~~ ~~documented that the proposed level of local financial participation is the maximum that can be reasonably expected;~~

~~iv)~~ ~~documented substantial past efforts to deal with the public facility need with local financial resources, such as tax increases or user fee rate increases; and~~

~~v)~~ ~~demonstrated that reasonable efforts have been made to secure additional funds from other appropriate State and federal agencies.~~

~~B)~~ ~~An application shall receive a moderate rating if the project only "moderately" addresses the criteria or does not fully meet any one of the criteria in subsection (d)(3)(A).~~

~~C)~~ ~~An application shall receive a minimum rating if the project only "minimally" addresses the criteria or does not fully meet any one of the criteria in subsection (d)(3)(A).~~

~~D)~~ ~~An application shall receive a "no rating" if it fails to fully meet the standards in subsection (d)(3)(A).~~

3~~4~~) Benefit to Low- and Moderate-Income Persons

A) A maximum rating shall be received if 71-100% of the persons benefiting are low- to moderate-income.

B) A moderate rating shall be received if 61-70% of persons benefiting are low- to moderate-income.

C) A minimum rating shall be received if 51-60% of persons benefiting are low- to moderate-income.

4~~5~~) Project Readiness. This criterion is a measure of the project's readiness to proceed immediately upon notice of grant award. Ratings of moderate~~Moderate~~, minimum~~Minimum~~, and no rating~~No Rating~~ will be assigned accordingly to projects lacking any or all of the items listed in subsections (d)(5)(A) through (H). In order to receive a maximum rating, applicants must address a majority of the following issues, as applicable to their project:

A) Site Control~~control~~. If land is required for the proposed project (i.e., lagoon or tower site, etc.), the applicant must already own the site and provide evidence of ownership;

B) Leverage Financing~~financing~~. The applicant must demonstrate that all leverage funding for the project has not only been committed but will be available immediately upon grant award, including:

i) United States Department of Agriculture Rural Development Form 1940-1 has been issued to the applicant; and

ii) All issues have been resolved with the Illinois Environmental Protection Agency (i.e., facilities planning, dedicated revenue source, etc.) and the project is ready to bid;

C) Final design engineering of the proposed project has been completed;

D) Illinois Environmental Protection Agency has issued a construction permit;

E) Timely completion of previous CDBG~~CDAP~~ grants~~.~~ (not~~Not~~ applicable if the grantee has not previously received CDBG ~~CDAP~~ funding~~.~~);

F) 100%~~75%~~ or more of necessary easements have been obtained;

G) Executed agreement in place for purchase of water or treatment of wastewater; and

H) Evidence of completion of all previous phases, if the proposed project is part of a multi-phase project.

(Source: Amended at 42 Ill. Reg. 19976, effective October 29, 2018)

Section 110.104 Application Evaluation for Competitive Housing Rehabilitation Component

a) Explanation of Application Ranking System

1) Applicants will compete in a formalized ranking system. Applications will undergo an initial review to determine eligibility in 2 areas: Benefit to Low- and Moderate-Income Persons and Leverage Funds. Upon meeting the minimum eligibility thresholds, applications will compete in a formalized ranking system.

2) Applications will be ranked in 4 areas: Project Need, Project Impact, Evidence of Coordination of Resources, and Project Readiness. The Department will then select projects for funding out of the top-ranking projects as determined under subsection (b)(2) until all available funds are expended.

b) Criteria for Selection of Projects

1) The analysis will evaluate project need, according to its impact on program benefit and benefit to low- to moderate-income persons utilizing the ranking system contained in subsection (d).

2) Comparative Assessment of Applications

A) The Department will screen and identify top ranking CDBG ~~CDAP~~ applications. Projects will be ranked in categories of maximum, moderate, minimum or no rating as described in subsection (d). Maximum ratings do not guarantee that a project will receive funding. The Department will then conduct intensive evaluations, leading to the CDBG~~CDAP~~ grant award decisions. Department staff may conduct field visits and will analyze project characteristics, including:

i) A comparative assessment of projects – e.g., project impact, local contribution, community need, etc.;

ii) A verification of submitted application information;

iii) A thorough analysis of the project's readiness to proceed; and

iv) A determination of the applicant's previous efforts to address its problems.

B) Actual funding levels will relate closely to the competitiveness of the proposed projects. Applications will be comparatively ranked according to the criteria described in this subsection (b) to determine the final funding levels. The Department reserves the right to negotiate the final funding figures.

c) Eligibility Thresholds

1) Benefit to Low- and Moderate-Income Persons: Applications must document that the project will benefit 100% low- to moderate-income persons. Applications which do not document benefit to low- to moderate-income persons will not be considered further.

2) Leverage Funds: Applications must provide evidence that at least 20% of non-administrative housing rehabilitation costs will be provided from non-CDBG~~CDAP~~ sources, except accessibility projects, which will not be required to provide leverage.

d) Ranking Criteria

1) Project Need

A) An application shall receive a maximum rating if it has fully:

i) Demonstrated that the extent of housing deficiencies is widespread and serious and the percentage of substandard units occupied by low- to moderate-income persons is high relative to the total number of households in the area;

ii) Identified specific local conditions that have contributed or are contributing to the deterioration or lack of affordable housing;

iii) Described previous efforts to address housing problems that have not resolved the housing deficiencies, including a description of why the efforts failed to solve the problem.

B) An application shall receive a moderate rating if the project only "moderately" addresses the criteria or does not fully meet any one of the criteria in subsection (d)(1)(A).

C) An application shall receive a minimum rating if the project only "minimally" addresses the criteria or does not fully meet any one of the criteria in subsection (d)(1)(A).

D) An application shall receive a "no rating" if it fails to fully meet the standards in subsection (d)(1)(A).

2) Project Impact

A) An application shall receive a maximum rating if it has fully:

i) Demonstrated that a substantial number of the housing units in need of rehabilitation in the identified project area will be repaired;

ii) Demonstrated that the proposed housing rehabilitation project addresses the identified needs and deficiencies and

moves to resolve the problems; and

iii) Outlined how the targeted need or area is clearly distinguished from the overall housing needs in the community.

B) An application shall receive a moderate rating if the project only "moderately" addresses the criteria or does not fully meet any one of the criteria in subsection (d)(2)(A).

C) An application shall receive a minimum rating if the project only "minimally" addresses the criteria or does not fully meet any one of the criteria in subsection (d)(2)(A).

D) An application shall receive a "no rating" if it fails to fully meet the standards in subsection (d)(2)(A).

3) Evidence of Coordination of Resources

A) An application shall receive a maximum rating if it has fully:

i) Explained the use of all available resources including a description of local efforts to revitalize the area to achieve maximum impact upon the targeted need or area;

ii) Described the extent to which the proposed project represents the most effective option for achieving maximum impact; and

iii) Provided evidence that the applicant has coordinated activities with a local social service provider regarding the identification of eligible households and housing units in need of rehabilitation to meet accessibility standards.

B) An application shall receive a moderate rating if the project only "moderately" addresses the criteria or does not fully meet any one of the criteria in subsection (d)(3)(A).

C) An application shall receive a minimum rating if the project only

"minimally" addresses the criteria or does not fully meet any one of the criteria in subsection (d)(3)(A).

D) An application shall receive a "no rating" if it fails to fully meet the standards in subsection (d)(3)(A).

4) Project Readiness

A) An application shall receive a maximum rating if it has fully:

i) Developed a preliminary list of qualified general contractors which have expressed an interest in, and are available to perform, the proposed rehabilitation activities;

ii) Demonstrated substantial homeowner interest in both loan and/or grant portions of the identified project;

iii) Documented that operational procedures and administrative structure have been established at the local level;

iv) Documented that qualifications of, and procedures for selection of, housing inspectors have been established;

v) Identified the specific types of, and priorities given to, work to be performed, including cost estimates;

vi) Established clear and measurable rehabilitation standards and proposed a reasonable implementation schedule;

vii) Included a description of the local application process that identified how the targeted population will be notified and encouraged to apply; and

viii) Developed preliminary financing plans, such as a commitment of leverage funds and a financing structure that considers residents' incomes.

B) An application shall receive a moderate rating if the project only "moderately" addresses the criteria or does not fully meet any one

of the criteria in subsection (d)(4)(A).

C) An application shall receive a minimum rating if the project only "minimally" addresses the criteria or does not fully meet any one of the criteria in subsection (d)(4)(A).

D) An application shall receive a "no rating" if it fails to fully meet the standards in subsection (d)(4)(A).

(Source: Amended at 42 Ill. Reg. 19976, effective October 29, 2018)

Section 110.106 Demonstration Program: ~~Set-Aside for~~ Emergency Lead-Based Paint Abatement

In order to respond to lead-based paint poisoning problems, ~~for FY 2000 only, $50,000 in~~ funds will be made available on an "as needed" basis. There is no application deadline ~~for this set-aside~~. Awards will be made to communities that are faced with an immediate threat to health and safety to children 6 and under exposed to lead-based paint. If no situations arise that~~which~~ warrant this type of assistance, the set-aside funds will be reallocated at the end of the program year ~~to the competitive public facilities component~~.

a) Project Eligibility Criteria – For a project to be eligible for funding under this component, applicants must document the following:

1) 100 percent of those benefiting from the project will be low-to-moderate income persons (as defined in Section 110.30 ~~of the Part~~);

2) 100 percent of project costs may be paid from CDBG~~CDAP~~ funds unless the project involves rental property owned by a non-low-to-moderate income person. If the rental property is occupied by a low-to-moderate income family, but is owned by a non-low-to-moderate income person, then the rental property owner must contribute at least 50 percent of the costs of the actual lead-based paint abatement;

3) One or more income eligible families living in the community have children 6 or under who have lead poisoning or are in imminent danger of lead poisoning;

4) The project is ready to proceed and expend funds; and

5) A community action agency determined by the Department to have the capacity to undertake lead-based paint abatement will be used to manage the project.

b) Application Review and Approval

1) Applicants for this program must be referred to the Department by DPH based on a finding by DPH or the local health department, if applicable, that children age 6 or under who live within the jurisdiction of the applicant have been diagnosed as having lead poisoning or are in imminent of lead poisoning.

2) Funds will be made available on an as needed basis through a non-competitive process until all funds are obligated.

3) Applications shall be prepared and submitted to the Department as specified in Section 110.70~~ of this Part~~.

(Source: Amended at 42 Ill. Reg. 19976, effective October 29, 2018)

Section 110.110 Administrative Requirements

The administrative requirements detailed in this Section, as well as those enumerated in 47 Ill. Adm. Code 1, are applicable to any grant awarded with respect to this Part.

a) Compensation: The method of compensation shall be in accordance with the applicable State laws relative to that~~such~~ compensation by which the Department is governed. Payments to the grantee are subject to the receipt of electronic requests for fund transfers or expenditure summaries. The first payment for program initiation may be an advance and should be the amount necessary to meet the first month's non-administrative cost needs. Thereafter, the payments are dual purpose in that they will be sufficient to cover the non-administrative expenditures to date, as well as the cash needs of the grantee for the next 30 days. Administrative costs may be drawn in the same manner~~ as described above~~, or the grantee may draw down administrative needs in equal, quarterly increments. Each request shall be certified to the effect that the grantee has performed in conformance with the Grant Agreement and that it is entitled to receive the amount requisitioned.

b) Reporting: An electronic reporting system or an Expenditure Summary and Payment Request form shall be submitted to the Department to request cash.

c) Procurement: Units of General Local Government (UGLG) may use their own procurement procedures, which reflect applicable State and local laws and regulations, provided that the procurement conforms to federal procurement regulations (2 CFR 200). In addition, Illinois statutes must also be considered when establishing procurement procedures. Statutes that may apply can be found at:

http://www.ilga.gov/legislation/ilcs/ilcs.asp in:
Chapter 50 – Local Government
Chapter 55 – Counties
Chapter 60 – Townships
Chapter 65 – Municipalities

Units of General Local Government should follow the stricter regulation, whether federal, State or local government, and consult the Illinois Community Development Block Grant (CDBG) Grants Management Handbook for specific steps and requirements in the process.

~~c) Procurement: Procurement shall be conducted in accordance with 24 CFR 85 (Administrative Requirements for Grants and Cooperative Agreements to State, Local and Federally Recognized Indian Tribal Governments) (2004).~~

d) Records: CDBG~~CDAP~~ records shall be maintained in accordance with 24 CFR 85, ~~of~~ the Illinois Local Records Act [50 ILCS 205], and 24 CFR 570.490 (2004) and are subject to the Freedom of Information Act [5 ILCS 140].

e) Financial Management~~:~~

1) Grantees shall comply with financial management procedures provided in OMB Circular A-87, "Cost Principles for State and Local Governments", published May 4, 1995, and standards promulgated by the American Institute of Certified Public Accountants (AICPA), Harborside Financial Center, 201 Plaza 3, Jersey City NJ 07311, June 2003, no later editions are incorporated.

2) Audits shall be conducted in accordance with the Comptroller General's Standards for Audits of Governmental Organizations, Programs, Activities, or Functions, and the General Accounting Office's Guidelines for Financial and Compliance Audits of Federally Assisted Programs available from U.S. Comptroller General Standards, U.S. General Accounting Office, 441 G Street NW, Washington~~,~~ DC 20548.

f) Bonding and Insurance:

1) Bonding:

A) Grantees: Grantees shall obtain a fidelity bond for each employee or official with access to project assets, accounting records, or checks. The bond (position or blanket) shall be in an amount at least to cover all CDBG~~CDAP~~ funds contained in all bank accounts. The person with signature authority for the CDBG~~CDAP~~ accounts must be bonded for this amount and his or her signature must appear on every check. The total bonding for each employee cannot be counted as a cumulative total. The cost of the fidelity bonds is a CDBG~~CDAP~~ eligible administrative expense.

B) Grant Administrators: If the grant administrator processes payments on behalf of the grantee, the grant administrator shall obtain a fidelity bond for each employee with access to project assets, accounting records, or checks. The bond (position or blanket) shall be in the minimum amount of $750,000. At least one of the persons with signature authority for the CDBG ~~CDAP~~ accounts must be bonded for this amount and his or her signature must appear on every check. The cost of the fidelity bonds is a CDBG~~CDAP~~ eligible administrative expense.

2) Flood Insurance: Grantees shall comply with the flood insurance purchase requirements of section~~Section~~ 102(e) of the Flood Disaster Protection Act of 1973 (42 USC 4001).

g) Expenditure of Project Funds: No project costs may be incurred prior to authorization, and release of funds will not occur without a fully executed grant agreement. Costs may be incurred as follows:

1) CDBG~~CDAP~~ administrative costs may be incurred as of the date of the grant award letter;

2) Non-CDBG~~Non-CDAP~~ project costs (leverage funds) and CDBG-funded~~CDAP-funded~~ design engineering costs may be incurred only after receiving a grant award letter and meeting environmental review requirements; and

3) CDBG-funded~~CDAP-funded~~ projects costs may be incurred only after meeting environmental review requirements ~~all of the above conditions have been satisfied~~ and all specific grant conditions have been met.

h) Grant Agreement: When a grant has been awarded, the grantee~~Grantee~~ and the Department shall enter into a Grant Agreement~~grant agreement~~. The Grant Agreement~~grant agreement~~ shall be executed between the grantee~~Grantee~~ and the Director of the Department or the Director's designee on behalf of the Department. The Grant Agreement~~grant agreement~~ shall contain substantive provisions, including, but not limited to the following:

1) A recitation of legal authority pursuant to which the Grant Agreement~~grant agreement~~ is made;

2) An identification of the scope of work that identified the work or services to be performed or conducted by the grantee~~Grantee~~;

3) An identification of the grant amount/funds;

4) The conditions and manner in which the Department shall disburse the grant funds subject, at all times, to annual funding from the federal government;

5) The grantee's~~Grantee's~~ irrevocable promise to satisfy the leverage requirement, if required;

6) The grantee~~Grantee~~ agrees not to assign or transfer any of its rights, duties~~,~~ or obligations without the written consent of the Department;

7) The grantee's~~Grantee's~~ promise not to amend the scope of work or the

budget without the Department's written consent. Failure to do so would result in a cost disallowance. The scope of work must be completed by the end date stated in the grant agreement unless a written request for an extension of time is submitted, at least, 30 days before the end date;

8) The grantee~~Grantee~~ agrees that it shall expend the grant funds and any accrued interest, if allowed to retain accrued interest, only for the purposes specified in the scope of work; and

9) The grantee~~Grantee~~ agrees that it shall refrain from entering into any written or oral agreement or understanding with any party that might be construed as an obligation of the State of Illinois or the Department for the payment of any funds.

(Source: Amended at 42 Ill. Reg. 19976, effective October 29, 2018)

DEPARTMENT OF FINANCIAL AND PROFESSIONAL REGULATION

NOTICE OF ADOPTED AMENDMENTS

1) Heading of the Part: Pharmacy Practice Act

2) Code Citation: 68 Ill. Adm. Code 1330

3)

Section Numbers:	Adopted Actions:
1330.510	Amendment
1330.640	Amendment
1330.660	Amendment
1330.670	Repealed
1330.680	Amendment

4) Statutory Authority: Implementing the Pharmacy Practice Act [225 ILCS 85] and authorized by Section 2105-15 of the Civil Administrative Code of Illinois [20 ILCS 2105/2105-15].

5) Effective Date of Rules: November 9, 2018

6) Does this rulemaking contain an automatic repeal date? No

7) Does this rulemaking contain incorporations by reference? Yes, in Section 1330.640, the adopted rulemaking inserted the following language, "All pharmaceutical compounding standards, both sterile and nonsterile, shall be governed by the USP-NF (USP 41-NF 36), as set forth in the United States Pharmacopoeia (USP), 41st Revision and the National Formulary, 36th Edition, Compounding Compendium, with the exception of USP Chapter <800> as it pertains to the handling of hazardous drugs in health care settings. Beginning May 1, 2019, all pharmaceutical compounding standards, both sterile and nonsterile, shall be governed by the USP-NF (USP 42-NF 37), as set forth in the 2019 edition of the USP Compounding Compendium, with the exception of USP Chapter <800> as it pertains to the handling of hazardous drugs in health care settings.".

8) A copy of the adopted rules, including any material incorporated by reference, is on file in the principal office of the Division of Professional Regulation and is available for public inspection.

9) Notice of Proposal published in the *Illinois Register*: 41 Ill. Reg. 15130; December 26, 2017

10) Has JCAR issued a Statement of Objection to this rulemaking? No

DEPARTMENT OF FINANCIAL AND PROFESSIONAL REGULATION

NOTICE OF ADOPTED AMENDMENTS

11) Differences between Proposal and Final Version: Section 1330.640(d)(3) of the proposed rule stated that, "The quantity of compounded drug for any practitioner, and all practitioners as a whole, is not greater than an amount the pharmacy is capable of compounding in compliance with pharmaceutical standards for identity, strength, quality and purity of the compounded drug that are consistent with United States Pharmacopoeia guidelines.". Commenters pointed out that the USP Chapters below 100 are enforceable standards and not "guidelines". The Department agreed to replace the term "guidelines" in that paragraph with "standards".

Section 1330.640(d)(4) – removed the restriction that prohibited a practitioner from dispensing nonsterile compounded drugs delivered by a pharmacy for office use.

Section 1330.640(d)(7) of the proposed rule stated that the "Sale of compounded drugs for office use may not exceed 5% of the annual dollar purchases of prescription drugs by the Pharmacy as provided in 68 Ill. Adm. Code 1510.10" which is the current regulation under the Wholesale Drug Distribution Licensing Act [225 ILC 120]. The Department agreed to remove this provision referencing the Wholesale Drug Distribution rule.

Section 1330.640(e)(3) – The proposed rule stated requirements for sterile compounding in designated compounding areas but there was no wording requiring a designated area of the pharmacy for non-sterile compounding. The Department agreed to add the requirement that non-sterile compounding be done in a designated compounding area.

Section 1330.640(f)(3)(c) – The Section originally required both Patient Profile and Medication Record System for recordkeeping purposes; however, it was pointed out in the public comments that these are interchangeable and only one of those are required in Section 1330.640(f)(3)(A). The Department therefore changed the language in Section 1330.640(f)(3)(c) requiring one of the two: either the Patient Profile or the Medication Record System.

Section 1330.640(f)(4) - The Department agreed to add labeling requirements for non-sterile compounded drugs and also added environmental control requirements for the delivery of non-sterile compounded drugs in this adopted version of the rule.

Section 1330.640(g) - The Department removed the limitation placed on a veterinarian of dispensing more than a 7-day supply of a veterinary compounded drug product compounded by a pharmacy for office use. Accordingly, the Department also changed Section 1330.640(g) to allow a pharmacy to compound a reasonable quantity of sterile and nonsterile drug products for office use by a veterinarian.

DEPARTMENT OF FINANCIAL AND PROFESSIONAL REGULATION

NOTICE OF ADOPTED AMENDMENTS

There were also several terms within the proposed rule that were changed per suggestions from public comments (one example would be changing the term, "beyond-use date" in the proposed rule to "expiration").

12) Have all changes agreed upon by the Agency and JCAR been made as indicated in the agreements issued by JCAR? Yes

13) Will this rulemaking replace any emergency rules currently in effect? No

14) Are there any rulemakings pending on this Part? No

15) Summary and Purpose of Rulemaking: This adopted rulemaking was a complete rewriting of the pharmacy regulations for sterile and non-sterile compounding. The biggest change moved the standards for pharmacy compounding from those specifically set forth in rule to the standards developed by the United States Pharmacopeial-National Formulary (USP-NF). The USP-NF compounding standards are the national standard that is currently adopted by more than 35 states. Other changes included allowing pharmacies to sell limited quantities of non-sterile compounded products to practitioners for office use; and permits sterile compounding of veterinary products for office use and limited veterinary dispensing from office use stock. Additional changes included minor technical corrections to existing telepharmacy regulations, plus expansion of the types of healthcare providers permitted to stock or restock an automated dispensing system under the control of a pharmacy but located in a facility, removing barriers for rural facilities that might otherwise face delay in stocking/restocking waiting for a pharmacist or pharmacy technician to arrive.

16) Information and questions regarding these adopted rules shall be directed to:

Department of Financial and Professional Regulation
Attention: Craig Cellini
320 West Washington, 3rd Floor
Springfield IL 62786

217/785-0813
fax: 217/557-4451

The full text of the Adopted Amendments begins on the next page:

DEPARTMENT OF FINANCIAL AND PROFESSIONAL REGULATION

NOTICE OF ADOPTED AMENDMENTS

TITLE 68: PROFESSIONS AND OCCUPATIONS
CHAPTER VII: DEPARTMENT OF FINANCIAL AND PROFESSIONAL REGULATION
SUBCHAPTER b: PROFESSIONS AND OCCUPATIONS

PART 1330
PHARMACY PRACTICE ACT

SUBPART A: GENERAL PROVISIONS

Section
1330.10 Definitions
1330.20 Fees
1330.30 Unprofessional and Unethical Conduct
1330.40 Violations
1330.50 Vaccinations/Immunizations
1330.60 Internet Pharmacies
1330.70 Granting Variances
1330.80 Renewals
1330.90 Restoration of a Pharmacist License
1330.100 Continuing Education
1330.110 Confidentiality

SUBPART B: PHARMACY TECHNICIAN

Section
1330.200 Application for Certificate of Registration as a Pharmacy Technician
1330.210 Pharmacy Technician Training
1330.220 Application for Certificate of Registration as a Certified Pharmacy Technician

SUBPART C: PHARMACIST

Section
1330.300 Approval of Pharmacy Programs
1330.310 Graduates of Programs Outside the United States
1330.320 Application for Examination
1330.330 Examination for Licensure
1330.340 Application for Licensure on the Basis of Examination
1330.350 Endorsement

DEPARTMENT OF FINANCIAL AND PROFESSIONAL REGULATION

NOTICE OF ADOPTED AMENDMENTS

SUBPART D: PHARMACY LICENSURE

Section
1330.400 Application for a Pharmacy License
1330.410 Pharmacy Licenses
1330.420 Emergency Remote Temporary Pharmacy License

SUBPART E: TYPES OF PHARMACIES

Section
1330.500 Community Pharmacy Services
1330.510 Telepharmacy
1330.520 Offsite Institutional Pharmacy Services
1330.530 Onsite Institutional Pharmacy Services
1330.540 Nuclear Pharmacy Services
1330.550 Nonresident Pharmacies
1330.560 Remote Prescription/Medication Order Processing

SUBPART F: PHARMACY STANDARDS

Section
1330.600 Security Requirements
1330.610 Pharmacy Structural/Equipment Standards
1330.620 Electronic Equipment Requirements for Remote Pharmacies
1330.630 Sanitary Standards
1330.640 Pharmaceutical Compounding Standards
1330.650 Pharmacy Computer Regulations
1330.660 Pharmacist-in-Charge
1330.670 Compounded Sterile Preparation Standards (Repealed)
1330.680 Automated Dispensing and Storage Systems

SUBPART G: PHARMACY OPERATIONS

Section
1330.700 Patient Counseling
1330.710 Reporting Theft or Loss of Controlled Substances
1330.720 Transfer of Prescription
1330.730 Drug Prepackaging
1330.740 Multi-Med Dispensing Standards for Community Pharmacies
1330.750 Return of Drugs

DEPARTMENT OF FINANCIAL AND PROFESSIONAL REGULATION

NOTICE OF ADOPTED AMENDMENTS

1330.760 Electronic Transmission of Prescriptions
1330.770 Centralized Prescription Filling
1330.780 Change of Ownership of a Pharmacy
1330.790 Closing a Pharmacy
1330.800 Pharmacy Self-Inspection

AUTHORITY: Implementing the Pharmacy Practice Act [225 ILCS 85] and authorized by Section 2105-15 of the Civil Administrative Code of Illinois [20 ILCS 2105/2105-15].

SOURCE: Rules and Regulations Promulgated for the Administration of the Illinois Pharmacy Practice Act, effective August 20, 1975; amended March 8, 1977; amended at 4 Ill. Reg. 1234, effective July 11, 1980; amended at 5 Ill. Reg. 2997, effective March 11, 1981; codified at 5 Ill. Reg. 11049; emergency amendment at 6 Ill. Reg. 916, effective January 6, 1982, for a maximum of 150 days; amended at 6 Ill. Reg. 7448, effective June 15, 1982; amended at 7 Ill. Reg. 6496, effective June 30, 1983; amended at 9 Ill. Reg. 16918, effective October 23, 1985; amended at 10 Ill. Reg. 21913, effective December 17, 1986; transferred from Chapter I, 68 Ill. Adm. Code 330 (Department of Registration and Education) to Chapter VII, 68 Ill. Adm. Code 1330 (Department of Professional Regulation) pursuant to P.A. 85-225, effective January 1, 1988, at 12 Ill. Reg. 2957; amended at 12 Ill. Reg. 17394, effective October 14, 1988; amended at 16 Ill. Reg. 19811, effective December 7, 1992; amended at 21 Ill. Reg. 12600, effective August 29, 1997; amended at 22 Ill. Reg. 21959, effective December 1, 1998; amended at 23 Ill. Reg. 14131, effective November 18, 1999; amended at 24 Ill. Reg. 8548, effective June 9, 2000; amended at 26 Ill. Reg. 18338, effective December 13, 2002; amended at 27 Ill. Reg. 19389, effective December 11, 2003; emergency amendment at 29 Ill. Reg. 5586, effective April 1, 2005, for a maximum of 150 days; amended at 29 Ill. Reg. 13639, effective August 25, 2005; amended at 30 Ill. Reg. 14267, effective August 21, 2006; amended at 30 Ill. Reg. 16930, effective October 12, 2006; emergency amendment at 31 Ill. Reg. 16045, effective November 19, 2007, for a maximum of 150 days; amended at 32 Ill. Reg. 3262, effective February 21, 2008; amended at 32 Ill. Reg. 7116, effective April 16, 2008; old Part repealed at 34 Ill. Reg. 6688, effective April 29, 2010; new Part adopted at 34 Ill. Reg. 6690, effective April 29, 2010; amended at 39 Ill. Reg. 6267, effective April 23, 2015; amended at 41 Ill. Reg. 10643, effective August 18, 2017; amended at 42 Ill. Reg. 20022, effective November 9, 2018.

SUBPART E: TYPES OF PHARMACIES

Section 1330.510 Telepharmacy

a) Telepharmacy shall be limited to the types of operations described in this Section. Each site where such operations occur shall be a separately licensed pharmacy.

Home pharmacies that are located outside of Illinois must be licensed as a nonresident pharmacy. Nonresident pharmacies shall abide by all Illinois laws and rules when filling prescriptions for Illinois residents, except that the dispensing pharmacist and the pharmacist-in-charge shall not be required to be licensed in Illinois, except as otherwise provided in this Part.

b) Remote Dispensing Site

1) Written prescriptions presented to the remote dispensing site shall be scanned into the electronic data processing equipment to ensure initial dispensing and each refill and the original prescription may be viewed on the monitor at both the remote dispensing site and home pharmacy site. Unless otherwise provided by federal law, all~~All~~ written prescriptions shall be delivered to the home pharmacy for filing within 72 hours. Records shall be maintained at the home pharmacy in files separate from the home pharmacy files.

2) A remote site is considered to be under the supervision of the pharmacist-in-charge of the home pharmacy.

3) The remote site shall use its home pharmacy and pharmacy management system.

A) The system shall assign consecutive prescription numbers.

B) All records must be maintained at the home pharmacy.

C) Prescriptions dispensed at the remote site shall be distinguishable from those dispensed from the home pharmacy.

D) Daily reports must be separated for the home and remote site.

4) A pharmacist at the home pharmacy must verify each prescription before it leaves the remote site.

A) Pharmacist and pharmacy technician initials or unique identifiers must appear on the prescription record and the prescription label.

B) A pharmacist shall electronically compare via video link the stock bottle, drug dispensed, the strength and its beyond use date. The entire label must be checked for accuracy on the video link.

C) The remote dispensing site shall utilize a barcode system that prints the barcode of the stock bottle on the label of the dispensed drug. If the stock bottle does not have a barcode, the pharmacy shall create one. The technician shall scan both the stock bottle and the label of the dispensed drug to verify that the drug dispensed is the same as the drug in the stock bottle for each prescription dispensed.

D) A pharmacy may utilize a different electronic verification system that accomplishes the same purpose after review and approval of the Division.

5) Counseling must be done by a pharmacist via video link and audio link before the drug or medical device is released. The pharmacist providing counseling, pursuant to this subsection, must be employed or contracted by the home pharmacy or by a pharmacy contracted with the home pharmacy and have access to all relevant patient information maintained~~maintined~~ by the home pharmacy.

6) A pharmacist-in-charge or his or her designated pharmacist must complete monthly inspections of the remote site. Inspection criteria must be included in the policies and procedures for the site. The inspection report must be available on site for pharmacy investigator inspection.

7) Controlled substances shall be kept at the remote site in accordance with the Act and this Part. All records must be stored at the home pharmacy and at the remote site.

8) There shall be a working computer link, video link and audio link to a pharmacist at a home pharmacy whenever the prescription area is open to the public. The communication link must be checked daily and the remote site pharmacy must be closed if the link malfunctions, unless a pharmacist is physically present at the remote site.

A) The pharmacy technician located at the remote dispensing site must have one year of experience and be registered as a certified pharmacy technician, or be a student pharmacist.

B) New prescriptions received at the remote dispensing site may be entered into the remote computer system with all verification, interaction, checking and profile review by the pharmacist at the home pharmacy.

C) Each pharmacist at the home pharmacy may electronically supervise no more than 3 remote sites that are simultaneously open.

9) The facility must have a sign clearly identifying it as a remote dispensing site.

10) Security of filled prescriptions must be maintained by storing them in a separate lock drawer or cabinet.

11) The facility shall have an area for patient consultation, exclusive of any waiting area.

c) Remote Consultation Site

1) These sites have no prescription inventory.

2) Only filled prescriptions, filled at the home pharmacy, with final patient labeling attached are allowed at these sites.

3) These sites must be staffed with a pharmacy technician or certified pharmacy technician who has the knowledge necessary to use computer audio/video link for dispensing and consultation to occur. Pharmacist and pharmacy technician initials or unique identifiers must appear on the prescription record and the prescription label.

4) Written prescriptions may be received at a remote consultation site. All written prescriptions presented at a remote consultation site shall be delivered to the home pharmacy within 72 hours.

5) Security of filled prescriptions must be maintained by storing them in a separate lock drawer or cabinet.

6) Recordkeeping shall be conducted by the pharmacist (time/date) when dispensing and counseling occurred.

7) The facility shall have a room for patient consultation exclusive of any waiting area.

8) The facility must have a sign clearly identifying it as a remote consultation site.

d) Automated Pharmacy Systems (Section 22(b) of the Act)

1) Remote Automated Pharmacy Systems (RAPS)

A) These devices shall maintain a prescription drug inventory that is controlled electronically by the home pharmacy or, when operated by a pharmacy contracted with the home pharmacy, by the contracted pharmacy, which shall be utilized to dispense patient specific prescriptions.

B) These systems shall have prescription inventory, which must be secured in an automated pharmacy system and electronically connected to and controlled by the home pharmacy.

C) A pharmacist must approve all the prescription orders before they are released from the RAPS.

D) Dispensing and counseling are performed by a pharmacist employed or contracted by the home pharmacy via audio and video link.

E) All filled prescription must have a label that meets the requirements of the Act attached to the final drug container.

F) The pharmacist-in-charge of the home pharmacy, or a designated registrant, shall conduct and complete monthly inspections of the RAPS. Inspection criteria must be included in the policies and

procedures for the site. The report must be available to the pharmacy investigators when requested.

G) The RAPS must be licensed with the Division as an automated pharmacy system and will be subject to random inspection by pharmacy investigators. Notwithstanding that the RAPS shall possess a license, the home pharmacy shall remain responsible for inventory control and billing. For purposes of random inspections, a pharmacist with access to the system must be available at the site within one hour, or as otherwise approved by the drug compliance investigator. In the event the Chief Pharmacy Coordinator determines that the RAPS poses a significant risk of patient harm, the RAPS must be disabled until such time as the pharmacist with access to the system is available to the site.

H) Medication dispensed at the automated pharmacy system site may only be packaged by a licensed manufacturer or repackager, or prepackaged by a licensed pharmacy in compliance with this Section. Prepackaging must occur at the home pharmacy, a pharmacy sharing common ownership with the home pharmacy, or a pharmacy that has contracted with the home pharmacy to perform prepackaging services. The following requirements shall apply whenever medications are prepackaged by a pharmacy other than the home pharmacy:

i) The prepackaging pharmacy shall be licensed in Illinois as a resident or nonresident pharmacy.

ii) The prepackaging pharmacy shall share a common database with the home pharmacy, or have in place an electronic or manual process to ensure that both pharmacies have access to records to verify the identity, lot numbers and expiration dates of the prepackaged medications stocked in the RAPS.

iii) The prepackaging pharmacy shall maintain appropriate records to identify the responsible pharmacist who verified the accuracy of the prepackaged medication.

I) Written prescriptions may be received at an RAPS. All written prescriptions presented to an RAPS shall be scanned utilizing imaging technology that permits the reviewing pharmacist to determine its authenticity. The sufficiency of the technology shall be determined by the Department. If sufficient technology is not used, the written prescriptions must be delivered to the home pharmacy and reviewed by a pharmacist prior to being dispensed to the patient.

2) Kiosk

A) A kiosk is a device that maintains individual patient prescription drugs that were verified and labeled at the home pharmacy.

B) A home pharmacy may only use the kiosk with prior approval of a patient.

C) A kiosk located on the same premises or campus of the home pharmacy shall operate under the same license as the home pharmacy. However, a kiosk must be licensed with the Division if it is not so located.

D) A kiosk shall:

i) When located on the same premises or campus as the pharmacy, inform a patient, if he or she is using the device when the pharmacy is open, that the patient may address questions and concerns regarding the prescription to a pharmacist at the pharmacy;

ii) When not located on the same premises or campus as the pharmacy, inform a patient, if he is using the device when the pharmacy is closed, that he or she may immediately direct any questions and concerns regarding the prescription to a licensed pharmacist via a pharmacy provided audio/video link;

iii) Inform a patient that a prescription is not available to be delivered by the device if the pharmacist has determined

that he or she desires to counsel the patient in person regarding the prescription.

3) A pharmacy may use an automated pharmacy system to deliver prescriptions to a patient when the device:

A) Is secured against a wall or floor;

B) Provides a method to identify the patient and delivers the prescription only to that patient or the patient's authorized agent;

C) Has adequate security systems and procedures to prevent unauthorized access, to comply with federal and State regulations, and to maintain patient confidentiality;

D) Records the time and date that the patient removed the prescription from the system.

4) A licensed automated pharmacy system shall not be utilized by prescribers. Nothing in this Section shall prevent a prescriber from utilizing an automated pharmacy system in connection with his or her own dispensing. However, a prescriber may not utilize or access an automated pharmacy system licensed pursuant to this Section.

e) All pharmacists performing services in support of a remote dispensing site, remote consultation site, kiosk, or RAPS must display a copy or electronic image of their licenses at the remote site where they provide services, or shall otherwise make their license visible to the patient, and be licensed in this State, unless employed by a pharmacy licensed in Illinois as a nonresident pharmacy, in which case, the pharmacist providing the services shall hold an active license as a pharmacist in the state in which the nonresident pharmacy is located and only the pharmacist-in-charge of the remote site must be licensed in Illinois.

f) Each remote site must display a sign, easily viewable by the customer, that states:

1) The facility is a telepharmacy supervised by a pharmacist located at (address); and

2) The pharmacist is required to talk to you, over an audio/visual link, each time you pick up a prescription.

g) No remote site may be open when the home pharmacy is closed, unless a pharmacist employed or contracted by the home pharmacy, or by a pharmacy contracted with the home pharmacy, is present at the remote site or is remotely providing supervision and consultation as required under this Section.

(Source: Amended at 42 Ill. Reg. 20022, effective November 9, 2018)

SUBPART F: PHARMACY STANDARDS

Section 1330.640 Pharmaceutical Compounding Standards

All pharmaceutical compounding standards, both sterile and nonsterile, shall be governed by the USP-NF (USP 41-NF 36), as set forth in the United States Pharmacopoeia (USP), 41st Revision and the National Formulary, 36th Edition, Compounding Compendium, with the exception of USP Chapter <800> as it pertains to the handling of hazardous drugs in health care settings. Beginning May 1, 2019, all pharmaceutical compounding standards, both sterile and nonsterile, shall be governed by the USP-NF (USP 42-NF 37), as set forth in the 2019 edition of the USP Compounding Compendium, with the exception of USP Chapter <800> as it pertains to the handling of hazardous drugs in health care settings.~~The minimum standards and technical equipment considered adequate for compounding drugs shall include:~~

a) A pharmacy may only dispense compounded drugs pursuant to a valid patient-specific prescription, except as provided in this Section~~A storage area separate for materials used in compounding~~.

b) "Office use" means the administration of a non-patient specific compounded drug to a patient by a practitioner in the practitioner's office or by the practitioner in a health care facility or treatment setting. "Office use" does not include a pharmacy's delivery of a compounded drug to a prescribing practitioner's office pursuant to a valid patient-specific prescription~~Scales and balances for the compounding done in the pharmacy~~.

c) Sterile compounding for office use is prohibited unless the pharmacy is in full compliance with 21 USC 353b, including becoming registered as an outsourcing facility and licensed as a wholesale drug distributor pursuant to the Wholesale Drug Distribution Licensing Act [225 ILCS 120]. However, a sterile

compounded drug may be delivered to the prescribing practitioner's office for administration pursuant to a valid patient-specific prescription~~An area of the pharmacy used for compounding activities~~.

d) A pharmacist may dispense and deliver a reasonable quantity of a nonsterile compounded drug to a practitioner for office use by the practitioner in accordance with this Section, provided:~~A heating apparatus.~~

1) The quantity of compounded drug does not exceed the amount a practitioner anticipates may be used in the practitioner's office before the expiration of the beyond use date of the drug;

2) The quantity of compounded drug is reasonable considering the intended use of the compounded drug and the nature of the practitioner's practice;

3) The quantity of compounded drug for any practitioner, and all practitioners as a whole, is not greater than an amount the pharmacy is capable of compounding in compliance with pharmaceutical standards for identity, strength, quality and purity of the compounded drug that are consistent with United States Pharmacopoeia guidelines;

4) The pharmacy maintains readily retrievable records of all compounded drugs ordered by practitioners for office use. The records must be maintained for a minimum of 5 years and shall include:

A) The name, address and phone number of the practitioner ordering the compounded drug for office use and the date of the order;

B) The name, strength, quantity and dosage form of the compounded drug provided, including the number of containers and quantity in each;

C) The date the drug was compounded;

D) The date the compounded drug was provided to the practitioner; and

E) The lot number and beyond-use date.

5) The pharmacy affixes a label to any compounded drug that is provided for office use. The label shall include:

A) The name, address and phone number of the compounding pharmacy;

B) The name, strength and dosage form of the compounded drug and a list of active ingredients and strengths. If the number of active ingredients would prohibit proper labeling, then the pharmacist shall provide to the practitioner a complete list of the active ingredients and strengths (including those on the label);

C) The pharmacy's lot number and beyond-use date;

D) The quantity or amount in the container;

E) The appropriate ancillary instructions, such as storage instructions, cautionary statements, or hazardous drug warning labels when appropriate; and

F) The statement "For Office Use Only – Not for Resale".

e) All pharmacies that compound drugs must maintain, at a minimum, the following standards and equipment:~~A logbook or record keeping system to track each compounded prescription and the components used.~~

1) A separate storage area for materials used in compounding;

2) Scales or measuring devices with sufficient accuracy for the products to be compounded;

3) An area of the pharmacy used exclusively for compounding;

4) A logbook or record keeping system to track each compounded drug, which must include the lot number, expiration date of components used, and beyond-use date of compounded drug. This applies to each nonsterile compounded drug and each sterile compounded drug with a beyond-use date greater than 24 hours;

5) The current edition of the USP Compounding Compendium. This publication may be in electronic format and/or available via the internet;

6) If engaged in veterinary drug compounding, "Plumb's Veterinary Drug Handbook" or any other similar publication approved by the Division;

7) Consumable materials, as appropriate to the pharmacy services provided at that specific pharmacy, including but not limited to: filter paper, powder papers, empty capsules, ointment jars, bottles, vials, safety closures, powder boxes, labels and distilled water;

8) Drug Distribution and Control

A) Patient Profile or Medication Record System. A pharmacy generated patient profile or medication record system shall be maintained, in addition to the prescription file. The patient profile or medication record system shall contain, at a minimum:

i) Patient's name;

ii) Date of birth or age;

iii) Gender;

iv) Compounded sterile drugs dispensed;

v) Date dispensed, if off site;

vi) Date compounded;

vii) Drug content and quantity;

viii) Patient directions, if drug is administered off site;

ix) Other drugs or supplements the patient is receiving, if provided by the patient or his or her agent; and

x) Known drug sensitivities and allergies to drugs and foods.

B) Labeling. Each compounded drug dispensed to patients shall be labeled with the following information, using a permanent label:

i) Name, address and telephone number of the licensed pharmacy, if not used within the facility;

ii) Date dispensed and identifying number, if used off site;

iii) Patient's name and room number, if applicable;

iv) Name of each drug component, strength, amount and dosage form;

v) Directions for use and/or infusion rate, if used off site;

vi) Prescriber's name, if used off site;

vii) Required controlled substances transfer warnings, when applicable;

viii) Beyond-use date, and time if appropriate;

ix) If used offsite, identity of compounding and dispensing pharmacist or other authorized individual; and

x) Auxiliary label with storage requirements, if applicable.

C) In addition to labeling requirements on the Pharmacy Practice Act [225 ILCS 85] and this Part, compounded drugs dispensed to patients shall have on the label or an auxiliary label the following: "This prescription was specifically compounded in our pharmacy for you at the direction of your prescriber."

D) The pharmacist-in-charge shall ensure that records are maintained for 5 years, are readily retrievable and in a format that provides enforcement agents an accurate and comprehensive method of monitoring distribution via an audit trail. The records shall include at least the following information:

i) Purchase records; and

ii) Patient profile or medication;

9) Delivery Service. The pharmacist-in-charge shall ensure the environmental control of all preparations shipped or delivered off site. Therefore, any compounded pharmaceutical must be shipped or delivered to a patient in temperature controlled (as defined by USP Standards) delivery containers; and

10) Sales of compounded drugs to other pharmacies not under common ownership, or to clinics, hospitals or manufacturers, other than as provided in subsection (d), are not allowed, except for sales provided by pharmacies contracted to provide centralized prescription filling services pursuant to Section 25.5 of the Act, including compounding in anticipation of receiving a prescription or order based on routine, readily observed dispensing patterns.

f) For sterile compounding, a pharmacy must comply with the following additional requirements:

1) The following current resource materials and texts shall be maintained in the pharmacy and may be in electronic format:

A) Copies of the Act and this Part, the Illinois Controlled Substances Act [720 ILCS 570] and 77 Ill. Adm. Code 3100, 21 CFR (Food and Drugs), and the Illinois Hypodermic Syringes and Needles Act [720 ILCS 635];

B) One compatibility reference, such as:

i) ASHP's Handbook on Injectable Drugs;

ii) King's Guide to Parenteral Admixtures; or

iii) Any other Division-approved publication; and

C) A file or reference on extended (more than 24 hours) stability data given to finished preparations.

2) Staffing. A pharmacist shall be accessible at all times to enable each licensed facility to respond to patients' and health professionals' questions and needs. A 24-hour telephone number shall be included on the prescription label of compounded drugs and medication infusion devices if used off site.

3) Emergency Medications. Pharmacies that dispense compounded sterile drugs to patients in facilities off site or for administration in the patient's residence shall stock supplies and medications appropriate for treatment of allergic or other common adverse effects, to be dispensed upon the prescription or order of an authorized prescriber.

~~f) A book or reference containing formulas with directions for compounding. The books and references may be in electronic format and/or available via the Internet.~~

g) Notwithstanding any other provision of this Section, a pharmacy may compound a reasonable quantity of sterile and nonsterile drug products for office use by a veterinarian~~The pharmacy operations manual shall contain the policies and procedures pertinent to the level of complexity and the size of the compounding operations of the practice at that specific pharmacy. Electronic versions are acceptable~~.

h) It shall be the ongoing responsibility of the pharmacist-in-charge to ensure that all pharmacists, student pharmacists, registered certified pharmacy technicians, and registered pharmacy technicians who participate in compounding activities are adequately trained for the type of compounding in which they participate. Documentation of this training shall be maintained by the pharmacy at all times~~Consumable materials, as appropriate to the pharmacy services provided at that specific pharmacy, such as filter paper, powder papers, empty capsules, ointment jars, bottles, vials, safety closures, powder boxes, labels and distilled water~~.

i) Any pharmacy that, after initial licensure, chooses to add sterile compounding to the services it provides must be inspected by, and the compounding area must be approved by, the Department. It shall be the responsibility of the pharmacist-in-charge to notify the Department and arrange for the inspection~~The pharmacy may~~

~~compound drug products to be used by practitioners in their office for administration to patients~~.

j) For the purposes of this Section, "off-site" for all pharmacies, other than an onsite institutional pharmacy, means outside the licensed premises of a pharmacy. "Off-site" for an onsite institutional pharmacy means outside the institution within which the pharmacy is located~~Sales of compounded drugs to other pharmacies not under common ownership, or to clinics, hospitals or manufacturers are not allowed, except for sales provided by pharmacies contracted to provide centralized prescription filling services pursuant to Section 25.5 of the Act, including compounding in anticipation of receiving a prescription or order based on routine, readily observed dispensing patterns~~.

(Source: Amended at 42 Ill. Reg. 20022, effective November 9, 2018)

Section 1330.660 Pharmacist-in-Charge

a) No pharmacy shall be granted a license without a pharmacist being designated on the pharmacy license as pharmacist-in-charge.

b) A pharmacy shall have one pharmacist-in-charge who shall be routinely and actively involved in the operation of the pharmacy.

c) A pharmacist may be the pharmacist-in-charge for more than one pharmacy; however, the pharmacist-in-charge must work an average of at least 8 hours per week at each location where he or she is the pharmacist-in-charge. If a pharmacist in charge is on a leave of more than 90 days, a new pharmacist-in-charge must be designated.

d) The responsibilities of the pharmacist-in-charge shall include:

1) Supervision of all activities of all employees as they relate to the practice of pharmacy;

2) Establishment and supervision of the method and manner for storage and safekeeping of pharmaceuticals, including maintenance of security provisions to be used when the pharmacy is closed (see Section 1330.600); and

3) Establishment and supervision of the recordkeeping system for the purchase, sale, delivery, possession, storage and safekeeping of drugs.

e) The operations of the pharmacy and the establishment and maintenance of security provisions are the dual responsibility of the pharmacist-in-charge and the owner of the pharmacy.

f) Within 30 days after a change of a pharmacist-in-charge, the Division shall be notified in writing by the departing pharmacist-in-charge.

g) In addition to notifying the Division within 30 days, the departing pharmacist-in-charge shall, on the effective date of the change, inventory the following controlled substances:

1) All Schedule II drugs, as defined in the Illinois Controlled Substances Act, by actual physical count; and

2) All other scheduled drugs, as defined in the Illinois Controlled Substances Act, by estimated count.

h) The inventory described in subsection (g) shall constitute, for the purpose of this Section, the closing inventory of the departing pharmacist-in-charge and the initial inventory of the incoming pharmacist-in-charge. This inventory record shall be preserved in the pharmacy for a period of 5 years. An affidavit attesting to the completion of the inventory and preservation of the inventory record, bearing the date of the inventory and the name and signatures of the departing and the incoming pharmacist-in-charge, shall be submitted to the Division at its principal office within 30 days after the change in the pharmacist-in-charge.

i) In the event the departing pharmacist-in-charge refuses to complete the inventory as provided for in subsection (g), or that pharmacist-in-charge is incapacitated or deceased, the initial inventory for the incoming pharmacist-in-charge shall be the inventory as completed by the incoming pharmacist-in-charge. The incoming pharmacist-in-charge will not be responsible for any discrepancy that may exist in the inventory prior to his or her initial inventory.

j) When the accuracy, relevance or completeness of any submitted documentation is questioned by the Division, because of a lack of information, discrepancies or

conflicts in information given, or a need for clarification, the registrant will be required to:

1) Provide information as may be necessary; and/or

2) Appear for an interview before the Board to explain the relevance or sufficiency, clarify information given, or clear up any discrepancies or conflict of information.

k) Records shall be retained as provided for in Section 18 of the Act. Invoices for all legend drugs shall be maintained for a period of 5 years either on site or at a central location where records are readily retrievable. Invoices shall be maintained on site for at least one year from the date of the invoice.

l) Whenever a pharmacy intends on changing or adding to the type of pharmacy services it offers, as listed in Sections 1330.500, 1330.510, 1330.520, 1330.530, 1330.540, ~~and~~ 1330.560 and 1330.640, it shall notify the Division no less than 30 days prior to the change or addition.

(Source: Amended at 42 Ill. Reg. 20022, effective November 9, 2018)

Section 1330.670 Compounded Sterile Preparation Standards (Repealed)

~~a) This Section sets forth standards for pharmacies whose practice includes the preparation, labeling and distribution of compounded sterile preparations pursuant to prescriptions or medication orders, as defined in the Act. These activities may include, but are not limited to:~~

~~1) Sterile preparation of parenteral therapy and parenteral nutrition;~~

~~2) Sterile preparations of cytotoxic or antineoplastic agents; and~~

~~3) Other sterile preparations to be used topically or internally by humans or animals.~~

~~b) Definitions~~

~~1) "Barrier Isolation Chamber" means an apparatus designed to provide a Class 5, 6 or 7 environment, as spelled out in ISO (International~~

~~Organization for Standardization) 14644-1, for preparation of sterile preparations using solid walls rather than air movement (laminar air flow) to create a critical zone for preparation handling, a high efficiency particulate air (HEPA) filtration system that conditions the air flowing through the unit to remove initial particles and particles generated within the controlled environment, and a means by which preparations are introduced and people interact with the preparation being prepared within the unit.~~

~~2)~~ ~~"Biological Safety Cabinet" or "BSC" means a containment unit suitable for the preparation of low to moderate risk agents when there is a need for protection of the preparation, personnel and environment, according to ISO 14644-1.~~

~~3)~~ ~~"Compounded Sterile Preparation" or "CSP" means a sterile pharmaceutical that has been prepared by a pharmacist, or under the supervision of a pharmacist. It shall be a preparation prepared for or in anticipation of a specific patient prescription or medication order issued by a prescribing practitioner. The preparation may include commercially available dosage forms that may need to be altered by the pharmacist to meet a specific patient's need.~~

~~4)~~ ~~"Cytotoxic" means a pharmaceutical that has the capability of killing living cells. These agents shall include, but are not limited to, agents classified as cancer chemotherapeutic, carcinogenic, mutagenic and antineoplastic.~~

~~5)~~ ~~"Laminar Airflow Hood" means an apparatus designed to provide a Class 5, 6 or 7 environment, as spelled out in ISO 14644-1 for preparation of sterile products using air circulation in a defined direction that passes through a HEPA filter to remove the initial particles and particles generated within the controlled environment.~~

~~6)~~ ~~"Parenteral" means sterile preparations of drugs for injection through one or more layers of the skin.~~

~~7)~~ ~~"Terminal" means a patient whose medical condition indicates his or her life expectancy to be 6 months or less.~~

~~c) Physical Requirements of Pharmacies Preparing Compounded Sterile Preparations~~

~~1) The pharmacy shall have a designated area for preparing compounded sterile preparations. The area shall be designed to minimize outside traffic and airflow disturbances from activity within the facility. It shall be of sufficient size to accommodate a laminar airflow hood (LAF), barrier isolation chamber or BSC and to provide for the proper storage of drugs and supplies under appropriate conditions of temperature, light, moisture, sanitation, ventilation and security. It shall be ventilated in a manner so as not to interfere with the equipment specified in this subsection (c)(1).~~

~~2) The licensed pharmacy preparing compounded sterile preparations shall have the following:~~

~~A) LAF workstation~~

~~i) LAF shall be certified annually in accordance with ISO 14644-1;~~

~~ii) In the event the preparation apparatus is moved from its site of certification, recertification shall occur prior to resumption of use for compounding sterile preparations;~~

~~iii) Prefilters shall be inspected, replaced or cleaned per manufacturer specifications monthly and documentation of this maintained;~~

~~B) Sink with hot and cold running water, which is convenient to, but apart from, the compounding area;~~

~~C) National Institute for Occupational Safety and Health (NIOSH) approved disposal containers for used needles, syringes, etc., and, if applicable, cytotoxic waste from the preparation of chemotherapy agents;~~

~~D) Biohazard cabinetry for environment control when cytotoxic compounded sterile preparations are prepared;~~

~~E) Refrigerator and/or freezer with a thermometer or temperature recording device; and~~

~~F) Temperature controlled containers for off site deliveries.~~

~~3) The following current resource materials and texts shall be maintained in the pharmacy:~~

~~A) American Hospital Formulary Service;~~

~~B) Copies of the Act and this Part, the Illinois Controlled Substances Act and 77 Ill. Adm. Code 3100, 21 CFR and the Illinois Hypodermic Syringes and Needles Act [720 ILCS 635];~~

~~C) One compatibility reference such as:~~

~~i) Trissel's Handbook on Injectable Drugs;~~

~~ii) King's Guide to Parenteral Admixtures; or~~

~~iii) Any other Division approved publication;~~

~~D) A file or reference on extended (more than 24 hours) stability data given to finished preparations.~~

~~d) Staffing. A pharmacist shall be accessible at all times at each licensed facility to respond to patients' and health professionals' questions and needs. A 24-hour telephone number will be included on all labeling of compounded medication and medication infusion devices if used off site.~~

~~e) Drug Distribution and Control~~

~~1) Patient Profile or Medication Record System. A pharmacy generated patient profile or medication record system shall be maintained in addition to the prescription file. The patient profile or medication record system shall contain, at a minimum:~~

~~A) Patient's full name;~~

~~B) Date of birth or age;~~

~~C) Gender;~~

~~D) Compounded sterile preparations dispensed;~~

~~E) Date dispensed, if off site;~~

~~F) Drug content and quantity;~~

~~G) Patient directions, if preparation being administered off site;~~

~~H) Identifying number;~~

~~I) Identification of dispensing pharmacist and, if applicable, pharmacy technician;~~

~~J) Other drugs or supplements the patient is receiving, if provided by the patient or his or her agent;~~

~~K) Known drug sensitivities and allergies to drugs and foods;~~

~~L) Diagnosis; and~~

~~M) Lot numbers of components or individual medicine if the compounded sterile preparation is not used within 48 hours after preparation.~~

~~2) Labeling. Each compounded sterile preparation dispensed to patients shall be labeled with the following information, using a permanent label:~~

~~A) Name, address and telephone number of the licensed pharmacy, if not used within facility;~~

~~B) Administration date and identifying number if used on site, date dispensed, and identifying number if used off site;~~

~~C) Patient's full name and room number, if applicable;~~

~~D) Name of each drug, strength and amount;~~

~~E) Directions for use and/or infusion rate if used off site;~~

~~F) Prescriber's full name if used off site;~~

~~G) Required controlled substances transfer warnings, when applicable;~~

~~H) Beyond use date and time;~~

~~I) Identity of pharmacist compounding and dispensing, or other authorized individual; and~~

~~J) Auxiliary labels storage requirements, if applicable.~~

~~3) The pharmacist-in-charge shall ensure that records are maintained for 5 years and are readily retrievable and in a format that provides enforcement agents an accurate and comprehensive method of monitoring distribution via an audit trail. The records shall include at least the following information:~~

~~A) Patient profile;~~

~~B) Medication record system;~~

~~C) Purchase records; and~~

~~D) Lot numbers of the components used in compounding sterile prescriptions/orders traceable to a specific patient, if not included on patient profile and if the preparation is not utilized within 48 hours after preparation.~~

~~f) Delivery Service. The pharmacist-in-charge shall assure the environmental control of all preparations shipped or delivered off site. Therefore, any compounded, sterile pharmaceutical must be shipped or delivered to a patient in temperature controlled (as defined by USP Standards) delivery containers.~~

~~g) Cytotoxic Drugs. The following additional requirements are necessary for those licensed pharmacies that prepare cytotoxic drugs:~~

~~1) Safety and containment techniques or devices for compounding cytotoxic drugs shall be used.~~

~~2) Disposal of cytotoxic waste shall comply with all applicable local, State and federal requirements.~~

~~3) Prepared doses of cytotoxic drugs shall be dispensed, labeled with proper precautions inside and outside, and shipped in a manner to minimize the risk of accidental rupture of the primary container.~~

~~4) The pharmacy must have as a reference Safe Handling of Hazardous Drugs Video Training Program and Workbook (American Society of Health-System Pharmacists (ASHP), 7272 Wisconsin Avenue, Bethesda MD 20814, (301)657-3000, http://www.ashp.org).~~

~~h) Emergency Medications. Pharmacies that dispense compounded sterile preparations to patients in facilities off site or in the patient's residence shall stock supplies and medications appropriate for treatment of allergic or other common adverse effects, to be dispensed upon the prescription or order of an authorized prescriber.~~

(Source: Repealed at 42 Ill. Reg. 20022, effective November 9, 2018)

Section 1330.680 Automated Dispensing and Storage Systems

a) This Section sets forth standards for pharmacies whose practice includes the use of automated dispensing and storage systems. Automated dispensing and storage systems shall not be used in nuclear pharmacies.

b) Automated Dispensing and Storage Systems

1) Documentation as to type of equipment, serial numbers, content, policies and procedures, and locations shall be maintained on-site in the pharmacy for review by the Division. Documentation shall include, but not be limited to:

A) Name and address of the pharmacy or facility where the automated dispensing and storage system is operational;

B) Manufacturer's name and model;

C) Quality assurance policy and procedures to determine continued appropriate use and performance of the automated device; and

D) Policies and procedures for system operation, safety, security, accuracy, patient confidentiality, access, controlled substances, data retention or archival, definitions, downtime procedures, emergency or first dose procedures, inspection, installation requirements, maintenance, medication security, quality assurance, medication inventory, staff education and training, system set-up and malfunction.

2) Automated dispensing and storage systems shall be used only in settings that ensure medication orders and prescriptions are reviewed by a pharmacist in accordance with established policies and procedures and good pharmacy practice. This provision shall not apply when used as an after-hours~~after hours~~ cabinet or emergency kit as provided in Section 1330.530(e).

3) Automated dispensing and storage systems shall have adequate security systems and procedures, evidenced by written pharmacy policies and procedures, to:

A) Prevent unauthorized access or use;

B) Comply with any applicable federal and State regulations; and

C) Maintain patient confidentiality.

4) Records and/or electronic data kept by automated dispensing and storage systems shall meet the following requirements:

A) All events involving access to the contents of the automated dispensing and storage systems must be recorded electronically;

B) Records must be maintained by the pharmacy and must be readily available to the Division. The records shall include:

i) Identity of system accessed;

ii) Identification of the individual accessing the system;

iii) Type of transaction;

iv) Name, strength, dosage form and quantity of the drug accessed;

v) Name of the patient for whom the drug was ordered;

vi) Identification of the registrants stocking or restocking and the pharmacist checking for the accuracy of the medications to be stocked or restocked in the automated dispensing and storage system; and

vii) Such additional information as the pharmacist-in-charge may deem necessary.

5) The stocking or restocking of all medications in the automated dispensing and storage systems shall be accomplished by registrants under the Act or, alternatively, the pharmacist-in-charge may designate a facility's appropriately trained facility employee that is licensed pursuant to the Nurse Practice Act [225 ILCS 65] or Physician Assistant Practice Act of 1987 [225 ILCS 95] to perform the stocking or restocking. A pharmacist-in-charge who delegates stocking/restocking in this manner shall remain responsible for ensuring that the automated dispensing and storage system is stocked/restocked accurately and in accordance with established, written pharmacy policies and procedures.

6) All medications stored in the automated dispensing and storage systems shall be packaged as a unit of use for single patient use (e.g., unit dose tab/cap, tube of ointment, inhaler, etc.) and labeled as specified in this subsection (b)(6):

A) Sterile solutions to which a drug or diluent has been added, or that are not in their original manufacturer's packaging, shall contain the following information on the outer label:

i) Name, concentration and volume of the base sterile solution;

ii) Name and strength of drugs or diluent added;

iii) Date and beyond use date of the admixture. The beyond use date, unless otherwise specified in the individual compendia monograph, shall be no later than the beyond use date on the manufacturer's container or one year from the date the drug is repackaged; and

iv) Reference code to identify source and lot number of drugs or diluent added.

B) Non-parenterals repackaged for future use shall be identified with the following information:

i) Brand and/or generic name;

ii) Strength (if applicable);

iii) Beyond use date. Unless otherwise specified in the individual monograph, the beyond use date shall be no later than the beyond use date on the manufacturer's container or one year from the date the drug is repackaged; and

iv) Reference code to identify source and lot number.

C) Exceptions to the "unit of use" requirements in this subsection (b)(6) are as follows:

i) Injectable medications stored in their original multi-dose vial (e.g., insulin, heparin) when the medication may be withdrawn into a syringe or other delivery device for single patient use; or

ii) Over-the-counter (OTC) products stored in their original multi-dose container (e.g., antacids, analgesics) when the medication may be withdrawn and placed into an appropriate container for single patient use.

D) The pharmacy providing services to the University of Illinois College of Veterinary Medicine shall be exempt from the requirement that all medications stored in the automated dispensing and storage systems be packaged as a unit for single patient use. This exemption is solely for dispensing medications to animals.

7) For medication removed from the system for on-site patient administration, the system must document the following information:

A) Name of the patient or resident;

B) Patient's or resident's unique and permanent identifier, such as admissions number or medical records number;

C) Date and time medication was removed from the system;

D) Name, initials or other unique identifier of the person removing the drug; and

E) Name, strength and dosage form of the drug or description of the medical device removed. The documentation may be on paper, via electronic media or via any other media or mechanisms as set forth by the Act or this Part or as approved by the Division.

8) The automated dispensing and storage systems shall provide a mechanism for securing and accounting for medications once removed from and subsequently returned to the automated dispensing and storage systems (e.g., return bin). No medication or device shall be returned directly to the system for immediate reissue or reuse by a non-registrant under the Act. Medication or devices once removed shall not be reused or reissued except for:

A) Medical devices that can be properly sanitized prior to reuse or reissue; and

B) Medication that is dispensed and stored under conditions defined and supervised by the pharmacist and are unopened in sealed, intact and unaltered containers that meet the standards for light, moisture and air permeation as defined by the current USP/NF, or by the USP Conventions, Inc.

9) The automated dispensing and storage systems shall provide a mechanism for securing and accounting for wasted medications or discarded medications.

10) The quality assurance documentation for the use and performance of the automated dispensing and storage systems shall include at least the following:

A) Safety monitors (e.g., wrong medications removed and administered to patient);

B) Accuracy monitors (e.g., filling errors, wrong medications removed); and

C) Security monitors (e.g., unauthorized access, system security breaches, controlled substance audits).

11) Errors in the use or performance of the automated dispensing and storage systems resulting in patient hospitalization or death shall be reported to the Division by the pharmacist-in-charge within 30 days after acquiring knowledge of the incident.

12) Policy and procedures for the use of the automated dispensing and storage systems shall include a requirement for pharmacist review of the prescription or medication order prior to the system profiling and/or removal of any medication from the system for immediate patient administration. This does not apply to the following situations:

A) The system is being used as an after-hours cabinet for medication dispensing in the absence of a pharmacist (see Section 1330.530(e)(1));

B) The system is being used in place of an emergency kit (see Section 1330.530(e)(2));

C) The system is being used to provide access to medication required to treat the immediate needs of a patient (see Section 1330.530(e)(3)). A sufficient quantity to meet the immediate needs of the patient may be removed until a pharmacist is on duty and available to review the prescription or medication order. A pharmacist shall check the orders promptly once on duty (e.g., floor stock system, emergency department, surgery, ambulatory care or same day surgery, observation unit, etc.).

13) Policies and procedures for the use of the automated dispensing and storage systems shall include the following:

A) List of medications to be stored in each system;

B) List of medications qualifying for emergency or first dose removal without pharmacist prior review of the prescription or medication order.

14) The pharmacist-in-charge shall maintain or have access to all records or documentation specified in this Section for 5 years or as otherwise required by law.

15) A copy of all pharmacy policies and procedures related to the use of an automated dispensing and storage system shall be maintained at all locations where the system is being used.

c) Duties and Responsibilities of the Pharmacist-in-Charge

1) The pharmacist-in-charge shall be responsible for:

A) Assuring that the automated dispensing and storage system is in good working order and accurately provides the correct strength,

dosage form and quantity of the drug prescribed while maintaining appropriate recordkeeping and security safeguards;

B) Establishment of a quality assurance program prior to implementation of an automated dispensing and storage system and the supervision of an ongoing quality assurance program that monitors appropriate use and performance of the automated dispensing and storage system, evidenced by written policies and procedures developed by the pharmacy;

C) Providing the Division with written notice 30 days prior to the installation of, or at the time of removal of, an automated storage and dispensing system. The notice must include, but is not limited to:

i) The name and address of the pharmacy;

ii) The address of the location of the automated dispensing and storage system, if different from the address of the pharmacy;

iii) The automated dispensing and storage system's manufacturer and model;

iv) The pharmacist-in-charge; and

v) A written description of how the facility intends to use the automated storage and dispensing system;

D) Determining and monitoring access to and the limits on access (e.g., security levels) to the automated storage and dispensing system. Access shall be defined by policies and procedures of the pharmacy and shall comply with State and federal regulations.

2) Additional responsibilities of the pharmacist-in-charge or pharmacist designated by the pharmacist-in-charge shall include:

A) Authorizing the assigning of access to, discontinuing access to, or changing access to the system;

B) Ensuring that access to the medications complies with State and federal regulations, as applicable; and

C) Ensuring that the automated dispensing and storage system is stocked/restocked accurately and in accordance with established, written pharmacy policies and procedures.

d) An automated dispensing and storage system is authorized for use in any licensed hospital, long-term care facility, or hospice residence ("facility"). For all nonresident pharmacies, the pharmacist-in-charge and all pharmacy personnel who provide services while physically present at a facility located in Illinois must be licensed in Illinois. In addition to compliance with all other provisions in this Section, an automated dispensing and storage system shall comply with the following:

1) Drugs in the automated dispensing and storage system are not considered dispensed until removed from the system by authorized personnel at the facility, after being released by the pharmacy pursuant to a prescription, unless otherwise provided for in this Part.

2) Only the doses of medication needed for contemporaneous administration may be removed from the automated pharmacy system at one time.

3) Automated dispensing and storage systems utilized at a facility shall operate under the same license as the pharmacy utilizing it.

4) All records shall be maintained for a period of 5 years either at the pharmacy providing services to the facility or a central location where records are readily retrievable.

5) Only pharmacies under common ownership may share an automated pharmacy system at a facility.

(Source: Amended at 42 Ill. Reg. 20022, effective November 9, 2018)

DEPARTMENT OF HEALTHCARE AND FAMILY SERVICES

NOTICE OF ADOPTED AMENDMENT

1) Heading of the Part: Medical Payment

2) Code Citation: 89 Ill. Adm. Code 140

3) Section Number: 140.417 — Adopted Action: Amendment

4) Statutory Authority: Section 12-13 of the Illinois Public Aid Code [305 ILCS 5/12-13]

5) Effective Date of Rule: October 26, 2018

6) Does this rulemaking contain an automatic repeal date? No

7) Does this rulemaking contain incorporations by reference? No

8) A copy of the adopted rule, including any materials incorporated by reference, is on file in the Agency's principal office and is available for public inspection.

9) Notice of Proposal published in the *Illinois Register*: 42 Ill. Reg. 27; January 5, 2018

10) Has JCAR issued a Statement of Objection to this rulemaking? No

11) Differences Between Proposal and Final Version: None

12) Have all the changes agreed upon by the Agency and JCAR been made as indicated in the agreements issued by JCAR? No changes were requested.

13) Will this rulemaking replace an emergency rule currently in effect? No

14) Are there any other rulemakings pending on this Part? Yes

Sections:	Proposed Actions:	*Illinois Register* Citation:
140.3	Amendment	42 Ill. Reg. 7285; April 20, 2018
140.6	Amendment	42 Ill. Reg. 7285; April 20, 2018
140.413	Amendment	42 Ill. Reg. 7285; April 20, 2018
140.421	Amendment	42 Ill. Reg. 8119; May 18, 2018
140.513	Amendment	42 Ill. Reg. 9052; June 8, 2018
140.80	Amendment	42 Ill. Reg. 13411; July 13, 2018
140.452	Amendment	42 Ill. Reg. 14043; July 20, 2018

DEPARTMENT OF HEALTHCARE AND FAMILY SERVICES

NOTICE OF ADOPTED AMENDMENT

140.453	Amendment	42 Ill. Reg. 14043; July 20, 2018
140.455	Amendment	42 Ill. Reg. 14043; July 20, 2018
140.460	Amendment	42 Ill. Reg. 14043; July 20, 2018
140.TABLE N	Amendment	42 Ill. Reg. 14043; July 20, 2018
140.421	Amendment	42 Ill. Reg. 16364; August 31, 2018
140.492	Amendment	42 Ill. Reg. 16364; August 31, 2018
140.TABLE D	Amendment	42 Ill. Reg. 16364; August 31, 2018
140.439	New Section	42 Ill. Reg. 17067; September 28, 2018
140.990	Amendment	42 Ill. Reg. 18242; October 12, 2018
140.991	Amendment	42 Ill. Reg. 18242; October 12, 2018
140.993	Amendment	42 Ill. Reg. 18242; October 12, 2018
140.994	Amendment	42 Ill. Reg. 18242; October 12, 2018
140.995	Repealed	42 Ill. Reg. 18242; October 12, 2018
140.996	Repealed	42 Ill. Reg. 18242; October 12, 2018
140.997	Repealed	42 Ill. Reg. 18242; October 12, 2018
140.462	Amendment	42 Ill. Reg. 19557; November 9, 2018
140.490	Amendment	42 Ill. Reg. 19557; November 9, 2018

15) Summary and Purpose of Rulemaking: This amendment implements PA 100-135 and creates an exception to the Medical Assistance adult eyeglasses limitation. Currently, payment will only be made for one pair of eyeglasses or set of lenses for an adult recipient within a 24-month period. This amendment creates an exception to this policy so that payment can be made for an additional pair of eyeglasses or set of lenses within the 24-month limitation period when an adult recipient receives a surgical procedure that necessitates a new pair or set.

16) Information and questions regarding this adopted rule shall be directed to:

Christopher Gange
Acting General Counsel
Illinois Department of Healthcare and Family Services
201 South Grand Avenue East, 3rd Floor
Springfield IL 62763-0002

HFS.Rules@Illinois.gov

The full text of the Adopted Amendment begins on the next page:

DEPARTMENT OF HEALTHCARE AND FAMILY SERVICES

NOTICE OF ADOPTED AMENDMENT

TITLE 89: SOCIAL SERVICES
CHAPTER I: DEPARTMENT OF HEALTHCARE AND FAMILY SERVICES
SUBCHAPTER d: MEDICAL PROGRAMS

PART 140
MEDICAL PAYMENT

SUBPART A: GENERAL PROVISIONS

Section
140.1 Incorporation By Reference
140.2 Medical Assistance Programs
140.3 Covered Services Under Medical Assistance Programs
140.4 Covered Medical Services Under AFDC-MANG for non-pregnant persons who are 18 years of age or older (Repealed)
140.5 Covered Medical Services Under General Assistance
140.6 Medical Services Not Covered
140.7 Medical Assistance Provided to Individuals Under the Age of Eighteen Who Do Not Qualify for AFDC and Children Under Age Eight
140.8 Medical Assistance For Qualified Severely Impaired Individuals
140.9 Medical Assistance for a Pregnant Woman Who Would Not Be Categorically Eligible for AFDC/AFDC-MANG if the Child Were Already Born Or Who Do Not Qualify As Mandatory Categorically Needy
140.10 Medical Assistance Provided to Persons Confined or Detained by the Criminal Justice System

SUBPART B: MEDICAL PROVIDER PARTICIPATION

Section
140.11 Enrollment Conditions for Medical Providers
140.12 Participation Requirements for Medical Providers
140.13 Definitions
140.14 Denial of Application to Participate in the Medical Assistance Program
140.15 Suspension and Denial of Payment, Recovery of Money and Penalties
140.16 Termination, Suspension or Exclusion of a Vendor's Eligibility to Participate in the Medical Assistance Program
140.17 Suspension of a Vendor's Eligibility to Participate in the Medical Assistance Program
140.18 Effect of Termination, Suspension, Exclusion or Revocation on Persons

DEPARTMENT OF HEALTHCARE AND FAMILY SERVICES

NOTICE OF ADOPTED AMENDMENT

Associated with Vendor
140.19 Application to Participate or for Reinstatement Subsequent to Termination, Suspension, Exclusion or Barring
140.20 Submittal of Claims
140.21 Reimbursement for QMB Eligible Medical Assistance Recipients and QMB Eligible Only Recipients and Individuals Who Are Entitled to Medicare Part A or Part B and Are Eligible for Some Form of Medicaid Benefits
140.22 Magnetic Tape Billings (Repealed)
140.23 Payment of Claims
140.24 Payment Procedures
140.25 Overpayment or Underpayment of Claims
140.26 Payment to Factors Prohibited
140.27 Assignment of Vendor Payments
140.28 Record Requirements for Medical Providers
140.30 Audits
140.31 Emergency Services Audits
140.32 Prohibition on Participation, and Special Permission for Participation
140.33 Publication of List of Sanctioned Entities
140.35 False Reporting and Other Fraudulent Activities
140.40 Prior Approval for Medical Services or Items
140.41 Prior Approval in Cases of Emergency
140.42 Limitation on Prior Approval
140.43 Post Approval for Items or Services When Prior Approval Cannot Be Obtained
140.44 Withholding of Payments Due to Fraud or Misrepresentation
140.45 Withholding of Payments Upon Provider Audit, Quality of Care Review, Credible Allegation of Fraud or Failure to Cooperate
140.55 Electronic Data Interchange Service
140.71 Reimbursement for Medical Services Through the Use of a C-13 Invoice Voucher Advance Payment and Expedited Payments
140.72 Drug Manual (Recodified)
140.73 Drug Manual Updates (Recodified)
140.74 Resolution of Claims Related to Inaccurate or Updated Enrollment Information

SUBPART C: PROVIDER ASSESSMENTS

Section
140.80 Hospital Provider Fund
140.82 Developmentally Disabled Care Provider Fund
140.84 Long Term Care Provider Fund

DEPARTMENT OF HEALTHCARE AND FAMILY SERVICES

NOTICE OF ADOPTED AMENDMENT

140.86	Supportive Living Facility Funds
140.94	Medicaid Developmentally Disabled Provider Participation Fee Trust Fund/Medicaid Long Term Care Provider Participation Fee Trust Fund (Repealed)
140.95	Hospital Services Trust Fund (Repealed)
140.96	General Requirements (Recodified)
140.97	Special Requirements (Recodified)
140.98	Covered Hospital Services (Recodified)
140.99	Hospital Services Not Covered (Recodified)
140.100	Limitation On Hospital Services (Recodified)
140.101	Transplants (Recodified)
140.102	Heart Transplants (Recodified)
140.103	Liver Transplants (Recodified)
140.104	Bone Marrow Transplants (Recodified)
140.110	Disproportionate Share Hospital Adjustments (Recodified)
140.116	Payment for Inpatient Services for GA (Recodified)
140.117	Hospital Outpatient and Clinic Services (Recodified)
140.200	Payment for Hospital Services During Fiscal Year 1982 (Recodified)
140.201	Payment for Hospital Services After June 30, 1982 (Repealed)
140.202	Payment for Hospital Services During Fiscal Year 1983 (Recodified)
140.203	Limits on Length of Stay by Diagnosis (Recodified)
140.300	Payment for Pre-operative Days and Services Which Can Be Performed in an Outpatient Setting (Recodified)
140.350	Copayments (Recodified)
140.360	Payment Methodology (Recodified)
140.361	Non-Participating Hospitals (Recodified)
140.362	Pre July 1, 1989 Services (Recodified)
140.363	Post June 30, 1989 Services (Recodified)
140.364	Prepayment Review (Recodified)
140.365	Base Year Costs (Recodified)
140.366	Restructuring Adjustment (Recodified)
140.367	Inflation Adjustment (Recodified)
140.368	Volume Adjustment (Repealed)
140.369	Groupings (Recodified)
140.370	Rate Calculation (Recodified)
140.371	Payment (Recodified)
140.372	Review Procedure (Recodified)
140.373	Utilization (Repealed)
140.374	Alternatives (Recodified)

DEPARTMENT OF HEALTHCARE AND FAMILY SERVICES

NOTICE OF ADOPTED AMENDMENT

140.375 Exemptions (Recodified)
140.376 Utilization, Case-Mix and Discretionary Funds (Repealed)
140.390 Subacute Alcoholism and Substance Abuse Services (Recodified)
140.391 Definitions (Recodified)
140.392 Types of Subacute Alcoholism and Substance Abuse Services (Recodified)
140.394 Payment for Subacute Alcoholism and Substance Abuse Services (Recodified)
140.396 Rate Appeals for Subacute Alcoholism and Substance Abuse Services (Recodified)
140.398 Hearings (Recodified)

SUBPART D: PAYMENT FOR NON-INSTITUTIONAL SERVICES

Section
140.400 Payment to Practitioners
140.402 Copayments for Noninstitutional Medical Services
140.403 Telehealth Services
140.405 Non-Institutional Rate Reductions
140.410 Physicians' Services
140.411 Covered Services By Physicians
140.412 Services Not Covered By Physicians
140.413 Limitation on Physician Services
140.414 Requirements for Prescriptions and Dispensing of Pharmacy Items – Prescribers
140.416 Optometric Services and Materials
140.417 Limitations on Optometric Services
140.418 Department of Corrections Laboratory
140.420 Dental Services
140.421 Limitations on Dental Services
140.422 Requirements for Prescriptions and Dispensing Items of Pharmacy Items – Dentists (Repealed)
140.423 Licensed Clinical Psychologist Services
140.424 Licensed Clinical Social Worker Services
140.425 Podiatry Services
140.426 Limitations on Podiatry Services
140.427 Requirement for Prescriptions and Dispensing of Pharmacy Items – Podiatry (Repealed)
140.428 Chiropractic Services
140.429 Limitations on Chiropractic Services (Repealed)
140.430 Independent Clinical Laboratory Services
140.431 Services Not Covered by Independent Clinical Laboratories

DEPARTMENT OF HEALTHCARE AND FAMILY SERVICES

NOTICE OF ADOPTED AMENDMENT

140.432 Limitations on Independent Clinical Laboratory Services
140.433 Payment for Clinical Laboratory Services
140.434 Record Requirements for Independent Clinical Laboratories
140.435 Advanced Practice Nurse Services
140.436 Limitations on Advanced Practice Nurse Services
140.438 Diagnostic Imaging Services
140.440 Pharmacy Services
140.441 Pharmacy Services Not Covered
140.442 Prior Approval of Prescriptions
140.443 Filling of Prescriptions
140.444 Compounded Prescriptions
140.445 Legend Prescription Items (Not Compounded)
140.446 Over-the-Counter Items
140.447 Reimbursement
140.448 Returned Pharmacy Items
140.449 Payment of Pharmacy Items
140.450 Record Requirements for Pharmacies
140.451 Prospective Drug Review and Patient Counseling
140.452 Community-based Mental Health Providers Qualified for Payment
140.453 Community-based Mental Health Service Definitions and Professional Qualifications
140.454 Mental Health Services
140.455 Payment for Mental Health Services
140.456 Hearings
140.457 Therapy Services
140.458 Prior Approval for Therapy Services
140.459 Payment for Therapy Services
140.460 Clinic Services
140.461 Clinic Participation, Data and Certification Requirements
140.462 Covered Services in Clinics
140.463 Clinic Service Payment
140.464 Hospital-Based and Encounter Rate Clinic Payments
140.465 Speech and Hearing Clinics (Repealed)
140.466 Rural Health Clinics (Repealed)
140.467 Independent Clinics
140.469 Hospice
140.470 Eligible Home Health Care, Nursing and Public Health Providers
140.471 Description of Home Health Care Services
140.472 Home Health Care Services

DEPARTMENT OF HEALTHCARE AND FAMILY SERVICES

NOTICE OF ADOPTED AMENDMENT

140.473 Prior Approval for Home Health Care Services
140.474 Payment for Home Health Care Services
140.475 Medical Equipment, Supplies, Prosthetic Devices and Orthotic Devices
140.476 Medical Equipment, Supplies, Prosthetic Devices and Orthotic Devices for Which Payment Will Not Be Made
140.477 Limitations on Equipment, Prosthetic Devices and Orthotic Devices
140.478 Prior Approval for Medical Equipment, Supplies, Prosthetic Devices and Orthotic Devices
140.479 Limitations, Medical Supplies
140.480 Equipment Rental Limitations
140.481 Payment for Medical Equipment, Supplies, Prosthetic Devices and Hearing Aids
140.482 Family Planning Services
140.483 Limitations on Family Planning Services
140.484 Payment for Family Planning Services
140.485 Healthy Kids Program
140.486 Illinois Healthy Women
140.487 Healthy Kids Program Timeliness Standards
140.488 Periodicity Schedules, Immunizations and Diagnostic Laboratory Procedures
140.490 Medical Transportation
140.491 Medical Transportation Limitations and Authorization Process
140.492 Payment for Medical Transportation
140.493 Payment for Helicopter Transportation
140.494 Record Requirements for Medical Transportation Services
140.495 Psychological Services
140.496 Payment for Psychological Services
140.497 Hearing Aids
140.498 Fingerprint-Based Criminal Background Checks
140.499 Behavioral Health Clinic

SUBPART E: GROUP CARE

Section
140.500 Long Term Care Services
140.502 Cessation of Payment at Federal Direction
140.503 Cessation of Payment for Improper Level of Care
140.504 Cessation of Payment Because of Termination of Facility
140.505 Informal Hearing Process for Denial of Payment for New ICF/MR
140.506 Provider Voluntary Withdrawal
140.507 Continuation of Provider Agreement

DEPARTMENT OF HEALTHCARE AND FAMILY SERVICES

NOTICE OF ADOPTED AMENDMENT

140.510 Determination of Need for Group Care
140.511 Long Term Care Services Covered By Department Payment
140.512 Utilization Control
140.513 Notification of Change in Resident Status
140.514 Certifications and Recertifications of Care (Repealed)
140.515 Management of Recipient Funds – Personal Allowance Funds
140.516 Recipient Management of Funds
140.517 Correspondent Management of Funds
140.518 Facility Management of Funds
140.519 Use or Accumulation of Funds
140.520 Management of Recipient Funds – Local Office Responsibility
140.521 Room and Board Accounts
140.522 Reconciliation of Recipient Funds
140.523 Bed Reserves
140.524 Cessation of Payment Due to Loss of License
140.525 Quality Incentive Program (QUIP) Payment Levels
140.526 County Contribution to Medicaid Reimbursement (Repealed)
140.527 Quality Incentive Survey (Repealed)
140.528 Payment of Quality Incentive (Repealed)
140.529 Reviews (Repealed)
140.530 Basis of Payment for Long Term Care Services
140.531 General Service Costs
140.532 Health Care Costs
140.533 General Administration Costs
140.534 Ownership Costs
140.535 Costs for Interest, Taxes and Rent
140.536 Organization and Pre-Operating Costs
140.537 Payments to Related Organizations
140.538 Special Costs
140.539 Reimbursement for Basic Nursing Assistant, Developmental Disabilities Aide, Basic Child Care Aide and Habilitation Aide Training and Nursing Assistant Competency Evaluation
140.540 Costs Associated With Nursing Home Care Reform Act and Implementing Regulations
140.541 Salaries Paid to Owners or Related Parties
140.542 Cost Reports – Filing Requirements
140.543 Time Standards for Filing Cost Reports
140.544 Access to Cost Reports (Repealed)
140.545 Penalty for Failure to File Cost Reports

DEPARTMENT OF HEALTHCARE AND FAMILY SERVICES

NOTICE OF ADOPTED AMENDMENT

140.550 Update of Operating Costs
140.551 General Service Costs Updates
140.552 Nursing and Program Costs
140.553 General Administrative Costs Updates
140.554 Component Inflation Index (Repealed)
140.555 Minimum Wage
140.560 Components of the Base Rate Determination
140.561 Support Costs Components
140.562 Nursing Costs
140.563 Capital Costs
140.565 Kosher Kitchen Reimbursement
140.566 Out-of-State Placement
140.567 Level II Incentive Payments (Repealed)
140.568 Duration of Incentive Payments (Repealed)
140.569 Clients With Exceptional Care Needs
140.570 Capital Rate Component Determination
140.571 Capital Rate Calculation
140.572 Total Capital Rate
140.573 Other Capital Provisions
140.574 Capital Rates for Rented Facilities
140.575 Newly Constructed Facilities (Repealed)
140.576 Renovations (Repealed)
140.577 Capital Costs for Rented Facilities (Renumbered)
140.578 Property Taxes
140.579 Specialized Living Centers
140.580 Mandated Capital Improvements (Repealed)
140.581 Qualifying as Mandated Capital Improvement (Repealed)
140.582 Cost Adjustments
140.583 Campus Facilities
140.584 Illinois Municipal Retirement Fund (IMRF)
140.590 Audit and Record Requirements
140.642 Screening Assessment for Nursing Facility and Alternative Residential Settings and Services
140.643 In-Home Care Program
140.645 Home and Community Based Services Waivers for Medically Fragile, Technology Dependent, Disabled Persons Under Age 21 (Repealed)
140.646 Reimbursement for Developmental Training (DT) Services for Individuals With Developmental Disabilities Who Reside in Long Term Care (ICF and SNF) and Residential (ICF/MR) Facilities

DEPARTMENT OF HEALTHCARE AND FAMILY SERVICES

NOTICE OF ADOPTED AMENDMENT

140.647 Description of Developmental Training (DT) Services
140.648 Determination of the Amount of Reimbursement for Developmental Training (DT) Programs
140.649 Effective Dates of Reimbursement for Developmental Training (DT) Programs
140.650 Certification of Developmental Training (DT) Programs
140.651 Decertification of Day Programs
140.652 Terms of Assurances and Contracts
140.680 Effective Date Of Payment Rate
140.700 Discharge of Long Term Care Residents
140.830 Appeals of Rate Determinations
140.835 Determination of Cap on Payments for Long Term Care (Repealed)

SUBPART F: FEDERAL CLAIMING FOR STATE AND LOCAL GOVERNMENTAL ENTITIES

Section
140.850 Reimbursement of Administrative Expenditures
140.855 Administrative Claim Review and Reconsideration Procedure
140.860 County Owned or Operated Nursing Facilities
140.865 Sponsor Qualifications (Repealed)
140.870 Sponsor Responsibilities (Repealed)
140.875 Department Responsibilities (Repealed)
140.880 Provider Qualifications (Repealed)
140.885 Provider Responsibilities (Repealed)
140.890 Payment Methodology (Repealed)
140.895 Contract Monitoring (Repealed)
140.896 Reimbursement For Program Costs (Active Treatment) For Clients in Long Term Care Facilities For the Developmentally Disabled (Recodified)
140.900 Reimbursement For Nursing Costs For Geriatric Residents in Group Care Facilities (Recodified)
140.901 Functional Areas of Needs (Recodified)
140.902 Service Needs (Recodified)
140.903 Definitions (Recodified)
140.904 Times and Staff Levels (Repealed)
140.905 Statewide Rates (Repealed)
140.906 Reconsiderations (Recodified)
140.907 Midnight Census Report (Recodified)
140.908 Times and Staff Levels (Recodified)
140.909 Statewide Rates (Recodified)

DEPARTMENT OF HEALTHCARE AND FAMILY SERVICES

NOTICE OF ADOPTED AMENDMENT

140.910 Referrals (Recodified)
140.911 Basic Rehabilitation Aide Training Program (Recodified)
140.912 Interim Nursing Rates (Recodified)

SUBPART G: MATERNAL AND CHILD HEALTH PROGRAM

Section
140.920 General Description
140.922 Covered Services
140.924 Maternal and Child Health Provider Participation Requirements
140.926 Client Eligibility (Repealed)
140.928 Client Enrollment and Program Components (Repealed)
140.930 Reimbursement
140.932 Payment Authorization for Referrals (Repealed)

SUBPART H: ILLINOIS COMPETITIVE ACCESS AND REIMBURSEMENT EQUITY (ICARE) PROGRAM

Section
140.940 Illinois Competitive Access and Reimbursement Equity (ICARE) Program (Recodified)
140.942 Definition of Terms (Recodified)
140.944 Notification of Negotiations (Recodified)
140.946 Hospital Participation in ICARE Program Negotiations (Recodified)
140.948 Negotiation Procedures (Recodified)
140.950 Factors Considered in Awarding ICARE Contracts (Recodified)
140.952 Closing an ICARE Area (Recodified)
140.954 Administrative Review (Recodified)
140.956 Payments to Contracting Hospitals (Recodified)
140.958 Admitting and Clinical Privileges (Recodified)
140.960 Inpatient Hospital Care or Services by Non-Contracting Hospitals Eligible for Payment (Recodified)
140.962 Payment to Hospitals for Inpatient Services or Care not Provided under the ICARE Program (Recodified)
140.964 Contract Monitoring (Recodified)
140.966 Transfer of Recipients (Recodified)
140.968 Validity of Contracts (Recodified)
140.970 Termination of ICARE Contracts (Recodified)
140.972 Hospital Services Procurement Advisory Board (Recodified)

DEPARTMENT OF HEALTHCARE AND FAMILY SERVICES

NOTICE OF ADOPTED AMENDMENT

140.980 Elimination Of Aid To The Medically Indigent (AMI) Program (Emergency Expired)
140.982 Elimination Of Hospital Services For Persons Age Eighteen (18) And Older And Persons Married And Living With Spouse, Regardless Of Age (Emergency Expired)

SUBPART I: PRIMARY CARE CASE MANAGEMENT PROGRAM

Section
140.990 Primary Care Case Management Program
140.991 Primary Care Provider Participation Requirements
140.992 Populations Eligible to Participate in the Primary Care Case Management Program
140.993 Care Management Fees
140.994 Panel Size and Affiliated Providers
140.995 Mandatory Enrollment
140.996 Access to Health Care Services
140.997 Payment for Services

SUBPART J: ALTERNATE PAYEE PARTICIPATION

Section
140.1001 Registration Conditions for Alternate Payees
140.1002 Participation Requirements for Alternate Payees
140.1003 Recovery of Money for Alternate Payees
140.1004 Conditional Registration for Alternate Payees
140.1005 Revocation of an Alternate Payee

SUBPART K: MANDATORY MCO ENROLLMENT

Section
140.1010 Mandatory Enrollment in MCOs

SUBPART L: UNAUTHORIZED USE OF MEDICAL ASSISTANCE

Section
140.1300 Definitions
140.1310 Recovery of Money
140.1320 Penalties

DEPARTMENT OF HEALTHCARE AND FAMILY SERVICES

NOTICE OF ADOPTED AMENDMENT

140.1330 Enforcement

140.TABLE A	Criteria for Non-Emergency Ambulance Transportation
140.TABLE B	Geographic Areas
140.TABLE C	Capital Cost Areas
140.TABLE D	Schedule of Dental Procedures
140.TABLE E	Time Limits for Processing of Prior Approval Requests
140.TABLE F	Podiatry Service Schedule
140.TABLE G	Travel Distance Standards
140.TABLE H	Areas of Major Life Activity
140.TABLE I	Staff Time and Allocation for Training Programs (Recodified)
140.TABLE J	Rate Regions
140.TABLE K	Services Qualifying for 10% Add-On (Repealed)
140.TABLE L	Services Qualifying for 10% Add-On to Surgical Incentive Add-On (Repealed)
140.TABLE M	Enhanced Rates for Maternal and Child Health Provider Services (Repealed)
140.TABLE N	Program Approval for Specified Behavioral Health Services
140.TABLE O	Criteria for Participation as a Behavioral Health Clinic

AUTHORITY: Implementing and authorized by Articles III, IV, V and VI and Section 12-13 of the Illinois Public Aid Code [305 ILCS 5/Arts. III, IV, V and VI and 12-13].

SOURCE: Adopted at 3 Ill. Reg. 24, p. 166, effective June 10, 1979; rule repealed and new rule adopted at 6 Ill. Reg. 8374, effective July 6, 1982; emergency amendment at 6 Ill. Reg. 8508, effective July 6, 1982, for a maximum of 150 days; amended at 7 Ill. Reg. 681, effective December 30, 1982; amended at 7 Ill. Reg. 7956, effective July 1, 1983; amended at 7 Ill. Reg. 8308, effective July 1, 1983; amended at 7 Ill. Reg. 8271, effective July 5, 1983; emergency amendment at 7 Ill. Reg. 8354, effective July 5, 1983, for a maximum of 150 days; amended at 7 Ill. Reg. 8540, effective July 15, 1983; amended at 7 Ill. Reg. 9382, effective July 22, 1983; amended at 7 Ill. Reg. 12868, effective September 20, 1983; peremptory amendment at 7 Ill. Reg. 15047, effective October 31, 1983; amended at 7 Ill. Reg. 17358, effective December 21, 1983; amended at 8 Ill. Reg. 254, effective December 21, 1983; emergency amendment at 8 Ill. Reg. 580, effective January 1, 1984, for a maximum of 150 days; codified at 8 Ill. Reg. 2483; amended at 8 Ill. Reg. 3012, effective February 22, 1984; amended at 8 Ill. Reg. 5262, effective April 9, 1984; amended at 8 Ill. Reg. 6785, effective April 27, 1984; amended at 8 Ill. Reg. 6983, effective May 9, 1984; amended at 8 Ill. Reg. 7258, effective May 16, 1984; emergency amendment at 8 Ill. Reg. 7910, effective May 22, 1984, for a maximum of 150 days; amended at 8 Ill. Reg. 7910, effective June 1, 1984; amended at 8 Ill. Reg. 10032, effective June 18, 1984; emergency amendment at 8 Ill. Reg. 10062, effective June 20, 1984, for a maximum of 150 days;

amended at 8 Ill. Reg. 13343, effective July 17, 1984; amended at 8 Ill. Reg. 13779, effective July 24, 1984; Sections 140.72 and 140.73 recodified to 89 Ill. Adm. Code 141 at 8 Ill. Reg. 16354; amended (by adding sections being codified with no substantive change) at 8 Ill. Reg. 17899; peremptory amendment at 8 Ill. Reg. 18151, effective September 18, 1984; amended at 8 Ill. Reg. 21629, effective October 19, 1984; peremptory amendment at 8 Ill. Reg. 21677, effective October 24, 1984; amended at 8 Ill. Reg. 22097, effective October 24, 1984; peremptory amendment at 8 Ill. Reg. 22155, effective October 29, 1984; amended at 8 Ill. Reg. 23218, effective November 20, 1984; emergency amendment at 8 Ill. Reg. 23721, effective November 21, 1984, for a maximum of 150 days; amended at 8 Ill. Reg. 25067, effective December 19, 1984; emergency amendment at 9 Ill. Reg. 407, effective January 1, 1985, for a maximum of 150 days; amended at 9 Ill. Reg. 2697, effective February 22, 1985; amended at 9 Ill. Reg. 6235, effective April 19, 1985; amended at 9 Ill. Reg. 8677, effective May 28, 1985; amended at 9 Ill. Reg. 9564, effective June 5, 1985; amended at 9 Ill. Reg. 10025, effective June 26, 1985; emergency amendment at 9 Ill. Reg. 11403, effective June 27, 1985, for a maximum of 150 days; amended at 9 Ill. Reg. 11357, effective June 28, 1985; amended at 9 Ill. Reg. 12000, effective July 24, 1985; amended at 9 Ill. Reg. 12306, effective August 5, 1985; amended at 9 Ill. Reg. 13998, effective September 3, 1985; amended at 9 Ill. Reg. 14684, effective September 13, 1985; amended at 9 Ill. Reg. 15503, effective October 4, 1985; amended at 9 Ill. Reg. 16312, effective October 11, 1985; amended at 9 Ill. Reg. 19138, effective December 2, 1985; amended at 9 Ill. Reg. 19737, effective December 9, 1985; amended at 10 Ill. Reg. 238, effective December 27, 1985; emergency amendment at 10 Ill. Reg. 798, effective January 1, 1986, for a maximum of 150 days; amended at 10 Ill. Reg. 672, effective January 6, 1986; amended at 10 Ill. Reg. 1206, effective January 13, 1986; amended at 10 Ill. Reg. 3041, effective January 24, 1986; amended at 10 Ill. Reg. 6981, effective April 16, 1986; amended at 10 Ill. Reg. 7825, effective April 30, 1986; amended at 10 Ill. Reg. 8128, effective May 7, 1986; emergency amendment at 10 Ill. Reg. 8912, effective May 13, 1986, for a maximum of 150 days; amended at 10 Ill. Reg. 11440, effective June 20, 1986; amended at 10 Ill. Reg. 14714, effective August 27, 1986; amended at 10 Ill. Reg. 15211, effective September 12, 1986; emergency amendment at 10 Ill. Reg. 16729, effective September 18, 1986, for a maximum of 150 days; amended at 10 Ill. Reg. 18808, effective October 24, 1986; amended at 10 Ill. Reg. 19742, effective November 12, 1986; amended at 10 Ill. Reg. 21784, effective December 15, 1986; amended at 11 Ill. Reg. 698, effective December 19, 1986; amended at 11 Ill. Reg. 1418, effective December 31, 1986; amended at 11 Ill. Reg. 2323, effective January 16, 1987; amended at 11 Ill. Reg. 4002, effective February 25, 1987; Section 140.71 recodified to 89 Ill. Adm. Code 141 at 11 Ill. Reg. 4302; amended at 11 Ill. Reg. 4303, effective March 6, 1987; amended at 11 Ill. Reg. 7664, effective April 15, 1987; emergency amendment at 11 Ill. Reg. 9342, effective April 20, 1987, for a maximum of 150 days; amended at 11 Ill. Reg. 9169, effective April 28, 1987; amended at 11 Ill. Reg. 10903, effective June 1, 1987; amended at 11 Ill. Reg. 11528, effective June 22, 1987; amended at 11 Ill. Reg. 12011, effective June 30, 1987; amended at 11 Ill. Reg. 12290, effective

July 6, 1987; amended at 11 Ill. Reg. 14048, effective August 14, 1987; amended at 11 Ill. Reg. 14771, effective August 25, 1987; amended at 11 Ill. Reg. 16758, effective September 28, 1987; amended at 11 Ill. Reg. 17295, effective September 30, 1987; amended at 11 Ill. Reg. 18696, effective October 27, 1987; amended at 11 Ill. Reg. 20909, effective December 14, 1987; amended at 12 Ill. Reg. 916, effective January 1, 1988; emergency amendment at 12 Ill. Reg. 1960, effective January 1, 1988, for a maximum of 150 days; amended at 12 Ill. Reg. 5427, effective March 15, 1988; amended at 12 Ill. Reg. 6246, effective March 16, 1988; amended at 12 Ill. Reg. 6728, effective March 22, 1988; Sections 140.900 thru 140.912 and 140.Table H and 140.Table I recodified to 89 Ill. Adm. Code 147.5 thru 147.205 and 147.Table A and 147.Table B at 12 Ill. Reg. 6956; amended at 12 Ill. Reg. 6927, effective April 5, 1988; Sections 140.940 thru 140.972 recodified to 89 Ill. Adm. Code 149.5 thru 149.325 at 12 Ill. Reg. 7401; amended at 12 Ill. Reg. 7695, effective April 21, 1988; amended at 12 Ill. Reg. 10497, effective June 3, 1988; amended at 12 Ill. Reg. 10717, effective June 14, 1988; emergency amendment at 12 Ill. Reg. 11868, effective July 1, 1988, for a maximum of 150 days; amended at 12 Ill. Reg. 12509, effective July 15, 1988; amended at 12 Ill. Reg. 14271, effective August 29, 1988; emergency amendment at 12 Ill. Reg. 16921, effective September 28, 1988, for a maximum of 150 days; amended at 12 Ill. Reg. 16738, effective October 5, 1988; amended at 12 Ill. Reg. 17879, effective October 24, 1988; amended at 12 Ill. Reg. 18198, effective November 4, 1988; amended at 12 Ill. Reg. 19396, effective November 6, 1988; amended at 12 Ill. Reg. 19734, effective November 15, 1988; amended at 13 Ill. Reg. 125, effective January 1, 1989; amended at 13 Ill. Reg. 2475, effective February 14, 1989; amended at 13 Ill. Reg. 3069, effective February 28, 1989; amended at 13 Ill. Reg. 3351, effective March 6, 1989; amended at 13 Ill. Reg. 3917, effective March 17, 1989; amended at 13 Ill. Reg. 5115, effective April 3, 1989; amended at 13 Ill. Reg. 5718, effective April 10, 1989; amended at 13 Ill. Reg. 7025, effective April 24, 1989; Sections 140.850 thru 140.896 recodified to 89 Ill. Adm. Code 146.5 thru 146.225 at 13 Ill. Reg. 7040; amended at 13 Ill. Reg. 7786, effective May 20, 1989; Sections 140.94 thru 140.398 recodified to 89 Ill. Adm. Code 148.10 thru 148.390 at 13 Ill. Reg. 9572; emergency amendment at 13 Ill. Reg. 10977, effective July 1, 1989, for a maximum of 150 days; emergency expired November 28, 1989; amended at 13 Ill. Reg. 11516, effective July 3, 1989; amended at 13 Ill. Reg. 12119, effective July 7, 1989; Section 140.110 recodified to 89 Ill. Adm. Code 148.120 at 13 Ill. Reg. 12118; amended at 13 Ill. Reg. 12562, effective July 17, 1989; amended at 13 Ill. Reg. 14391, effective August 31, 1989; emergency amendment at 13 Ill. Reg. 15473, effective September 12, 1989, for a maximum of 150 days; amended at 13 Ill. Reg. 16992, effective October 16, 1989; amended at 14 Ill. Reg. 190, effective December 21, 1989; amended at 14 Ill. Reg. 2564, effective February 9, 1990; emergency amendment at 14 Ill. Reg. 3241, effective February 14, 1990, for a maximum of 150 days; emergency expired July 14, 1990; amended at 14 Ill. Reg. 4543, effective March 12, 1990; emergency amendment at 14 Ill. Reg. 4577, effective March 6, 1990, for a maximum of 150 days; emergency expired August 3, 1990; emergency amendment at 14 Ill. Reg. 5575, effective April 1, 1990, for a maximum of 150

days; emergency expired August 29, 1990; emergency amendment at 14 Ill. Reg. 5865, effective April 3, 1990, for a maximum of 150 days; amended at 14 Ill. Reg. 7141, effective April 27, 1990; emergency amendment at 14 Ill. Reg. 7249, effective April 27, 1990, for a maximum of 150 days; amended at 14 Ill. Reg. 10062, effective June 12, 1990; amended at 14 Ill. Reg. 10409, effective June 19, 1990; emergency amendment at 14 Ill. Reg. 12082, effective July 5, 1990, for a maximum of 150 days; amended at 14 Ill. Reg. 13262, effective August 6, 1990; emergency amendment at 14 Ill. Reg. 14184, effective August 16, 1990, for a maximum of 150 days; emergency amendment at 14 Ill. Reg. 14570, effective August 22, 1990, for a maximum of 150 days; amended at 14 Ill. Reg. 14826, effective August 31, 1990; amended at 14 Ill. Reg. 15366, effective September 12, 1990; amended at 14 Ill. Reg. 15981, effective September 21, 1990; amended at 14 Ill. Reg. 17279, effective October 12, 1990; amended at 14 Ill. Reg. 18057, effective October 22, 1990; amended at 14 Ill. Reg. 18508, effective October 30, 1990; amended at 14 Ill. Reg. 18813, effective November 6, 1990; Notice of Corrections to Adopted Amendment at 15 Ill. Reg. 1174; amended at 14 Ill. Reg. 20478, effective December 7, 1990; amended at 14 Ill. Reg. 20729, effective December 12, 1990; amended at 15 Ill. Reg. 298, effective December 28, 1990; emergency amendment at 15 Ill. Reg. 592, effective January 1, 1991, for a maximum of 150 days; amended at 15 Ill. Reg. 1051, effective January 18, 1991; amended at 15 Ill. Reg. 6220, effective April 18, 1991; amended at 15 Ill. Reg. 6534, effective April 30, 1991; amended at 15 Ill. Reg. 8264, effective May 23, 1991; amended at 15 Ill. Reg. 8972, effective June 17, 1991; amended at 15 Ill. Reg. 10114, effective June 21, 1991; amended at 15 Ill. Reg. 10468, effective July 1, 1991; amended at 15 Ill. Reg. 11176, effective August 1, 1991; emergency amendment at 15 Ill. Reg. 11515, effective July 25, 1991, for a maximum of 150 days; emergency expired December 22, 1991; emergency amendment at 15 Ill. Reg. 12919, effective August 15, 1991, for a maximum of 150 days; emergency expired January 12, 1992; emergency amendment at 15 Ill. Reg. 16366, effective October 22, 1991, for a maximum of 150 days; amended at 15 Ill. Reg. 17318, effective November 18, 1991; amended at 15 Ill. Reg. 17733, effective November 22, 1991; emergency amendment at 16 Ill. Reg. 300, effective December 20, 1991, for a maximum of 150 days; amended at 16 Ill. Reg. 174, effective December 24, 1991; amended at 16 Ill. Reg. 1877, effective January 24, 1992; amended at 16 Ill. Reg. 3552, effective February 28, 1992; amended at 16 Ill. Reg. 4006, effective March 6, 1992; amended at 16 Ill. Reg. 6408, effective March 20, 1992; expedited correction at 16 Ill. Reg. 11348, effective March 20, 1992; amended at 16 Ill. Reg. 6849, effective April 7, 1992; amended at 16 Ill. Reg. 7017, effective April 17, 1992; amended at 16 Ill. Reg. 10050, effective June 5, 1992; amended at 16 Ill. Reg. 11174, effective June 26, 1992; emergency amendment at 16 Ill. Reg. 11947, effective July 10, 1992, for a maximum of 150 days; amended at 16 Ill. Reg. 12186, effective July 24, 1992; emergency amendment at 16 Ill. Reg. 13337, effective August 14, 1992, for a maximum of 150 days; emergency amendment at 16 Ill. Reg. 15109, effective September 21, 1992, for a maximum of 150 days; amended at 16 Ill. Reg. 15561, effective September 30, 1992; amended at 16 Ill. Reg. 17302, effective November 2, 1992; emergency amendment at 16

DEPARTMENT OF HEALTHCARE AND FAMILY SERVICES

NOTICE OF ADOPTED AMENDMENT

Ill. Reg. 18097, effective November 17, 1992, for a maximum of 150 days; amended at 16 Ill. Reg. 19146, effective December 1, 1992; expedited correction at 17 Ill. Reg. 7078, effective December 1, 1992; amended at 16 Ill. Reg. 19879, effective December 7, 1992; amended at 17 Ill. Reg. 837, effective January 11, 1993; amended at 17 Ill. Reg. 1112, effective January 15, 1993; amended at 17 Ill. Reg. 2290, effective February 15, 1993; amended at 17 Ill. Reg. 2951, effective February 17, 1993; amended at 17 Ill. Reg. 3421, effective February 19, 1993; amended at 17 Ill. Reg. 6196, effective April 5, 1993; amended at 17 Ill. Reg. 6839, effective April 21, 1993; amended at 17 Ill. Reg. 7004, effective May 17, 1993; emergency amendment at 17 Ill. Reg. 11201, effective July 1, 1993, for a maximum of 150 days; emergency amendment at 17 Ill. Reg. 15162, effective September 2, 1993, for a maximum of 150 days; emergency amendment suspended at 17 Ill. Reg. 18902, effective October 12, 1993; emergency amendment at 17 Ill. Reg. 18152, effective October 1, 1993, for a maximum of 150 days; amended at 17 Ill. Reg. 18571, effective October 8, 1993; emergency amendment at 17 Ill. Reg. 18611, effective October 1, 1993, for a maximum of 150 days; amended at 17 Ill. Reg. 20999, effective November 24, 1993; emergency amendment repealed at 17 Ill. Reg. 22583, effective December 20, 1993; amended at 18 Ill. Reg. 3620, effective February 28, 1994; amended at 18 Ill. Reg. 4250, effective March 4, 1994; amended at 18 Ill. Reg. 5951, effective April 1, 1994; emergency amendment at 18 Ill. Reg. 10922, effective July 1, 1994, for a maximum of 150 days; emergency amendment suspended at 18 Ill. Reg. 17286, effective November 15, 1994; emergency amendment repealed at 19 Ill. Reg. 5839, effective April 4, 1995; amended at 18 Ill. Reg. 11244, effective July 1, 1994; amended at 18 Ill. Reg. 14126, effective August 29, 1994; amended at 18 Ill. Reg. 16675, effective November 1, 1994; amended at 18 Ill. Reg. 18059, effective December 19, 1994; amended at 19 Ill. Reg. 1082, effective January 20, 1995; amended at 19 Ill. Reg. 2933, effective March 1, 1995; emergency amendment at 19 Ill. Reg. 3529, effective March 1, 1995, for a maximum of 150 days; amended at 19 Ill. Reg. 5663, effective April 1, 1995; amended at 19 Ill. Reg. 7919, effective June 5, 1995; emergency amendment at 19 Ill. Reg. 8455, effective June 9, 1995, for a maximum of 150 days; emergency amendment at 19 Ill. Reg. 9297, effective July 1, 1995, for a maximum of 150 days; emergency amendment at 19 Ill. Reg. 10252, effective July 1, 1995, for a maximum of 150 days; amended at 19 Ill. Reg. 13019, effective September 5, 1995; amended at 19 Ill. Reg. 14440, effective September 29, 1995; emergency amendment at 19 Ill. Reg. 14833, effective October 6, 1995, for a maximum of 150 days; amended at 19 Ill. Reg. 15441, effective October 26, 1995; amended at 19 Ill. Reg. 15692, effective November 6, 1995; amended at 19 Ill. Reg. 16677, effective November 28, 1995; amended at 20 Ill. Reg. 1210, effective December 29, 1995; amended at 20 Ill. Reg. 4345, effective March 4, 1996; amended at 20 Ill. Reg. 5858, effective April 5, 1996; amended at 20 Ill. Reg. 6929, effective May 6, 1996; amended at 20 Ill. Reg. 7922, effective May 31, 1996; amended at 20 Ill. Reg. 9081, effective June 28, 1996; emergency amendment at 20 Ill. Reg. 9312, effective July 1, 1996, for a maximum of 150 days; amended at 20 Ill. Reg. 11332, effective August 1, 1996; amended at 20 Ill. Reg. 14845, effective October 31, 1996; emergency

amendment at 21 Ill. Reg. 705, effective December 31, 1996, for a maximum of 150 days; emergency amendment at 21 Ill. Reg. 3734, effective March 5, 1997, for a maximum of 150 days; amended at 21 Ill. Reg. 4777, effective April 2, 1997; amended at 21 Ill. Reg. 6899, effective May 23, 1997; amended at 21 Ill. Reg. 9763, effective July 15, 1997; amended at 21 Ill. Reg. 11569, effective August 1, 1997; emergency amendment at 21 Ill. Reg. 13857, effective October 1, 1997, for a maximum of 150 days; amended at 22 Ill. Reg. 1416, effective December 29, 1997; amended at 22 Ill. Reg. 4412, effective February 27, 1998; amended at 22 Ill. Reg. 7024, effective April 1, 1998; amended at 22 Ill. Reg. 10606, effective June 1, 1998; emergency amendment at 22 Ill. Reg. 13117, effective July 1, 1998, for a maximum of 150 days; amended at 22 Ill. Reg. 16302, effective August 28, 1998; amended at 22 Ill. Reg. 18979, effective September 30, 1998; amended at 22 Ill. Reg. 19898, effective October 30, 1998; emergency amendment at 22 Ill. Reg. 22108, effective December 1, 1998, for a maximum of 150 days; emergency expired April 29, 1999; amended at 23 Ill. Reg. 5796, effective April 30, 1999; amended at 23 Ill. Reg. 7122, effective June 1, 1999; emergency amendment at 23 Ill. Reg. 8236, effective July 1, 1999, for a maximum of 150 days; amended at 23 Ill. Reg. 9874, effective August 3, 1999; amended at 23 Ill. Reg. 12697, effective October 1, 1999; amended at 23 Ill. Reg. 13646, effective November 1, 1999; amended at 23 Ill. Reg. 14567, effective December 1, 1999; amended at 24 Ill. Reg. 661, effective January 3, 2000; amended at 24 Ill. Reg. 10277, effective July 1, 2000; emergency amendment at 24 Ill. Reg. 10436, effective July 1, 2000, for a maximum of 150 days; amended at 24 Ill. Reg. 15086, effective October 1, 2000; amended at 24 Ill. Reg. 18320, effective December 1, 2000; emergency amendment at 24 Ill. Reg. 19344, effective December 15, 2000, for a maximum of 150 days; amended at 25 Ill. Reg. 3897, effective March 1, 2001; amended at 25 Ill. Reg. 6665, effective May 11, 2001; amended at 25 Ill. Reg. 8793, effective July 1, 2001; emergency amendment at 25 Ill. Reg. 8850, effective July 1, 2001, for a maximum of 150 days; amended at 25 Ill. Reg. 11880, effective September 1, 2001; amended at 25 Ill. Reg. 12820, effective October 8, 2001; amended at 25 Ill. Reg. 14957, effective November 1, 2001; emergency amendment at 25 Ill. Reg. 16127, effective November 28, 2001, for a maximum of 150 days; emergency amendment at 25 Ill. Reg. 16292, effective December 3, 2001, for a maximum of 150 days; emergency amendment at 26 Ill. Reg. 514, effective January 1, 2002, for a maximum of 150 days; amended at 26 Ill. Reg. 663, effective January 7, 2002; amended at 26 Ill. Reg. 4781, effective March 15, 2002; emergency amendment at 26 Ill. Reg. 5984, effective April 15, 2002, for a maximum of 150 days; amended at 26 Ill. Reg. 7285, effective April 29, 2002; emergency amendment at 26 Ill. Reg. 8594, effective June 1, 2002, for a maximum of 150 days; emergency amendment at 26 Ill. Reg. 11259, effective July 1, 2002, for a maximum of 150 days; emergency amendment at 26 Ill. Reg. 12461, effective July 29, 2002, for a maximum of 150 days; emergency amendment repealed at 26 Ill. Reg. 16593, effective October 22, 2002; emergency amendment at 26 Ill. Reg. 12772, effective August 12, 2002, for a maximum of 150 days; amended at 26 Ill. Reg. 13641, effective September 3, 2002; amended at 26 Ill. Reg. 14789, effective September 26, 2002; emergency amendment at 26 Ill.

Reg. 15076, effective October 1, 2002, for a maximum of 150 days; amended at 26 Ill. Reg. 16303, effective October 25, 2002; amended at 26 Ill. Reg. 17751, effective November 27, 2002; amended at 27 Ill. Reg. 768, effective January 3, 2003; amended at 27 Ill. Reg. 3041, effective February 10, 2003; amended at 27 Ill. Reg. 4364, effective February 24, 2003; amended at 27 Ill. Reg. 7823, effective May 1, 2003; amended at 27 Ill. Reg. 9157, effective June 2, 2003; emergency amendment at 27 Ill. Reg. 10813, effective July 1, 2003, for a maximum of 150 days; amended at 27 Ill. Reg. 13784, effective August 1, 2003; amended at 27 Ill. Reg. 14799, effective September 5, 2003; emergency amendment at 27 Ill. Reg. 15584, effective September 20, 2003, for a maximum of 150 days; emergency amendment at 27 Ill. Reg. 16161, effective October 1, 2003, for a maximum of 150 days; amended at 27 Ill. Reg. 18629, effective November 26, 2003; amended at 28 Ill. Reg. 2744, effective February 1, 2004; amended at 28 Ill. Reg. 4958, effective March 3, 2004; emergency amendment at 28 Ill. Reg. 6622, effective April 19, 2004, for a maximum of 150 days; amended at 28 Ill. Reg. 7081, effective May 3, 2004; emergency amendment at 28 Ill. Reg. 8108, effective June 1, 2004, for a maximum of 150 days; amended at 28 Ill. Reg. 9640, effective July 1, 2004; emergency amendment at 28 Ill. Reg. 10135, effective July 1, 2004, for a maximum of 150 days; amended at 28 Ill. Reg. 11161, effective August 1, 2004; emergency amendment at 28 Ill. Reg. 12198, effective August 11, 2004, for a maximum of 150 days; amended at 28 Ill. Reg. 13775, effective October 1, 2004; amended at 28 Ill. Reg. 14804, effective October 27, 2004; amended at 28 Ill. Reg. 15513, effective November 24, 2004; amended at 29 Ill. Reg. 831, effective January 1, 2005; amended at 29 Ill. Reg. 6945, effective May 1, 2005; emergency amendment at 29 Ill. Reg. 8509, effective June 1, 2005, for a maximum of 150 days; emergency amendment at 29 Ill. Reg. 12534, effective August 1, 2005, for a maximum of 150 days; amended at 29 Ill. Reg. 14957, effective September 30, 2005; emergency amendment at 29 Ill. Reg. 15064, effective October 1, 2005, for a maximum of 150 days; emergency amendment repealed by emergency rulemaking at 29 Ill. Reg. 15985, effective October 5, 2005, for the remainder of the 150 days; emergency amendment at 29 Ill. Reg. 15610, effective October 1, 2005, for a maximum of 150 days; emergency amendment at 29 Ill. Reg. 16515, effective October 5, 2005, for a maximum of 150 days; amended at 30 Ill. Reg. 349, effective December 28, 2005; emergency amendment at 30 Ill. Reg. 573, effective January 1, 2006, for a maximum of 150 days; amended at 30 Ill. Reg. 796, effective January 1, 2006; amended at 30 Ill. Reg. 2802, effective February 24, 2006; amended at 30 Ill. Reg. 10370, effective May 26, 2006; emergency amendment at 30 Ill. Reg. 12376, effective July 1, 2006, for a maximum of 150 days; emergency amendment at 30 Ill. Reg. 13909, effective August 2, 2006, for a maximum of 150 days; amended at 30 Ill. Reg. 14280, effective August 18, 2006; expedited correction at 31 Ill. Reg. 1745, effective August 18, 2006; emergency amendment at 30 Ill. Reg. 17970, effective November 1, 2006, for a maximum of 150 days; amended at 30 Ill. Reg. 18648, effective November 27, 2006; emergency amendment at 30 Ill. Reg. 19400, effective December 1, 2006, for a maximum of 150 days; amended at 31 Ill. Reg. 388, effective December 29, 2006; emergency amendment at 31 Ill. Reg. 1580, effective

January 1, 2007, for a maximum of 150 days; amended at 31 Ill. Reg. 2413, effective January 19, 2007; amended at 31 Ill. Reg. 5561, effective March 30, 2007; amended at 31 Ill. Reg. 6930, effective April 29, 2007; amended at 31 Ill. Reg. 8485, effective May 30, 2007; emergency amendment at 31 Ill. Reg. 10115, effective June 30, 2007, for a maximum of 150 days; amended at 31 Ill. Reg. 14749, effective October 22, 2007; emergency amendment at 32 Ill. Reg. 383, effective January 1, 2008, for a maximum of 150 days; peremptory amendment at 32 Ill. Reg. 6743, effective April 1, 2008; peremptory amendment suspended at 32 Ill. Reg. 8449, effective May 21, 2008; suspension withdrawn by the Joint Committee on Administrative Rules at 32 Ill. Reg. 18323, effective November 12, 2008; peremptory amendment repealed by emergency rulemaking at 32 Ill. Reg. 18422, effective November 12, 2008, for a maximum of 150 days; emergency expired April 10, 2009; peremptory amendment repealed at 33 Ill. Reg. 6667, effective April 29, 2009; amended at 32 Ill. Reg. 7727, effective May 5, 2008; emergency amendment at 32 Ill. Reg. 10480, effective July 1, 2008, for a maximum of 150 days; emergency expired November 27, 2008; amended at 32 Ill. Reg. 17133, effective October 15, 2008; amended at 33 Ill. Reg. 209, effective December 29, 2008; amended at 33 Ill. Reg. 9048, effective June 15, 2009; emergency amendment at 33 Ill. Reg. 10800, effective June 30, 2009, for a maximum of 150 days; amended at 33 Ill. Reg. 11287, effective July 14, 2009; amended at 33 Ill. Reg. 11938, effective August 17, 2009; amended at 33 Ill. Reg. 12227, effective October 1, 2009; emergency amendment at 33 Ill. Reg. 14324, effective October 1, 2009, for a maximum of 150 days; emergency expired February 27, 2010; amended at 33 Ill. Reg. 16573, effective November 16, 2009; amended at 34 Ill. Reg. 516, effective January 1, 2010; amended at 34 Ill. Reg. 903, effective January 29, 2010; amended at 34 Ill. Reg. 3761, effective March 14, 2010; amended at 34 Ill. Reg. 5215, effective March 25, 2010; amended at 34 Ill. Reg. 19517, effective December 6, 2010; amended at 35 Ill. Reg. 394, effective December 27, 2010; amended at 35 Ill. Reg. 7648, effective May 1, 2011; amended at 35 Ill. Reg. 7962, effective May 1, 2011; amended at 35 Ill. Reg. 10000, effective June 15, 2011; amended at 35 Ill. Reg. 12909, effective July 25, 2011; amended at 36 Ill. Reg. 2271, effective February 1, 2012; amended at 36 Ill. Reg. 7010, effective April 27, 2012; amended at 36 Ill. Reg. 7545, effective May 7, 2012; amended at 36 Ill. Reg. 9113, effective June 11, 2012; emergency amendment at 36 Ill. Reg. 11329, effective July 1, 2012 through June 30, 2013; emergency amendment to Section 140.442(e)(4) suspended at 36 Ill. Reg. 13736, effective August 15, 2012; suspension withdrawn from Section 140.442(e)(4) at 36 Ill. Reg. 14529, September 11, 2012; emergency amendment in response to Joint Committee on Administrative Rules action on Section 140.442(e)(4) at 36 Ill. Reg. 14820, effective September 21, 2012 through June 30, 2013; emergency amendment to Section 140.491 suspended at 36 Ill. Reg. 13738, effective August 15, 2012; suspension withdrawn by the Joint Committee on Administrative Rules from Section 140.491 at 37 Ill. Reg. 890, January 8, 2013; emergency amendment in response to Joint Committee on Administrative Rules action on Section 140.491 at 37 Ill. Reg. 1330, effective January 15, 2013 through June 30, 2013; amended at 36 Ill. Reg. 15361, effective October 15, 2012; emergency amendment at 37 Ill. Reg. 253,

effective January 1, 2013 through June 30, 2013; emergency amendment at 37 Ill. Reg. 846, effective January 9, 2013 through June 30, 2013; emergency amendment at 37 Ill. Reg. 1774, effective January 28, 2013 through June 30, 2013; emergency amendment at 37 Ill. Reg. 2348, effective February 1, 2013 through June 30, 2013; amended at 37 Ill. Reg. 3831, effective March 13, 2013; emergency amendment at 37 Ill. Reg. 5058, effective April 1, 2013 through June 30, 2013; emergency amendment at 37 Ill. Reg. 5170, effective April 8, 2013 through June 30, 2013; amended at 37 Ill. Reg. 6196, effective April 29, 2013; amended at 37 Ill. Reg. 7985, effective May 29, 2013; amended at 37 Ill. Reg. 10282, effective June 27, 2013; amended at 37 Ill. Reg. 12855, effective July 24, 2013; emergency amendment at 37 Ill. Reg. 14196, effective August 20, 2013, for a maximum of 150 days; amended at 37 Ill. Reg. 17584, effective October 23, 2013; amended at 37 Ill. Reg. 18275, effective November 4, 2013; amended at 37 Ill. Reg. 20339, effective December 9, 2013; amended at 38 Ill. Reg. 859, effective December 23, 2013; emergency amendment at 38 Ill. Reg. 1174, effective January 1, 2014, for a maximum of 150 days; amended at 38 Ill. Reg. 4330, effective January 29, 2014; amended at 38 Ill. Reg. 7156, effective March 13, 2014; amended at 38 Ill. Reg. 12141, effective May 30, 2014; amended at 38 Ill. Reg. 15081, effective July 2, 2014; emergency amendment at 38 Ill. Reg. 15673, effective July 7, 2014, for a maximum of 150 days; emergency amendment at 38 Ill. Reg. 18216, effective August 18, 2014, for a maximum of 150 days; amended at 38 Ill. Reg. 18462, effective August 19, 2014; amended at 38 Ill. Reg. 23623, effective December 2, 2014; amended at 39 Ill. Reg. 4394, effective March 11, 2015; emergency amendment at 39 Ill. Reg. 6903, effective May 1, 2015 through June 30, 2015; emergency amendment at 39 Ill. Reg. 8137, effective May 20, 2015, for a maximum of 150 days; emergency amendment at 39 Ill. Reg. 10427, effective July 10, 2015, for a maximum of 150 days; emergency expired December 6, 2015; amended at 39 Ill. Reg. 12825, effective September 4, 2015; amended at 39 Ill. Reg. 13380, effective September 25, 2015; amended at 39 Ill. Reg. 14138, effective October 14, 2015; emergency amendment at 40 Ill. Reg. 13677, effective September 16, 2016, for a maximum of 150 days; emergency expired February 12, 2017; amended at 41 Ill. Reg. 999, effective January 19, 2017; amended at 41 Ill. Reg. 3296, effective March 8, 2017; amended at 41 Ill. Reg. 7526, effective June 15, 2017; amended at 41 Ill. Reg. 10950, effective August 9, 2017; amended at 42 Ill. Reg. 4829, effective March 1, 2018; amended at 42 Ill. Reg. 12986, effective June 25, 2018; emergency amendment at 42 Ill. Reg. 13688, effective July 2, 2018, for a maximum of 150 days; emergency amendment to emergency rule at 42 Ill. Reg. 16265, effective August 13, 2018, for the remainder of the 150 days; amended at 42 Ill. Reg. 14383, effective July 23, 2018; amended at 42 Ill. Reg. 20059, effective October 26, 2018.

SUBPART D: PAYMENT FOR NON-INSTITUTIONAL SERVICES

Section 140.417 Limitations on Optometric Services

DEPARTMENT OF HEALTHCARE AND FAMILY SERVICES

NOTICE OF ADOPTED AMENDMENT

Payment for the following optometric services and materials shall be made subject to the following limitations:

a) Payment shall be made for single vision lenses only when the following conditions are met:

1) The power is at least 0.75 diopters in either the sphere or cylinder component; or

2) The difference between the old and new prescription is at least 0.75 diopters in either the sphere or cylinder component.

b) Payment shall be made for bifocal lenses only when the following conditions are met:

1) For first bifocals, the power of the bifocal addition is at least 1.00 diopter.

2) For a change in bifocal lenses, the power of the bifocal addition is changed by at least 0.50 diopters or the distance power represents a change of at least 0.75 diopters.

c) Payment shall be made for more than one examination per year only when the vendor documents the need for the additional examination.

d) Effective July 1, 2012, payment shall be made for the following:

1) One~~one~~ pair of eyeglasses or set of lenses for adults in a 24-month period. Effective August 18, 2017, adults 21 years of age and older may receive an additional pair of eyeglasses or set of lenses within the 24-month period if the patient has had a surgical procedure that necessitates a new pair.

2) Payment shall be made for more than one pair of eyeglasses or set of lenses per year for children through age 20 only when the physician or optometrist documents:

A~~1~~) that:

i~~A~~) the most recent pair of eyeglasses or set of lenses was lost or destroyed for reasons beyond the control of the recipient;

or

ii~~B~~) there is a change in the prescription that meets the requirements in subsection (a)(2) or (b)(2); and

B~~2~~) that the additional pair is medically necessary.

e) Payment for optometric materials dispensed by a supplier other than a physician or optometrist, except for replacement and repair items, shall be made only when they are prescribed by a licensed physician or optometrist.

f) Effective July 1, 2012, prior approval pursuant to Section 140.40 is required for the services and materials described in this subsection (f). Approval shall be given when, in the judgment of a Department consultant, the requested item or service is appropriate.

1) Contact lenses and related contact lens services;

2) Custom made artificial eyes;

3) Low vision devices; ~~and~~

4) Any item or service not specifically included in the schedule of procedures for optical services and supplies; and~~.~~

5) An additional pair of eyeglasses or set of lenses within a 24-month period for adults 21 years of age and older after eye surgery.

(Source: Amended at 42 Ill. Reg. 20059, effective October 26, 2018)

DEPARTMENT OF HUMAN SERVICES

NOTICE OF ADOPTED AMENDMENTS

1) Heading of the Part: Administration of Medication in Community Settings

2) Code Citation: 59 Ill. Adm. Code 116

3)

Section Numbers:	Adopted Actions:
116.10	Amendment
116.20	Amendment

4) Statutory Authority: Implementing and authorized by Section 15.4 of the Mental Health and Developmental Disabilities Administrative Act [20 ILCS 1705/15.4].

5) Effective Date of Rules: October 23, 2018

6) Does this rulemaking contain an automatic repeal date? No

7) Does this rulemaking contain incorporations by reference? No

8) A copy of the adopted rules, including any material incorporated, is on file in the Agency's principal office and is available for public inspection.

9) Notice of Proposal published in the *Illinois Register*: 42 Ill. Reg. 13422; July 13, 2018

10) Has JCAR issued a Statement of Objection to this rulemaking? No

11) Differences between Proposal and Final Version: No substantive changes were made to the text of the proposed rulemaking.

12) Have all changes agreed upon by the Agency and JCAR been made as indicated in the agreements issued by JCAR? Yes

13) Will this rulemaking replace an emergency rule currently in effect? No

14) Are there any rulemakings pending on this Part? No

15) Summary and Purpose of Rulemaking: This rulemaking was proposed in response to PA 100-0050 which revised 20 ILCS 1705/15.4, a section of the Mental Health and Developmental Disabilities Act. This rulemaking supports the Department's commitment to re-balancing individuals with a developmental disability from institutional settings to

community-based services by extending the rule to community day services and by adding a definition of "Community Day Services" to a Section.

16) Information and questions regarding these adopted rules shall be directed to:

Tracie Drew, Chief
Department of Human Services
100 South Grand Avenue East
Harris Building, 3rd Floor
Springfield IL 62762

217/785-9772

The full text of the Adopted Amendments begins on the next page:

DEPARTMENT OF HUMAN SERVICES

NOTICE OF ADOPTED AMENDMENTS

TITLE 59: MENTAL HEALTH
CHAPTER I: DEPARTMENT OF HUMAN SERVICES

PART 116
ADMINISTRATION OF MEDICATION
IN COMMUNITY SETTINGS

Section

116.10 Purpose
116.20 Definitions
116.30 Master Nurse-Trainer and Nurse-Trainers
116.40 Training and Authorization of Non-Licensed Staff by Nurse-Trainers
116.50 Administration of Medications
116.60 Medication Self-Administration
116.70 Medication Administration Record and Required Documentation
116.80 Storage and Disposal of Medications
116.90 Individual Health Supports and Assessment
116.100 Quality Assurance
116.110 Administrative Requirements

AUTHORITY: Implementing and authorized by Section 15.4 of the Mental Health and Developmental Disabilities Administrative Act [20 ILCS 1705/15.4].

SOURCE: Emergency rule adopted at 23 Ill. Reg. 11988, effective September 13, 1999, for a maximum of 150 days; adopted at 24 Ill. Reg. 2656, effective February 7, 2000; amended at 41 Ill. Reg. 6534, effective May 26, 2017; amended at 42 Ill. Reg. 20083, effective October 23, 2018.

Section 116.10 Purpose

The purpose of this Part is to ensure the safety of individuals in programs funded by the Department of Human Services by regulating the storage, distribution and administration of medications in specific settings, as well as training of non-licensed staff in the administration of medications. This applies exclusively to all programs for individuals with ~~a~~ developmental disabilities~~disability~~ in:

a) community day services;

b) residential settings of 16 persons or fewer that are funded, certified or licensed by

DHS and that distribute or administer medications; and

c) all intermediate care facilities for persons with developmental disabilities~~the developmentally disabled~~ with 16 beds or fewer that are licensed by the Illinois Department of Public Health.

(Source: Amended at 42 Ill. Reg. 20083, effective October 23, 2018)

Section 116.20 Definitions

The words and phrases used in this Part shall mean the following, except when a different meaning is clearly intended from the context:

"Administer" or "Administration" − An act in which a single dose of medication is instilled into the body of, applied to the body of, or otherwise given to a person for immediate consumption or use.

"Adverse drug reaction" − A person's response to medication that has an undesirable effect and may be harmful to the health of a person. The reaction may be temporary and resolve itself without lasting effects or it may require interventions to be resolved.

"Agency" − Any organization that operates a residential program for persons with developmental disabilities.

"Authorized direct care staff" − Non-licensed persons who have successfully completed a medication administration training program specified *by the* Illinois *Department of Human Services and conducted by a* Nurse-Trainer. *This authorization*, that can only be conferred by a Nurse-Trainer, *is specific to an individual receiving* services *in a specific agency and does not transfer to another agency* or individual. [20 ILCS 1705/15.4(b)]

"Community day services" – Assists with the acquisition, retention, or improvement in self-help, socialization, and adaptive skills that takes place in a non-residential setting, separate from the participant's private residence or other residential living arrangement. Activities and environments are designed to foster the acquisition of skills, appropriate behavior, greater independence, and personal choice.

"Community residence" − Any residence funded by DHS and provided by a licensed agency, or a residential setting certified or approved by DHS, or an intermediate care facility for 16 or fewer persons with developmental disabilities, licensed by the Illinois Department of Public Health as an Intermediate Care Facility for the Developmentally Disabled, 16 beds or fewer.

"Competency-based" − Training that is tied to an identified set of skills and knowledge and requires documentation of an acceptable level of performance of a task or achievement of an outcome.

"Controlled substance" − Any drug or other substance listed pursuant to a schedule in the Illinois Controlled Substances Act [720 ILCS 570].

"Days" − Unless otherwise indicated, all references to days in this Part refer to working days.

"DD Medical Director" − The physician serving as the Medical Director of the Division of Developmental Disabilities within the Illinois Department of Human Services (DHS-DD), or his or her designee.

"Delegation" − The transfer of responsibility for the performance of selected tasks by the registered nurse (RN) to authorized direct care staff in a selected situation, based upon the RN's plan of care. The RN retains professional accountability for the outcome of the delegated task and all the nursing care of the individual. No redelegation by authorized direct care staff may occur.

"Department" or "DHS" − The Illinois Department of Human Services.

"Distribute or distribution" − The act of controlling access to medications and allowing access by individuals to their medications at prescribed times.

"DPH" − The Illinois Department of Public Health.

"Findings" − An indicated determination by the Department of Children and Family Services under 89 Ill. Adm. Code 300, a substantiated case or verified determination by the Department on Aging under 89 Ill. Adm. Code 270, or a substantiated finding by the Department of Human Services Office of Inspector General under 59 Ill. Adm. Code 50.

"Functional literacy" − An individual's ability to read, write, speak, compute and solve problems at levels of proficiency necessary to function on the job, as assessed by standardized techniques.

"Guardian" − The parent of a child under the age of 18 whose parental rights have not been terminated or a person appointed by a court to be guardian of the individual.

"HFS" − The Illinois Department of Healthcare and Family Services.

"Insulin in an injectable form" − A *subcutaneous injection via an insulin pen pre-filled by the manufacturer*. [20 ILCS 1705/15.4(b)]

"Individual" − Any person with a developmental disability receiving services from a program.

"Intermediate care facility for the developmentally disabled" or "ICF/DD-16". A residence licensed by DPH to provide health or habilitative care on a long-term basis for 16 or fewer individuals with developmental disabilities.

"Licensed person or personnel" − A physician, a registered professional nurse, an advanced practice nurse, a licensed practical nurse, a dentist, a pharmacist, a physician assistant, an optometrist, or a podiatrist licensed in the State of Illinois.

"Master Nurse-Trainer" − An agent of DHS who is a registered professional nurse who has been designated by the DD Medical Director to train/educate Nurse-Trainers.

"Medication" − *Means oral and topical medications, insulin in an injectable form, oxygen, epinephrine auto-injectors, and vaginal and rectal creams and suppositories as* prescribed for the individual by a physician, a physician assistant, an advanced practice nurse, a dentist, a podiatrist, or a certified optometrist, including medication to be taken on a PRN basis and over-the-counter medication. *"Oral" includes inhalants and medications administered through enteral tubes, utilizing aseptic technique. "Topical" includes eye, ear and nasal medications,* patches, as well as creams for male and female genitalia. [20 ILCS 1705/15.4(b)]

"Medication error" − The administration of medication other than as prescribed,

resulting in the wrong medication being given; or medication being given at the wrong time, in the wrong dosage, via the wrong route, or by the wrong person; or medication omitted entirely. It is meant to include a lack of documentation of medication administration or any error in that documentation. Medication errors must be documented and are subject to review by DHS or DPH, whichever is applicable. Medication errors that meet the reporting criteria in DHS' rules on Office of Inspector General Investigations of Alleged Abuse or Neglect or Deaths in State-Operated and Community Agency Facilities (59 Ill. Adm. Code 50) shall be reported to the Office of Inspector General.

"Medication administration record" or "MAR" − A written record of medications prescribed for, and administered to, an individual.

"Non-licensed staff training program" − *A standardized* competency-based *medication administration training program approved by DHS.* It is *conducted by a Nurse-Trainer for the purpose of training persons employed or under contract to provide direct care or treatment to individuals receiving services to administer medications and* implement *self-administration of medication training to individuals under the supervision* and monitoring *of* the *Nurse-Trainer. It incorporates adult learning styles, teaching strategies, classroom management, curriculum overview, including ethical-legal aspects, and standardized competency-based evaluations on administration of medications and self-administration of medication training programs*. [20 ILCS 1705/15.4(b)]

"Normalization" − A philosophy under which persons with a developmental disability are provided or restored to patterns and conditions of everyday life that are as close as possible to norms and patterns of the mainstream of society.

"Nurse-Trainer" − A registered professional nurse and/or advanced practice nurse who has successfully completed the DHS Nurse-Trainer Training Program.

"Nurse-Trainer Training Program" − A standardized competency-based medication administration program provided by DHS and conducted by a DHS Master-Nurse Trainer. Nurse-Trainers shall train persons employed or under contract to administer medication to individuals and *provide self-administration of medication training to individuals under the supervision and monitoring of the Nurse-Trainer. It incorporates adult learning styles, teaching strategies, classroom management and a curriculum overview, including the ethical and legal aspects of supervising those administering medication.* [20 ILCS

1705/15.4(b)]

"Patent or proprietary medications" − Medications and household remedies that are generally considered and accepted as harmless and nonpoisonous when used according to the directions on the label and for which there are written physician orders for their use.

"Physician" − A physician licensed to practice medicine in all of its branches.

"PRN" − Prescribed medications, to be taken as needed, for specific conditions.

"Registered professional nurse" − A person licensed as a registered professional nurse as defined in the Illinois Nurse Practice Act [225 ILCS 65/50-10].

"Self-administration" − An act in which *an individual administers his or her own medications. To be considered "capable of self-administering medications", individual residents must, at a minimum, be able to identify* prescribed *medication by size, shape, or color and know when it should be taken and in what amount it should be taken each time.* [20 ILCS 1705/15.4(b)]

"Substantial compliance" − Meeting the requirements set forth in this Part, except for variations from the strict and literal performance of those requirements that result in insignificant omissions and defects, given the particular circumstances and the history of those omissions and defects. Omissions that have an adverse impact on an individual's health and safety shall be considered significant and shall be considered substantial noncompliance.

"Supervision" − An active process in which the registered professional nurse monitors, directs, guides, and evaluates the outcomes of an activity or task. The registered professional nurse maintains the accountability for the tasks and responsibilities, as subcomponents of total patient care, delegated to authorized direct care staff.

"Unencumbered license" − As defined in the Nurse Practice Act [225 ILCS 65/50-10], a license in good standing issued by the Illinois Department of Financial and Professional Regulation.

(Source: Amended at 42 Ill. Reg. 20083, effective October 23, 2018)

DEPARTMENT OF INSURANCE

NOTICE OF ADOPTED REPEALER

1) Heading of the Part: Illinois Insurance Exchange Annual Statement

2) Code Citation: 50 Ill. Adm. Code 551

3)

Section Numbers:	Adopted Actions:
551.10	Repealed
551.20	Repealed
551.30	Repealed
551.40	Repealed
551.50	Repealed
551.60	Repealed

4) Statutory Authority: Implementing Sections 107.12, 107.13, 107.20 and 107.21 and authorized by Section 401(a) of the Illinois Insurance Code (Ill. Rev. Stat. 1981, ch. 73, pars. 719.12, 719.13, 719.20, 719.21 and 1013).

5) Effective Date of Repealer: October 29, 2018

6) Does this rulemaking contain an automatic repeal date? No

7) Does this rulemaking contain incorporations by reference? No

8) A copy of the adopted repealer, including any material incorporated by reference, is on file in the principal office of the Department of Insurance and is available for public inspection.

9) Notice of Proposal published in the *Illinois Register*: 42 Ill. Reg. 12376; July 6, 2018

10) Has JCAR issued a Statement of Objection to this rulemaking? No

11) Differences between Proposal and Final Version: None

12) Have all changes agreed upon by the Agency and JCAR been made as indicated in the agreements issued by JCAR? There were none.

13) Will this rulemaking replace an emergency rule currently in effect? No

14) Are there any rulemakings pending on this Part? No

DEPARTMENT OF INSURANCE

NOTICE OF ADOPTED REPEALER

15) Summary and Purpose of Rulemaking: The statute implemented by the rule was repealed. Therefore, the rule was also repealed.

16) Information and questions regarding this adopted repealer shall be directed to:

Marcy Savage, Assistant Deputy Director
Corporate Regulation Section
Department of Insurance
320 West Washington Street
Springfield IL 62767-0001

217/524-0016

DEPARTMENT OF INSURANCE

NOTICE OF ADOPTED AMENDMENTS

1) Heading of the Part: License and Documents Necessary to Engage in Activities and Examinations

2) Code Citation: 50 Ill. Adm. Code 752

3)

Section Numbers:	Adopted Actions:
752.10	Amendment
752.20	Repealed
752.30	Amendment

4) Statutory Authority: Implementing Article VIIA and authorized by Section 401 of the Illinois Insurance Code [215 ILCS 5/Art. VIIA (and 401)].

5) Effective Date of Rules: October 29, 2018

6) Does this rulemaking contain an automatic repeal date? No

7) Does this rulemaking contain incorporations by reference? No

8) A copy of the adopted rules, including any material incorporated by reference, is on file in the principal office of the Department of Insurance and is available for public inspection.

9) Notice of Proposal published in *Illinois Register*: 42 Ill. Reg. 12382; July 6, 2018

10) Has JCAR issued a Statement of Objection to this Rulemaking? No

11) Differences between Proposal and Final Version: 752.10(a), first line, deleted "as"; 752.10(d), deleted "st each year"; and several nonsubstantive changes made at JCAR's request.

12) Have all changes agreed upon by the Agency and JCAR been made as indicated in the agreements issued by JCAR? There were none.

13) Will this rulemaking replace an emergency rule currently in effect? No

14) Are there any rulemakings pending on this Part? No

DEPARTMENT OF INSURANCE

NOTICE OF ADOPTED AMENDMENTS

15) Summary and Purpose of Rulemaking: Previously, the Department's Property and Casualty Compliance Unit was responsible for the annual licensure of advisory organizations and joint underwriting associations. However, it was decided this function would more appropriately fit within the duties conducted by the Corporate Regulatory Section. To that end, the duties have been transferred within these Departmental units, and the amendments reflect this work assignment change. Additionally, several portions of the rule that are no longer necessary have been removed.

16) Information and questions regarding these adopted rules shall be directed to:

Marcy Savage, Assistant Deputy Director
Corporate Regulation Section
Department of Insurance
320 West Washington Street
Springfield IL 62767-0001

217/524-0016

The full text of the Adopted Amendments begins on the next page:

DEPARTMENT OF INSURANCE

NOTICE OF ADOPTED AMENDMENTS

TITLE 50: INSURANCE
CHAPTER I: DEPARTMENT OF INSURANCE
SUBCHAPTER i: ADVISORY ORGANIZATIONS AND INSURANCE COMPANIES

PART 752
LICENSE AND DOCUMENTS NECESSARY TO ENGAGE IN
ACTIVITIES AND EXAMINATIONS

Section

752.10 License
752.20 Documents − Joint Underwriting and Joint Reinsurance (Repealed)
752.30 Submission of Application
752.40 Examinations

AUTHORITY: Implementing Article VIIA and authorized by Section 401 of the Illinois Insurance Code [215 ILCS 5/Art. VIIA and 401].

SOURCE: Filed September 9, 1975, effective September 30, 1975; codified at 6 Ill. Reg. 12454; amended at 38 Ill. Reg. 19939, effective September 30, 2014; amended at 42 Ill. Reg. 20093, effective October 29, 2018.

Section 752.10 License

a) All advisory organizations conducting activities ~~as~~ defined in Article VIIA and in the regulations issued to effect Article VIIA must apply to and be licensed by the Department of Insurance.

~~b) Licenses issued to advisory organizations by the State of Illinois prior to October 1, 1972 became null and void on January 1, 1973.~~

b~~c~~) Every application for a license must include:

1) Copies certified by the custodian of the originals of the following:

A) Constitution;

B) The Articles of Incorporation;

C) Articles of Agreement;

D) Articles of Associations; and

E) The by-laws, plan of operations, rules or regulations that govern eligibility for membership and the activities of members relative to their membership.

2) A list of members and subscribers.

3) The name and address of a resident of the State~~state~~ upon whom Notices or Orders of the Director or process may be served.

4) A list of the officers and principal managers.

5) A $50 fee payable to the Illinois Director of Insurance.

c~~d~~) Notification of substantive changes in subsections (b~~e~~)(1), (3) and (4) must be made within 60 days after the change. The list of members and subscribers should be submitted annually, but additions to or deletions from the list should be submitted monthly.

d~~e~~) Licenses must be renewed annually prior to January 1~~st each year~~, but application for renewal need include only an update of existing documents and information previously submitted to the Department.

(Source: Amended at 42 Ill. Reg. 20093, effective October 29, 2018)

Section 752.20 Documents-Joint Underwriting and Joint Reinsurance (Repealed)

~~a) All groups, associations or organizations of admitted companies which engage in joint underwriting or joint reinsurance through a formal group, association, or organization must file necessary documents prior to January 1, 1973.~~

~~b) Necessary documents of these entities in a) above must include:~~

~~1) Copies certified by the custodian of the originals of the following:~~

~~A) its Articles of Incorporation, Agreement or Association;~~

~~B)~~ ~~its Constitution;~~

~~C)~~ ~~by-laws, rules or regulations governing its activities.~~

~~2)~~ ~~Its list of members.~~

~~3)~~ ~~The name and address of its resident agent for service of process.~~

~~c)~~ ~~Joint underwriting or joint reinsurance arrangements or transactions by two or more admitted companies which do not constitute formal group, association, or organization arrangements or transactions do not require filing under this Article of the Insurance Code.~~

~~d)~~ ~~Notification of substantive changes in those documents required in b) above must be made within 60 days of the change.~~

(Source: Repealed at 42 Ill. Reg. 20093, effective October 29, 2018)

Section 752.30 Submission of Application

All applications, information documents and fees required under Section~~Sections~~ 752.10 ~~and 752.20~~ must be received by:

Illinois Department of Insurance
Corporate Regulatory Section~~Property & Casualty Compliance Unit~~
320 West Washington St.
Springfield, Illinois 62767

(Source: Amended at 42 Ill. Reg. 20093, effective October 29, 2018)

DEPARTMENT OF INSURANCE

NOTICE OF ADOPTED REPEALER

1) Heading of the Part: Uniform Accounting Instructions for Fire and Marine and Casualty and Surety Insurers

2) Code Citation: 50 Ill. Adm. Code 903

3)

Section Numbers:	Adopted Actions:
903.5	Repealed
903.10	Repealed
903.20	Repealed
903.30	Repealed
903.40	Repealed
903.50	Repealed
903.60	Repealed
903.70	Repealed
903.80	Repealed
903.90	Repealed
903.100	Repealed
903.110	Repealed
903.120	Repealed
903.130	Repealed
903.140	Repealed
903.150	Repealed
903.160	Repealed
903.170	Repealed
903.180	Repealed
903.190	Repealed
903.200	Repealed
903.210	Repealed
903.220	Repealed
903.310	Repealed
903.410	Repealed
903.420	Repealed
903.430	Repealed
903.510	Repealed
903.520	Repealed
903.610	Repealed
903.620	Repealed
903.630	Repealed

DEPARTMENT OF INSURANCE

NOTICE OF ADOPTED REPEALER

4) Statutory Authority: Implementing Section 133 and authorized by Section 401 of the Illinois Insurance Code (Ill. Rev. Stat. 1981, ch. 73, pars. 745 and 1013) [215 ILCS 5/133 and 401].

5) Effective Date of Repealer: October 29, 2018

6) Does this rulemaking contain an automatic repeal date? No

7) Does this rulemaking contain incorporations by reference? No

8) A copy of the adopted repealer, including any material incorporated by reference, is on file in the principal office of the Department of Insurance and is available for public inspection.

9) Notice of Proposal published in the *Illinois Register*: 42 Ill. Reg. 12387; July 6, 2018

10) Has JCAR issued a Statement of Objection to this rulemaking? No

11) Differences between Proposal and Final Version: None

12) Have all changes agreed upon by the Agency and JCAR been made as indicated in the agreements issued by JCAR? There were none.

13) Will this rulemaking replace an emergency rule currently in effect? No

14) Are there any rulemakings pending on this Part? No

15) Summary and Purpose of Rulemaking: Part 903 was effective in 1958 and defined expenses of fire and marine and casualty and surety insurers for uniformity. The annual statement instructions and the NAIC Accounting Practices and Procedures Manual now provides direction and explanations for these expenses. This is an unnecessary Part and has been repealed in its entirety.

Part 903 was identified for repeal as redundant and unnecessary during the Department of Insurance's extensive review of its regulations under Governor Rauner's "Cutting the Red Tape Initiative" to ensure that our administrative rules are up to date and reflect current Department practices and functions; use plain language where appropriate; do not cause undue administrative delay or backlog; are not unduly burdensome to businesses; and are statutorily authorized.

DEPARTMENT OF INSURANCE

NOTICE OF ADOPTED REPEALER

16) Information and questions regarding this adopted repealer shall be directed to:

Kevin Fry, Deputy Director
Financial/Corporate Regulatory Division
Department of Insurance
320 West Washington Street
Springfield IL 62767-0001

217/782-1756

DEPARTMENT OF INSURANCE

NOTICE OF ADOPTED AMENDMENT

1) Heading of the Part: Internal Security Standard and Fidelity Bonds

2) Code Citation: 50 Ill. Adm. Code 904

3) Section Number: 904.50 Adopted Action: Amendment

4) Statutory Authority: Implementing and authorized by Section 401 of the Illinois Insurance Code [215 ILCS 5/401].

5) Effective Date of Rule: October 29, 2018

6) Does this rulemaking contain an automatic repeal date? No

7) Does this rulemaking contain incorporations by reference? Yes, incorporated standards from National Association of Insurance Commissioners (NAIC) Financial Condition Examiners Handbook 2018 Edition (1100 Walnut St, Ste 1500, Kansas City MO 64016-2277) (no later editions or amendments) at Exhibit R, entitled "Suggested Minimum Amounts of Fidelity Insurance".

8) A copy of the adopted rulemaking, including any material incorporated by reference, is on file in the principal office of the Department of Insurance and is available for public inspection.

9) Notice of Proposal published in *Illinois Register*: 42 Ill. Reg. 53; January 5, 2018

10) Has JCAR issued a Statement of Objection to this Rulemaking? No

11) Differences between Proposal and Final Version: In Section 904.50(a), starting in the second line, changed "outlined in this Part and in accordance with guidance provided by the National Association of Insurance Commissioners (NAIC) Financial Condition Examiners' Handbook." to "outlined in this Part and in accordance with an amount not less than the minimum amount shown as guidance provided in the National Association of Insurance Commissioners (NAIC) Financial Condition Examiners Handbook 2018 Edition (1100 Walnut St, Ste 1500, Kansas City MO 64016-2277) (no later editions or amendments) at Exhibit R, entitled "Suggested Minimum Amounts of Fidelity Insurance"." in response to a combination of JCAR's request and State Farm Mutual Automobile Insurance Company's public comment.

DEPARTMENT OF INSURANCE

NOTICE OF ADOPTED AMENDMENT

12) Have all changes agreed upon by the Agency and JCAR been made as indicated in the agreements issued by JCAR? Yes

13) Will this rulemaking replace an emergency rule currently in effect? No

14) Are there any rulemakings pending on this Part? Yes

Section Numbers:	Proposed Actions:	*Illinois Register* Citations:
904.5	Amendment	42 Ill. Reg. 17329; October 5, 2018
904.7	New Section	42 Ill. Reg. 17329; October 5, 2018
904.10	Amendment	42 Ill. Reg. 17329; October 5, 2018
904.20	Amendment	42 Ill. Reg. 17329; October 5, 2018

15) Summary and Purpose of Rulemaking: The changes have been made to adjust to the evolution of fidelity and surety bonds being written on a claims-made basis rather than an occurrence basis. Also, the amounts of coverage have been transitioned to follow the NAIC examination guidelines.

The main issue had been that the rule required a one-year discovery period which was a common element when these bonds were written on an occurrence basis. Previously and for a number of years now these bonds had been written on a "discovery" or claims-made basis which rendered the "discovery period" language moot. With the change to a "discovery" basis any claim which comes in while the bond is in effect will be covered by the surety bond.

The changes to the deductibles and amounts of coverage have been repealed so that the NAIC examination guidance can be used instead. The self-insurance provisions have been repealed as it is the DOI's observation that most companies are obtaining these bonds from other companies and we believe best practice for risk management would be to place this risk with another insurance company.

16) Information and questions regarding this adopted rule shall be directed to:

Jeff Jackson
Financial Regulation Section
Department of Insurance
320 West Washington Street
Springfield IL 62767-0001
217/524-7999

DEPARTMENT OF INSURANCE

NOTICE OF ADOPTED AMENDMENT

The full text of the Adopted Amendment begins on the next page:

DEPARTMENT OF INSURANCE

NOTICE OF ADOPTED AMENDMENT

TITLE 50: INSURANCE
CHAPTER I: DEPARTMENT OF INSURANCE
SUBCHAPTER l: PROVISIONS APPLICABLE TO ALL COMPANIES

PART 904
INTERNAL SECURITY STANDARD AND FIDELITY BONDS

Section
904.5 Authority and Purpose
904.10 Registration of Securities
904.20 Custody, Care and Disposition of Securities
904.30 Signature of Checks – Facsimile Signatures
904.40 Bank Balance Verification
904.50 Bond Requirements

AUTHORITY: Implementing and authorized by Section 401 of the Illinois Insurance Code [215 ILCS 5/401].

SOURCE: Filed October 15, 1971; amended at 2 Ill. Reg. 29, p. 161, effective July 17, 1978; codified at 6 Ill. Reg. 12461; amended at 16 Ill. Reg. 12561, effective July 27, 1992; amended at 17 Ill. Reg. 15584, effective September 14, 1993; amended at 30 Ill. Reg. 337, effective December 29, 2005; amended at 36 Ill. Reg. 18670, effective December 17, 2012; amended at 42 Ill. Reg. 20101, effective October 29, 2018.

Section 904.50 Bond Requirements

a) All companies shall procure and maintain in force surety bonds on employees, officers or positions outlined in this Part and in accordance with an amount not less than the minimum amount shown as guidance provided in the National Association of Insurance Commissioners (NAIC) Financial Condition Examiners Handbook 2018 Edition (1100 Walnut St., Ste. 1500, Kansas City MO 64016-2277) at Exhibit R, entitled "Suggested Minimum Amounts of Fidelity Insurance" (no later editions or amendments).~~in an amount not less than the amount set forth in the column in subsection (d) headed "Minimum Amount of Bond", based on the amount of admitted assets of the company (as determined from year to year) stated in the annual statement of the company as filed with the Department.~~ All surety bonds shall be written on a form that provides coverage on a discovery basis. All such bonds~~with at least a one year discovery period or, if written with less than a 3 year discovery period,~~ shall contain a provision that no cancellation

or termination of the bond, whether by or at the request of the insured or by the underwriter, shall take effect prior to the expiration of 90 days after written notice of cancellation or termination has been filed with the Department unless an earlier date of cancellation or termination is approved by the Department.

b) Surety bonds required by this Section shall include all employees, officers or positions for the following perils, which may be covered under separate policies:

1) Dishonesty of employees and officers;

2) Robbery, burglary, larceny, theft, false pretense, holdup, misplacement, mysterious disappearance, and damage or destruction while property is in any bank or any recognized place of safe deposit, or in transit; and

3) Forgery or alteration.

~~c) Deductible~~

~~1) A surety bond may be written under a deductible form, the amount of the deductible to be not more than the greater of:~~

~~A) .5% of the capital and surplus, if a stock company, and, if a company other than stock, its surplus over all liabilities (as determined from year to year) stated in the annual statement of the company filed with the Department; or~~

~~B) 10% of the total bond requirement provided in subsection (a).~~

~~2) Provided, however, the deductible amount shall not in any case exceed $500,000.~~

~~d) If the total bond requirement of a company under subsection (a) is in excess of $100,000, the excess may be written on an excess of loss basis to cover only the peril of dishonesty and may be limited to cover the following officers or employees:~~

~~1) All officers and employees authorized by the Board of Directors to act under the terms and provisions of Section 904.20 of this Part;~~

~~TOTAL ADMITTED ASSETS~~		~~MINIMUM AMOUNT OF BOND~~			
~~Under $100,000~~		~~$2,000 plus 8% of total assets~~			
~~MORE THAN~~	~~BUT NOT MORE THAN~~				
~~$ 100,000~~	~~$ 600,000~~	~~$ 10,000~~	~~plus~~	~~4% of assets over~~	~~$ 100,000~~
~~600,000~~	~~1,200,000~~	~~30,000~~	~~plus~~	~~3⅓% of assets over~~	~~600,000~~
~~1,200,000~~	~~3,200,000~~	~~50,000~~	~~plus~~	~~2½% of assets over~~	~~1,200,000~~
~~3,200,000~~	~~4,450,000~~	~~100,000~~	~~plus~~	~~2% of assets over~~	~~3,200,000~~
~~4,450,000~~	~~6,450,000~~	~~125,000~~	~~plus~~	~~1¼% of assets over~~	~~4,450,000~~
~~6,450,000~~	~~90,450,000~~	~~150,000~~	~~plus~~	~~⅝% of assets over~~	~~6,450,000~~
~~90,450,000~~	~~350,450,000~~	~~675,000~~	~~plus~~	~~⅜% of assets over~~	~~90,450,000~~
~~350,450,000~~	~~1,070,450,000~~	~~1,625,000~~	~~plus~~	~~$^{3}/_{16}$% of assets over~~	~~350,450,000~~
~~1,070,450,000~~	~~———~~	~~3,075,000~~	~~plus~~	~~$^{3}/_{32}$% of assets over~~	~~1,070,450,000~~
				~~until total bond equals $5,000,000.~~	

~~2)~~ ~~Officers and employees authorized by the Board of Directors to act under the terms of Section 904.30, except that one or more of the employees of this category may be excluded by action of the Board of Directors;~~

~~3)~~ ~~Other officers or employees as may be included in the resolution of the Board of Directors authorizing the procurement of coverage on the excess of loss basis.~~

~~e)~~ ~~Surety bonds covering affiliated and/or subsidiary companies substantially under the same management and control may be written to cover the affiliated and/or subsidiary companies jointly. The total admitted assets of the affiliated and/or subsidiary company having the largest total admitted assets shall be used in calculating the amount of surety cover required under subsection (a).~~

c~~f~~) Surety bonds for any company shall not be procured by the company from affiliated and/or subsidiary companies substantially under the same management and control as the company being bonded.

~~g)~~ ~~Notwithstanding any other provision of this Section, a company may elect to self insure the required surety bond if:~~

~~1) the company has, and maintains at all times while self insured, net admitted assets, in excess of all reserves and other liabilities, of more than $25,000,000;~~

~~2) the self insurance does not cover any officer or director of the company;~~

~~3) the total number of employees covered under the self insurance is not more than 1% of the employees of the company, exclusive of all officers and directors; and~~

~~4) the self insurance is evidenced by a "Certificate of Self Insurance" in an appropriate form, specifically setting forth the liabilities and responsibilities of the company in accordance with this Section and including an addendum setting forth, by name or position, each employee covered, at any time, under the self insurance.~~

(Source: Amended at 42 Ill. Reg. 20101, effective October 29, 2018)

DEPARTMENT OF INSURANCE

NOTICE OF ADOPTED AMENDMENTS

1) Heading of the Part: Mid-Term Cancellations

2) Code Citation: 50 Ill. Adm. Code 940

3)

Section Numbers:	Adopted Actions:
940.10	Amendment
940.20	Amendment
940.30	Amendment

4) Statutory Authority: Implementing Section 143.16a of the Illinois Insurance Code [215 ILCS 5/143.16a] and authorized by Section 401 of the Illinois Insurance Code [215 ILCS 5/401].

5) Effective Date of Rules: October 29, 2018

6) Does this rulemaking contain an automatic repeal date? No

7) Does this rulemaking contain incorporations by reference? No

8) A copy of the adopted rules, including any material incorporated by reference, is on file in the principal office of the Department of Insurance and is available for public inspection.

9) Notice of Proposal published in the *Illinois Register*: 42 Ill. Reg. 12449; July 6, 2018

10) Has JCAR issued a Statement of Objection to this rulemaking? No

11) Differences between Proposal and Final Version: Several nonsubstantive changes were made at JCAR's request.

12) Have all changes agreed upon by the Agency and JCAR been made as indicated in the agreements issued by JCAR? None were made.

13) Will this rulemaking replace an emergency rule currently in effect? No

14) Are there any rulemakings pending on this Part? No

15) Summary and Purpose of Rulemaking: The amendments remove a requirement to file any amendments purporting to omit reinsurance coverage. This requirement is redundant

because those amendments would already be included in the reinsurance contract that is required to be filed. This particular requirement was identified for removal during the Department's review of its regulations pursuant to the "Cutting the Red Tape Initiative" under Executive Order 2016-13. The amendments also add a definition for "Code" as "Illinois Insurance Code" to simplify language, and they include grammatical and technical corrections and clarifications.

16) Information and questions regarding this adopted rulemaking shall be directed to:

Robert Rapp, Assistant Deputy Director
Property and Casualty Complaints
Department of Insurance
320 West Washington Street
Springfield IL 62767-0001

217/785-1680

The full text of the Adopted Amendments begins on the next page:

DEPARTMENT OF INSURANCE

NOTICE OF ADOPTED AMENDMENTS

TITLE 50: INSURANCE
CHAPTER I: DEPARTMENT OF INSURANCE
SUBCHAPTER l: PROVISIONS APPLICABLE TO ALL COMPANIES

PART 940
MID-TERM CANCELLATIONS

Section
940.10 Purpose
940.20 Definitions
940.30 Certification

AUTHORITY: Implementing Section 143.16a of the Illinois Insurance Code [215 ILCS 5/143.16a] and authorized by Section 401 of the Illinois Insurance Code [215 ILCS 5/401].

SOURCE: Emergency rules adopted at 10 Ill. Reg. 3680, effective January 30, 1986, for a maximum of 150 days; adopted at 11 Ill. Reg. 3113, effective February 3, 1987; amended at 12 Ill. Reg. 19699, effective November 14, 1988; amended at 42 Ill. Reg. 20108, effective October 29, 2018.

Section 940.10 Purpose

This Part is issued pursuant to Section 401 of the ~~Illinois Insurance~~ Code ~~(Ill. Rev. Stat. 1985, ch. 73, par. 1013)~~ in order to implement Section 143.16a(e) of~~by~~ the ~~Illinois Insurance~~ Code ~~(Ill. Rev. Stat. 1985, ch. 73, par. 755.16a(e)~~ by establishing standards and procedures for the filing and acceptance of certifications of the loss of reinsurance by the Illinois Director of Insurance.

(Source: Amended at 42 Ill. Reg. 20108, effective October 29, 2018)

Section 940.20 Definitions

"Code" means the Illinois Insurance Code [215 ILCS 5].

~~a)~~"Department" means~~shall mean~~ the Illinois Department of Insurance.

~~b)~~"Director" means~~shall mean~~ the Illinois Director of Insurance.

(Source: Amended at 42 Ill. Reg. 20108, effective October 29, 2018)

Section 940.30 Certification

a) No notice of cancellation may be issued by any insurer under authority of Section 143.16a(e) of the ~~Illinois Insurance~~ Code unless the insurer has filed the certification and documents described by this Section~~section~~ and received notification of its acceptance from the Director.

b) Certification of the loss of reinsurance under Section 143.16a(e) of the ~~Illinois Insurance~~ Code shall consist of a written statement signed by a principal officer of the company identifying the specific lines of insurance affected by the loss of reinsurance, giving an estimate of the number of Illinois policies to be cancelled, describing the reason for the loss of reinsurance, describing all efforts to renew and/or replace the reinsurance lost, and affirming that the insurer will cancel only those policies that~~which~~ were covered by the lost reinsurance.

c) Every certification filed under this Part must be accompanied by the following documents:

1) a copy of the reinsurance contract that~~which~~ had provided coverage for the policies to be cancelled;

2) a copy of any notice of cancellation of reinsurance issued by the reinsurer and effecting the policies to be cancelled; and

~~3) a copy of any amendment purporting to omit reinsurance coverage for the policies to be cancelled; and~~

3~~4~~) a copy of any new reinsurance contract replacing the lost reinsurance and purporting to omit reinsurance coverage for the policies to be cancelled.

d) The Director shall give written notice of his or her acceptance of a certification within 30 days after~~of~~ its receipt by the Department, unless:

1) the filing does not comply with the requirements of this Part;

2) the filing is insufficient to demonstrate that the loss of reinsurance was involuntary on the part of the insurer making the filing;

3) the certification appears to be untrue; or

4) the reinsurance lost does not cover a substantial part of the underlying risk. In determining whether or not the reinsurance covers a substantial part of the underlying risk, the Director shall consider:

A) the risk of loss to the insurer in providing coverage to the underlying risk without reinsurance, as compared to the such risk of loss to the insurer assuming the reinsurance of the underlying risk continues;

B) whether or not the reinsurance terminated actually provided for a transfer of risk from the insurer to the reinsurer; and

C) whether or not the termination of the reinsurance contract resulted in, or will result in a decrease in the insurer's statutory capital and surplus as described in Section 174.1 of the Code(Ill. Rev. Stat. 1987, ch. 73, par. 786.1).

e) Whenever the Director refuses to accept a certification, he or she shall give written notice stating the reason for thesuch refusal within 30 days after of the receipt of the certification by the Department.

f) The Director's written notice of refusal shall be issued under, and governed by, Sectionthe provisions of Sections 401.1 or 403A of the Illinois Insurance Code (Ill. Rev. Stat. 1987, ch. 73, pars. 1013.1 or 1015A) and the insurer shall be entitled to all rights of hearing provided for in the Code therein and in accordance with 50 Ill. Adm.Illinois Administrative Code 2402.

(Source: Amended at 42 Ill. Reg. 20108, effective October 29, 2018)

DEPARTMENT OF INSURANCE

NOTICE OF ADOPTED REPEALER

1) Heading of the Part: Admitted Assets

2) Code Citation: 50 Ill. Adm. Code 945

3)

Section Numbers:	Adopted Actions:
945.10	Repealed
945.20	Repealed
945.30	Repealed
945.40	Repealed
945.50	Repealed

4) Statutory Authority: Implementing Section 136 and authorized by Section 401 of the Illinois Insurance Code [215 ILCS 5/136 and 401] and implementing Section 2-7 of the Health Maintenance Organization Act [215 ILCS 125/2-7] (see PA 91-549, effective August 14, 1999).

5) Effective Date of Repealer: October 29, 2018

6) Does this rulemaking contain an automatic repeal date? No

7) Does this rulemaking contain incorporations by reference? No

8) A copy of the adopted repealer, including any material incorporated by reference, is on file in the principal office of the Department of Insurance and is available for public inspection.

9) Notice of Proposal published in the *Illinois Register*: 42 Ill. Reg. 12454; July 6, 2018

10) Has JCAR issued a Statement of Objection to this rulemaking? No

11) Differences between Proposal and Final Version: None

12) Have all changes agreed upon by the Agency and JCAR been made as indicated in the agreements issued by JCAR? There were none.

13) Will this rulemaking replace an emergency rule currently in effect? No

14) Are there any rulemakings pending on this Part? No

DEPARTMENT OF INSURANCE

NOTICE OF ADOPTED REPEALER

15) Summary and Purpose of Rulemaking: This rule was a stop gap measure for defining "admitted assets" in 2000 until the NAIC Accounting Practices and Procedures were adopted in 2001. The rule is no longer needed and has been repealed. Additionally, Section 2-7 of the Health Maintenance Organization Act [215 ILCS 125/2-7] was repealed by PA 97-486, Sec. 30, effective January 1, 2012.

16) Information and questions regarding this adopted repealer shall be directed to:

Kevin Fry, Deputy Director
Financial/Corporate Regulatory Division
Department of Insurance
320 West Washington Street
Springfield IL 62767-0001

217/782-1756

ILLINOIS RACING BOARD

NOTICE OF ADOPTED AMENDMENTS

1) Heading of the Part: Approval of Racing Officials

2) Code Citation: 11 Ill. Adm. Code 422

3)

Section Numbers:	Adopted Actions:
422.10	Amendment
422.20	Repealed
422.30	Repealed
422.40	Repealed
422.100	Repealed

4) Statutory Authority: 230 ILCS 5/9(b)

5) Effective Date of Rules: November 1, 2018

6) Does this rulemaking contain an automatic repeal date? No

7) Does this rulemaking contain incorporations by reference? No

8) A copy of the adopted rules, including any material incorporated by reference, is on file in the Agency's central office and is available for public inspection.

9) Notice of Proposal published in the *Illinois Register*: 42 Ill. Reg. 14109, July 20, 2018

10) Has JCAR issued a Statement of Objection to this rulemaking? No

11) Differences between Proposal and Final Version: No changes were made

12) Have all the changes agreed upon by the Agency and JCAR been made as indicated in the letter issued by JCAR? No changes were requested by JCAR.

13) Will this rulemaking replace an emergency rule currently in effect? No

14) Are there any rulemakings pending on this Part? No

15) Summary and Purpose of Rulemaking: Pursuant to Executive Order 2016-13, the IRB is amending and repealing sections under the "Cutting the Red Tape Initiative" to make certain that regulatory standards are not unduly burdensome to licensees.

ILLINOIS RACING BOARD

NOTICE OF ADOPTED AMENDMENTS

16) Information and questions regarding these adopted rules shall be directed to:

Mickey Ezzo
Illinois Racing Board
100 West Randolph, Suite 5-700
Chicago IL 60601

312/814-5017
Mickey.ezzo@illinois.gov

The full text of the Adopted Amendments begins on the next page:

ILLINOIS RACING BOARD

NOTICE OF ADOPTED AMENDMENTS

TITLE 11: ALCOHOL, HORSE RACING, LOTTERY, AND VIDEO GAMING
SUBTITLE B: HORSE RACING
CHAPTER I: ILLINOIS RACING BOARD
SUBCHAPTER b: RULES APPLICABLE TO ORGANIZATION LICENSEES

PART 422
APPROVAL OF RACING OFFICIALS

Section

422.10 Racing Officials
422.20 Approval of New Officials (Repealed)
422.30 Standards for Approval and Disapproval of Officials (Repealed)
422.40 Recommendation of Board (Repealed)
422.50 Suspension and Removal of Officials
422.60 Conflict of Interest Provisions
422.70 Emergency Approval
422.80 Physical Examination
422.90 Officials Approved by the Stewards
422.100 Occupation License (Repealed)
422.110 Penalties

AUTHORITY: Authorized by Section 9(b) of the Illinois Horse Racing Act of 1975 [230 ILCS 5].

SOURCE: Adopted at 5 Ill. Reg. 10341, effective September 25, 1981; codified at 5 Ill. Reg. 10905; amended at 10 Ill. Reg. 10141, effective May 27, 1986; amended at 13 Ill. Reg. 1558, effective January 23, 1989; amended at 16 Ill. Reg. 13069, effective August 10, 1992; amended at 35 Ill. Reg. 8481, effective May 23, 2011; amended at 42 Ill. Reg. 20115, effective November 1, 2018.

Section 422.10 Racing Officials

a) Each organization licensee shall submit to the Board for its approval or disapproval the names of all persons whom the licensee has selected as racing officials or employees whose duties relate to the actual running of the races. The list shall include, when applicable, the following thoroughbred and harness racing officials:

Association Steward Marshal or Outrider

~~Presiding Judge~~	Timer
~~Associate Judge~~	Clerk of the Scales
Racing Secretary	Clerk of Course
Assistant Racing Secretary	Track Veterinarian
Patrol Judges	Track Superintendent
Placing Judges	Mutuel Manager
Paddock Judges	Program Director
~~Breathalyzer Operator~~	Director of Security
Starter	General Manager

b) The list of names shall be submitted to the Board in writing at least 20 days prior to the opening of any race meeting and the list shall indicate whether the nominee has previously been employed at any Illinois race track. No racing official shall participate in a race meeting without an occupation license.

c) The organization licensee shall file a completed application and resume for each nominee who was not previously approved by the Board as a racing official.

d) The Board's approval or disapproval of the racing officials selected by the organization licensee shall be based on the standards and guidelines set forth in Section 15(c) and (d) of the Act for denial, suspension and revocation of an occupation license.

e) The Board shall act on the organization licensee's list of officials at a meeting of the Board. If Board staff recommends disapproval of an official, the organization licensee shall be notified of the recommendation in advance of the Board meeting.

(Source: Amended at 42 Ill. Reg. 20115, effective November 1, 2018)

Section 422.20 Approval of New Officials (Repealed)

~~a) The organization licensee shall file the following documents with respect to each nominee who was not previously approved by the Board as a racing official:~~

~~1) A complete application which must include the following information:~~

~~A) Date of birth,~~

~~B) Social security number,~~

~~C) Home address,~~

~~D) Home telephone number,~~

~~E) Names of previous employers,~~

~~F) Phone numbers and contact person for verification of prior employment, and~~

~~G) Educational background.~~

~~2) A signed statement ("Authorization for Release of Information Form") authorizing the release of information to the Illinois Department of Law Enforcement and the Board.~~

~~3) A completed FBI Fingerprint Card.~~

~~b) The documents shall be filed directly with the Board at least sixty days prior to the opening of the race meeting.~~

(Source: Repealed at 42 Ill. Reg. 20115, effective November 1, 2018)

Section 422.30 Standards for Approval and Disapproval of Officials (Repealed)

~~The Board's approval or disapproval of the racing officials selected by the organization licensee shall be based on the standards and guidelines set forth in Sections 37-15(c) and (d) of the Act for denial, suspension, and revocation of an occupation license. The Board shall also give particular consideration to the nominee's experience, if any, as a racing official and his/her qualifications for the position.~~

(Source: Repealed at 42 Ill. Reg. 20115, effective November 1, 2018)

Section 422.40 Recommendation of Board (Repealed)

~~The Board shall act on the organization licensee's list of officials at a meeting of the Board. If Board staff recommends disapproval of an official, the organization licensee shall be notified of the recommendation in advance of the Board meeting.~~

(Source: Repealed at 42 Ill. Reg. 20115, effective November 1, 2018)

Section 422.100 Occupation License (Repealed)

~~No person shall serve or act as a racing official unless such person has an occupation license.~~

(Source: Repealed at 42 Ill. Reg. 20115, effective November 1, 2018)

ILLINOIS RACING BOARD

NOTICE OF ADOPTED AMENDMENT

1) Heading of the Part: Licensing

2) Code Citation: 11 Ill. Adm. Code 502

3) Section Number: 502.500 Adopted Action: Amendment

4) Statutory Authority: 230 ILCS 5/9(b)

5) Effective Date of Rule: November 1, 2018

6) Does this rulemaking contain an automatic repeal date? No

7) Does this rulemaking contain incorporations by reference? No

8) A copy of the adopted amendments, including any material incorporated by reference, is on file in the Agency's central office and is available for public inspection.

9) Notice of Proposal published in the *Illinois Register*: 42 Ill. Reg. 14115, July 20, 2018

10) Has JCAR issued a Statement of Objection to this rulemaking? No

11) Differences between Proposal and Final Version: No changes were made.

12) Have all the changes agreed upon by the Agency and JCAR been made as indicated in the letter issued by JCAR? No changes were requested by JCAR

13) Will this rulemaking replace an emergency rule currently in effect? No

14) Are there any rulemakings pending on this Part? No

15) Summary and Purpose of Rulemaking: The Association of Racing Commissioners International (ARCI) model rule governing jockey agents states that "a jockey agent may serve as agent for no more than two jockeys and one apprentice jockey." Board rule 502.500 (Jockey Agents) currently allows a jockey agent to represent no more than two jockeys. This proposed rulemaking amends the current rule by expanding it from two jockeys to also including an apprentice jockey.

16) Information and questions regarding this adopted rule shall be directed to:

ILLINOIS RACING BOARD

NOTICE OF ADOPTED AMENDMENT

Mickey Ezzo
Illinois Racing Board
100 West Randolph, Suite 5-700
Chicago IL 60601

312/814-5017
Mickey.ezzo@illinois.gov

The full text of the Adopted Amendment begins on the next page:

ILLINOIS RACING BOARD

NOTICE OF ADOPTED AMENDMENT

TITLE 11: ALCOHOL, HORSE RACING, LOTTERY, AND VIDEO GAMING
SUBTITLE B: HORSE RACING
CHAPTER I: ILLINOIS RACING BOARD
SUBCHAPTER c: RULES APPLICABLE TO ALL OCCUPATION LICENSEES

PART 502
LICENSING

SUBPART A: PROCEDURE

Section
502.10 Submission of Application
502.20 Complete Application
502.30 License Fees
502.40 Duration and Extent of Occupation Licenses
502.50 Rulings and Hearings
502.55 Denial of License
502.58 License to Participate

SUBPART B: STATUTORY GROUNDS FOR DENIAL OF A LICENSE

Section
502.60 Denial of a License for Criminal Conviction
502.72 First-Time Applicant Who Has Been Convicted of a Crime
502.76 Prohibitions Against Persons on Conditional Discharge, Parole, Probation or Supervision
502.78 Probationary Nature of Licenses
502.80 Unqualified to Perform the Duties
502.90 Falsifying Answers or Omitting Facts
502.100 Reciprocity
502.102 Burden of Going Forward
502.104 Denial of a License for Just Cause in Illinois or in Another Racing Jurisdiction

SUBPART C: GENERAL CRITERIA

Section
502.110 Criteria for Determining Eligibility
502.115 Standards Required of All Applicants

ILLINOIS RACING BOARD

NOTICE OF ADOPTED AMENDMENT

SUBPART D: OWNERS

Section
502.120 Owners

SUBPART E: TRAINERS AND ASSISTANT TRAINERS

Section
502.200 Trainers and Assistant Trainers
502.210 Prospective Trainers or Assistant Trainers
502.220 Workers' Compensation

SUBPART F: JOCKEYS AND APPRENTICE JOCKEYS

Section
502.230 Jockeys and Apprentice Jockeys
502.235 Apprentice Jockeys, Criteria for Eligibility
502.238 Apprentice Contract or Certificate

SUBPART G: DRIVERS

Section
502.250 Harness Driver
502.260 Prospective Harness Drivers
502.270 "Q" Licenses
502.280 "P" Licenses
502.290 "A" Licenses

SUBPART H: OTHER LICENSEES

Section
502.300 Veterinarians
502.320 Veterinary Assistant
502.350 Farriers (Blacksmiths)
502.380 Exercise Riders
502.400 Pony Person
502.450 Stable Foreman
502.500 Jockey Agents
502.600 Authorized Agents

ILLINOIS RACING BOARD

NOTICE OF ADOPTED AMENDMENT

502.650 Tack Shop Operators and Other Vendors
502.660 Vendor Helper
502.680 Thoroughbred Grooms
502.690 Harness Grooms
502.700 Hotwalker
502.790 Totalizator Employee
502.795 Business Agents

SUBPART I: CONFLICTS OF INTEREST

Section
502.800 General Provisions
502.820 Dual Licensing
502.830 Limitations on License
502.840 Husbands and Wives
502.850 Transfer of a Horse

AUTHORITY: Authorized by Section 9(b) of the Illinois Horse Racing Act of 1975 [230 ILCS 5].

SOURCE: Emergency rule adopted and codified at 6 Ill. Reg. 9711, effective July 27, 1982, for a maximum of 150 days; adopted and codified at 6 Ill. Reg. 13786, effective October 25, 1982; amended at 7 Ill. Reg. 5225, effective April 1, 1983; amended at 11 Ill. Reg. 20611, effective January 1, 1988; amended at 13 Ill. Reg. 1562, effective January 23, 1989; amended at 13 Ill. Reg. 4931, effective March 22, 1989; amended at 14 Ill. Reg. 17641, effective October 16, 1990; amended at 15 Ill. Reg. 11985, effective August 12, 1991; amended at 16 Ill. Reg. 12774, effective July 31, 1992; amended at 17 Ill. Reg. 19961, effective November 9, 1993; amended at 18 Ill. Reg. 11615, effective July 7, 1994; amended at 19 Ill. Reg. 5034, effective April 1, 1995; amended at 19 Ill. Reg. 17190, effective January 1, 1996; amended at 20 Ill. Reg. 13052, effective October 1, 1996; amended at 22 Ill. Reg. 10656, effective June 1, 1998; amended at 28 Ill. Reg. 11244, effective August 1, 2004; amended at 29 Ill. Reg. 10248, effective August 1, 2005; amended at 32 Ill. Reg. 7391, effective May 1, 2008; amended at 33 Ill. Reg. 6696, effective May 1, 2009; emergency amendment at 37 Ill. Reg. 19740, effective November 20, 2013, for a maximum of 150 days; amended at 38 Ill. Reg. 6113, effective March 1, 2014; amended at 41 Ill. Reg. 12860, effective October 1, 2017; amended at 41 Ill. Reg. 13097, effective October 1, 2017; amended at 42 Ill. Reg. 20121, effective November 1, 2018.

SUBPART H: OTHER LICENSEES

ILLINOIS RACING BOARD

NOTICE OF ADOPTED AMENDMENT

Section 502.500 Jockey Agents

a) An application for a license as a jockey agent may be obtained by the following persons:~~An applicant for a jockey agent's license shall have been licensed previously as a jockey agent by the Board or by another racing jurisdiction, and shall not represent more than two jockeys.~~

1) Previously Board licensed jockey agent;

2) Person previously licensed by another racing jurisdiction as a jockey agent;

3) Board occupation licensee with a minimum year (365 days) of experience who obtains a passing grade of 75% or more on the stewards' written examination. The stewards will administer all written exams, which include subjects such as jockey engagements and horse eligibility.

b) A jockey agent may represent a maximum of two jockeys and one apprentice jockey.~~If the applicant has never been licensed as a jockey agent, the applicant shall have at least one year's experience as an occupation licensee or an employee of the Board in Illinois or a comparable racing regulatory authority in another racing jurisdiction, and shall pass with a grade of 75% a written examination administered by the stewards. The test shall cover such subjects as jockey engagements and horse eligibility.~~

(Source: Amended at 42 Ill. Reg. 20121, effective November 1, 2018)

DEPARTMENT OF REVENUE

NOTICE OF ADOPTED RULES

1) Heading of the Part: Illinois Hydraulic Fracturing Tax Act

2) Code Citation: 86 Ill. Adm. Code 475

3)

Section Numbers:	Adopted Actions:
475.100	New Section
475.105	New Section
475.110	New Section
475.115	New Section
475.120	New Section
475.125	New Section
475.130	New Section
475.135	New Section
475.140	New Section
475.145	New Section
475.150	New Section
475.160	New Section
475.165	New Section
475.170	New Section
475.175	New Section
475.180	New Section

4) Statutory Authority: 35 ILCS 450/2-65

5) Effective Date of Rules: October 25, 2018

6) Does this rulemaking contain an automatic repeal date? No

7) Does this rulemaking contain incorporations by reference? No

8) A copy of the adopted rules, including any material incorporated by reference, is on file in the Agency's principal office and is available for public inspection.

9) Notice of Proposal published in the *Illinois Register*: 42 Ill. Reg. 8453; May 25, 2018

10) Has JCAR issued a Statement of Objection to this rulemaking? No

DEPARTMENT OF REVENUE

NOTICE OF ADOPTED RULES

11) Differences between Proposal and Final Version: The only changes made were the ones agreed upon with JCAR. Only grammatical and technical changes were made. No substantive changes were made.

12) Have all the changes agreed upon by the Agency and JCAR been made as indicated in the agreement letter issued by JCAR? Yes

13) Will this rule replace an emergency rule currently in effect? No

14) Are there any rulemakings pending on this Part? No

15) Summary and Purpose of Rulemaking: Part 475 implements PA 98-22, the Illinois Hydraulic Fracturing Tax Act, codified at 35 ILCS 450 ("Act"). The Act applies to oil and gas removed on or after July 1, 2013. The tax is imposed on the severance and production of oil and gas from a well on a production unit in this State permitted, or required to be permitted, under the Illinois Hydraulic Fracturing Regulatory Act, for sale, transport, storage, profit or commercial use. Section 475.100 generally explains the nature of the tax. Section 475.105 provides the definitions of statutory and non-statutory terms used in Part 475. Section 475.110 explains the rate of tax imposed on producers of oil and gas. Section 475.115 explains how average daily production is determined for the purpose of determining the proper tax rate on oil removed from a well. Section 475.120 explains the exemptions from the tax imposed by the Act. Section 475.125 explains how the value of oil and gas is determined for purposes of imposing the tax. Section 475.130 explains how first purchasers and, in some cases, operators are to withhold the tax from payments made to producers. Section 475.135 explains how first purchasers and operators are to make payment of the tax to the Department of Revenue. Section 475.140 explains the obligations of first purchasers and operators to file returns. Section 475.145 addresses claims for credits. Section 745.150 identifies the books and records that must be maintained by first purchasers and operators. Section 475.155 explains that operators producing oil and gas subject to the tax imposed by the Act must register with the Department, maintain production records and electronically report to the Department monthly the amount of oil and gas that is produced from a well subject to the tax imposed by the Act. Section 475.160 explains the registration requirements for first purchasers and operators. Section 475.165 explains the obligations of transporters of oil and gas subject to the tax imposed by the Act. Section 475.170 explains the Local Workforce Tax Rate Reduction. Section 475.175 states that the Uniform Penalty and Interest Act and Section 13 of the Retailers' Occupation Tax Act on criminal penalties apply to the extent not inconsistent with the Act. Section 475.180 identifies the sections of the Retailers' Occupation Tax Act that are incorporated by reference into the Act.

DEPARTMENT OF REVENUE

NOTICE OF ADOPTED RULES

16) Information and questions regarding these adopted rules shall be directed to:

Richard S. Wolters
Associate Counsel
Legal Services Office
Illinois Department of Revenue
101 West Jefferson
Springfield IL 62794

217/782-2844

The full text of the Adopted Rules begins on the next page:

DEPARTMENT OF REVENUE

NOTICE OF ADOPTED RULES

TITLE 86: REVENUE
CHAPTER I: DEPARTMENT OF REVENUE

PART 475
ILLINOIS HYDRAULIC FRACTURING TAX ACT

Section

475.100 Nature of the Tax
475.105 Definitions
475.110 Tax Imposed
475.115 Average Daily Production for Wells or Production Units Subject to Tax
475.120 Exemptions from Tax
475.125 Taxable Value of Oil and Gas
475.130 Withholding of Tax
475.135 Payment of Tax
475.140 Returns
475.145 Claims and Credit Memoranda
475.150 Books and Records
475.160 Registration of Purchasers and Operators Responsible for Withholding and Remitting Tax
475.165 Transporters of Oil and Gas
475.170 Local Workforce Tax Rate Reduction
475.175 Penalties and Interest; Hearings
475.180 Incorporation by Reference

AUTHORITY: Implementing the Illinois Hydraulic Fracturing Tax Act [35 ILCS 450].

SOURCE: Adopted at 42 Ill. Reg. 20127, effective October 25, 2018.

Section 475.100 Nature of the Tax

a) The Illinois Hydraulic Fracturing Tax Act (Tax Act) imposes a tax on the severance and production of oil and gas removed from oil and gas wells in this State that are permitted, or required to be permitted, under the Hydraulic Fracturing Regulatory Act (Regulatory Act) [225 ILCS 732]. The Tax Act does not impose a tax on the severance and production of oil and gas from oil and gas wells that commenced production prior to July 1, 2013, unless the wells are subsequently required to be permitted under the Regulatory Act, or were completed on and after July 1, 2013, and were not permitted, or required to be

permitted under the Illinois Hydraulic Fracturing Regulatory Act. Purchasers and operators are not required to withhold and remit tax for oil and gas severed or produced from these latter two classes of wells.

b) *If a well is required to be permitted under the Regulatory Act, the tax imposed by the Tax Act applies, whether or not a permit was obtained* [35 ILCS 450/2-15(a)]. The failure of an operator to obtain a permit for a well subject to the tax imposed by that Tax Act does not change a producer's liability for the tax imposed by the Tax Act.

c) The tax is imposed upon the producers of oil or gas severed from a well subject to the tax imposed by the Tax Act. The purchaser of any oil or gas sold from these wells must collect the tax from the producers by deducting and withholding the tax from any payments made by the purchaser to the producers for oil or gas removed from the well. The first purchaser is responsible for remitting the tax to the Department. (See Section 2-30(a) of the Tax Act.) If oil or gas is transported off the production unit by the operator, used on the production unit, or refined on the production unit, the operator is responsible for registering with the Department, withholding the tax from any payments made by the operator to the producers and remitting the tax to the Department. (See Section 2-50(a) of the Tax Act.)

d) For wells that commenced production prior to July 1, 2013 that are not subject to the tax imposed by the Tax Act, the obligation to obtain the exemption certificate required by Section 475.130(b) only applies when a first purchaser enters into a new contract with an operator to purchase oil or gas from those wells on or after January 1, 2019. If the first purchaser meets this obligation for wells that commenced production prior to July 1, 2013, no further obligations are imposed on the first purchaser or the operator with respect to those wells.

e) First purchasers shall not be required to obtain exemption certificates from the operator pursuant to Section 475.130(b)(2) until the first high volume horizontal hydraulic fracturing permit has been approved by the Department of Natural Resources on or after January 1, 2019.

f) The first purchaser is required to obtain an exemption certificate required by Section 475.130(b):

1) when subsection (d) applies; and

2) for wells the first purchaser begins purchasing oil or gas on or after January 1, 2019.

Section 475.105 Definitions

"Average daily production" means the average amount of oil produced daily from a well, as determined by Section 475.115.

"Barrel" for oil measurement means a barrel of 42 U.S. gallons of 231 cubic inches per gallon, computed at a temperature of 60 degrees Fahrenheit.

"Department" means the Illinois Department of Revenue.

"DNR" means the Illinois Department of Natural Resources.

"Fracturing" or "hydraulic fracturing" means the propagation of fractures in a rock layer, by a pressurized fluid used to release petroleum or natural gas (including shale gas, tight gas, and coal seam gas), for extraction.

"Gas" means natural gas taken from below the surface of the earth or water in this State, regardless of whether the gas is taken from a gas well or from a well also productive of oil or any other product.

"Lease number" means the number assigned by the purchaser to identify each production unit.

"Oil" means petroleum or other crude oil, condensate, casinghead gasoline, or other mineral oil that is severed or withdrawn from below the surface of the soil or water in this State.

"Operator" means the person primarily responsible for the management and operation of oil or gas productions from a production unit.

"Person" means any natural individual, firm, partnership, association, joint stock company, joint adventure, public or private corporation, or *limited liability company, or a receiver, executor, trustee, guardian, or other representative appointed by order of any court.*

"Produced" means severed.

"Producer" means any person owning, controlling, managing, or leasing any oil or gas property or oil or gas well, and any person who severs in any manner any oil or gas in this State, and shall include any person owning any direct and beneficial interest in any oil or gas produced, whether severed by that person or some other person on their behalf, either by lease, contract, or otherwise, including working interest owners, overriding royalty owners, or royalty owners.

"Production unit" means a unit of property designated by the Department of Natural Resources from which oil or gas is severed.

"Purchaser" means a person who is the first purchaser of a product after severance from a production unit.

"Regulatory Act" means the Hydraulic Fracturing Regulatory Act [225 ILCS 732].

"Remove" or "removal" means the physical transportation of oil or gas off of the production unit where severed; and if the oil or gas is used on the premises where severed, or if the manufacture or conversion of oil or gas into refined products occurs on the premises where severed, oil or gas shall be deemed to have been removed on the date that use, manufacture, or conversion begins.

"Severed" or "severing" means:

> *the production of oil through extraction or withdrawal of the same, whether that extraction or withdrawal is by natural flow, mechanical flow, forced flow, pumping, or any other means employed to get the oil from below the surface of the earth, soil, or water and shall include the withdrawal by any means whatsoever of oil upon which the tax has not been paid, from any surface reservoir, natural or artificial, or from a water surface; and*
>
> *the production of gas through the extraction or withdrawal of the same by any means whatsoever, from below the surface of the earth, soil, or water.*

"Severance" means the taking or severing of oil or gas from below the surface of the earth*, soil, or water by any means or in any manner whatsoever.*

"Tax" means the tax levied pursuant to the Tax Act.

"Tax Act" means the Illinois Hydraulic Fracturing Tax Act [35 ILCS 450].

"Value" means the sale price of oil or gas at the time of removal of the oil or gas from the production unit and if oil or gas is exchanged for something other than cash, or if no sale occurs at the time of removal, or if the Department determines that the relationship between the buyer and the seller is such that the consideration paid, if any, is not indicative of the true value or market price, then the Department shall determine the value of the oil or gas subject to tax based on the cash price paid to one or more producers for the oil or gas or based on the cash price paid to producers for like quality oil or gas in the vicinity of the production unit at the time of the removal of the oil or gas from the production unit.

"Well" means the entire length of any drill hole, including all horizontal well bores, required to be permitted under the Illinois Oil and Gas Act [225 ILCS 725].

"Well site" has the meaning ascribed to that term in Section 1-5 of the Regulatory Act.

"Working interest" means any interest in or any right to the production of oil and gas, excluding royalty or overriding royalty interests. [35 ILCS 450/2-10]

Section 475.110 Tax Imposed

a) *Beginning July 1, 2013, a tax is imposed upon the severance and production of oil or gas from a well on a production unit in this State permitted, or required to be permitted, under the Regulatory Act, for sale, transport, storage, profit, or commercial use.* Except as provided by Section 475.170, *the tax shall be applied equally to all portions of the value of each barrel of oil severed and subject to that tax and to the value of the gas severed and subject to that tax.*

1) *For a period of 24 months from the month in which oil or gas was first produced from the well, the rate of tax shall be 3% of the value of the oil or gas severed from the earth, soil or water in this State.*

A) The 24-month period begins on the first day of the month oil or gas is first removed by a purchaser.

B) If a well was producing oil or gas prior to July 1, 2013 and operations are conducted for which a permit is required under the Regulatory Act, the 24-month period begins on the first day of the month in which oil or gas is first removed after operations are conducted for which a permit was required under the Regulatory Act.

2) Beginning the 25th month from the month in which oil was first produced from the well, the rate of tax for oil shall be as follows:

A) *where the average daily production from the well during the month is less than 25 barrels, 3% of the value of the oil severed from the earth,* soil *or water;*

B) *where the average daily production from the well during the month is 25 or more barrels but less than 50 barrels, 4% of the value of the oil severed from the earth,* soil *or water;*

C) *where the average daily production from the well during the month is 50 or more barrels but less than 100 barrels, 5% of the value of the oil severed from the earth,* soil *or water; or*

D) *where the average daily production from the well during the month is 100 or more barrels, 6% of the value of the oil severed from the earth,* soil*, or water.*

3) Beginning the 25th month from the month in which gas was first produced, *the rate of tax for gas shall be 6% of the value of the gas severed from the earth,* soil*, or water* [35 ILCS 450/2-15].

4) If a first purchaser is required to withhold tax because the operator has not supplied the purchaser with an exemption certificate required by Section 475.130(b), the first purchaser shall withhold tax at the rate of 6% of the value of oil and gas.

b) The Tax Act provides for a Local Workforce Tax Rate Reduction under certain conditions. *The rate of tax imposed on working interest owners of a well under Section 2-15 of the Tax Act shall be reduced by 0.25% for the life of the well when a minimum of 50% of the total workforce hours on the well site are performed by Illinois construction workers being paid wages equal to or exceeding the general prevailing rate of hourly wages* [35 ILCS 450/2-17]. (See Section 475.170.) To receive the Local Workforce Tax Rate Reduction, the oil from the well must be segregated and not commingled with the oil from any other well. If oil produced from a well that qualifies for the Local Workforce Tax Rate Reduction is commingled with the oil produced from any other well, the Local Workforce Tax Rate Reduction will be suspended during the period of that commingling, unless all the oil that is commingled is produced from wells that qualify for the Local Workforce Tax Rate Reduction, the producers are the same for all wells, and the amount of interest owned by each producer is the same for each well. Gas removed from a well that qualifies for the Local Workforce Tax Rate Reduction shall be separately metered prior to entering a common pipeline.

c) Measurement of Oil and Gas

1) *For the purposes of the tax imposed by the Tax Act, the amount of oil produced shall be measured or determined by tank tables* or lease automatic custody transfer (LACT) units *without deduction for overage or losses in handling. Allowance for any reasonable and bona fide deduction for basic sediment and water, and for correction of temperature to 60 degrees Fahrenheit, will be allowed.*

2) *For the purposes of the tax imposed by the Tax Act, the amount of gas produced shall be measured or determined, by meter readings showing 100% of the full volume expressed in cubic feet at a standard base and flowing temperature of 60 degrees Fahrenheit, and at the absolute pressure at which the gas is sold and purchased. Correction shall be made for pressure according to Boyle's law, and used for specific gravity according to the gravity at which the gas is sold and purchased.* [35 ILCS 450/2-15(c)]

d) *The liability for the tax accrues at the time the oil or gas is removed from the production unit* [35 ILCS 450/2-15(f)].

Section 475.115 Average Daily Production for Wells or Production Units Subject to Tax

a) For purposes of determining average daily production for oil wells or production units subject to the tax imposed by the Tax Act, oil is considered produced during the month it is removed from the production unit by the purchaser. For operators withholding and remitting tax, oil is produced during the month oil is transported off the production unit where severed by the operator, used on the production unit where severed, or manufactured and converted into refined products on the production unit where severed. Average daily production for a month is determined by dividing the number of the total barrels produced in a month by 30.

b) If an operator commingles the production from multiple wells on a production unit, the multiple wells shall be deemed one well for purposes of determining average daily production. Average daily production for a month is determined by dividing the number of the barrels removed by the first purchaser in a month by 30 and dividing the result by the number of wells in the production unit. If a well on the production unit did not produce any oil during the month, it may not be considered in calculating average daily production.

c) Operators must include the oil identified in Section 475.120(a) when calculating average daily production.

d) The average daily production shall be calculated by the operator twice a year by taking the sum of the average daily production for each well or production unit for the months of January, February, March, April, May and June and dividing the number by 6, and for the months of July, August, September, October, November and December and dividing the number by 6. The purchaser shall use the average daily production calculated by the operator for purposes of determining the tax to be withheld and remitted to the Department in accordance with Sections 475.130 and 475.135. If the operator fails to provide the average daily production for a well or production unit to the first purchaser, the first purchaser shall withhold tax at the rate of 6%. After providing an initial certification, the operator is required to provide the first purchaser with a new certification only when the average daily production for a 6-month period would cause the rate of tax to change. When tax is being withheld at the rate of 6%, the operator has no obligation to calculate and report average daily production.

e) If a purchaser and its employees have no actual knowledge that the average daily production reported to it by the operator is incorrect, and the Department later determines the operator provided to the purchaser an incorrect figure resulting in

an underpayment of tax, the Department will collect any underpayment from the operator and producers. Prior to the purchaser or its employees obtaining actual knowledge that the average daily production reported to it by the operator for the purpose of withholding and remitting the tax imposed by the Tax Act is incorrect, a first purchaser has no obligation to calculate the average daily production on a well or production unit to verify an operator's certification. If the Department provides a purchaser or an operator required to withhold and remit the tax with a lien in the amount of any assessment for underpayment of tax, penalty and interest, the purchaser or operator shall suspend payment of oil proceeds from the well to the producers until such time as the purchaser or operator receives a release of lien. A purchaser and an operator shall also honor any levy issued to it to collect amounts withheld pursuant to a lien. The Department retains all other legal remedies to collect the underpayment from the producers.

Section 475.120 Exemptions from Tax

a) *All oil and gas removed from the premises where severed is subject to tax imposed by the Tax Act unless exempt under the terms of the Tax Act* [35 ILCS 450/2-15]. The following severance and production of oil is not exempt from the tax imposed by the Tax Act:

1) oil manufactured and converted into refined products on the production unit where severed; and

2) oil used on the production unit where severed.

b) *Oil produced from a well whose average daily production is 15 barrels or less for the 12-month period immediately preceding the month of production is exempt from the tax imposed by the Tax Act* [35 ILCS 450/2-15(b)].

1) The Tax Act imposes a tax at the rate of 3% for the first 24 months of production. The first 12-month period for purposes of the exemption begins on the first day of the 13th month after oil is first removed from an oil well or production unit. After the first 24 months of production, a calculation can be made to determine if a well or production unit is exempt.

2) To determine whether oil production is exempt from tax imposed by the Tax Act, the average daily production is determined in accordance with Section 475.115.

3) When a well or production unit qualifies for the exemption based on the average daily production, the operator is responsible for notifying the purchaser of the exemption. The operator has 30 days from the end of the 12-month period to notify the first purchaser that a well or production unit no longer qualifies for the exemption. The first purchaser has 30 days to make the change to its records after it receives notice from the operator. The exemption begins on the first of a month. Once a well or production unit qualifies for the exemption, the operator annually shall determine whether oil production from a well or production unit remains exempt and shall notify the purchaser when the exempt status of a well or production unit changes.

A) EXAMPLE: An operator determines that the average daily production of oil from a well for the immediately preceding 12-month period May through April is 15 barrels. The operator notifies the first purchaser on or before May 31. Oil removed from the well or production unit beginning June 1 is exempt. The operator must calculate the average daily production the following year and each year thereafter using the period May through April.

B) EXAMPLE: On May 20, the operator determines the annual average daily production of oil from a well for the period May through April is 16 barrels. The operator notifies the first purchaser on June 20. The first purchaser has 30 days to make the change on its records. The exemption ends on the first of the month. Oil removed on and after August 1 is no longer exempt from tax.

C) EXAMPLE: In May the operator determines the annual average daily production of oil from May through April is less than 15 barrels. The operator notifies the purchaser on July 2. The purchaser has 30 days to make the change. The purchaser should discontinue withholding and remitting tax on oil produced from the well beginning September 1.

D) EXAMPLE: On May 21, the operator determines the annual average daily production of oil from May through April is 25 barrels. The operator does not notify the first purchaser until December 15. The purchaser starts withholding and remitting tax on February 1. Oil removed from the well or production unit beginning July 1 was no longer exempt from tax. The operator and producers are liable for tax, penalties and interest for oil produced in the months of July through January. When the purchaser is notified that the proper tax was not withheld, the purchaser must calculate the tax that should have been collected for the months of July through January and notify the Department. The purchaser must suspend payments to the producers on the well until the tax is collected from the producers. The Department will notify the purchaser of the amount of penalties and interest the producers owe for the period. The purchaser should suspend, or continue to suspend, payment to the producers on the well until the Department notifies the purchaser that penalties and interest, as well as any unpaid tax, has been collected from the producers.

c) *The following severance and production of gas shall be exempt from the tax imposed by the Tax Act:*

1) *gas injected into the earth for the purpose of lifting oil, recycling, or repressuring;*

2) *gas used for fuel in connection with the operation and development for, or production of, oil or gas in the production unit where severed;*

3) *gas lawfully vented or flared; and*

4) *gas inadvertently lost on the production unit by reason of leaks, blowouts, or other accidental losses.* [35 ILCS 450/2-15(d)]

d) If a purchaser and its employees have no actual knowledge that the average daily production reported to it by the operator for the purpose of withholding and remitting the tax imposed by the Tax Act is incorrect and the Department later determines the operator provided to the purchaser an incorrect figure to use for purposes of withholding and remitting the tax imposed by the Tax Act resulting in an underpayment of tax, the Department will collect any underpayment from the

operator and producers. Prior to the purchaser and its employees obtaining actual knowledge that the average daily production reported to it by the operator for the purpose of withholding and remitting the tax imposed by the Tax Act is incorrect, a first purchaser has no obligation to calculate the average daily production on a well or production unit to verify an operator's certification. If the Department provides a purchaser or an operator required to withhold and remit the tax and file a return with a lien in the amount of any assessment for underpayment of tax, penalty and interest, the purchaser or operator shall suspend payment of oil proceeds from the well to the producers until such time as the purchaser or operator receives a release of lien. A purchaser and an operator shall also honor any levy issued to it to collect amounts withheld pursuant to a lien. The Department retains all other legal remedies to collect the underpayment from the producers.

Section 475.125 Taxable Value of Oil and Gas

a) The value of oil and gas is the sales price paid by the purchaser for the oil or gas produced, measured in accordance with Section 475.110(c), without any reduction for transportation charges or other charges imposed on the operator for services rendered by the purchaser in removing the oil from the production unit. If the operator transports oil and gas off the production unit where severed, the operator uses the oil and gas on the production unit where severed, or the manufacture and conversion of oil and gas into refined products occurs on the production unit where severed, the value of the oil and gas is the sales price paid by the operator, measured in accordance with Section 475.110(c), without any reduction for transportation charges or other charges imposed by the operator for services rendered by the operator in severing or removing the oil or gas from the production unit. *If oil or gas is exchanged for something other than cash, or if no sale occurs at the time of removal, or if the Department determines that the relationship between the buyer and the seller is such that the consideration paid, if any, is not indicative of the true value or market price, then the Department shall determine the value of the oil or gas subject to tax based on the cash price paid to one or more producers for the oil or gas or based on the cash price paid to producers for like quality oil or gas in the vicinity of the production unit at the time of the removal of the oil or gas from the production unit.* [35 ILCS 450/2-10]

b) *The Department may determine the value of oil and gas severed from a production unit when the operator and purchaser are affiliated persons, when the*

sale and purchase of oil and gas is not an arm's length transaction, or when oil and gas are severed and removed from a production unit and a value is not established for that oil and gas. The value determined by the Department shall be commensurate with the actual price received for oil and gas of like quality, character, and use that are severed in the same field or area. If there are no sales of oil or gas of like quality, character, and use severed in the same field or area, then the Department shall establish a reasonable value based on sales of oil and gas of like quality, character, and use that are severed in other areas of the State, taking into consideration any other relevant factors. [35 ILCS 450/2-20]

Section 475.130 Withholding of Tax

a) *Any purchaser who makes a monetary payment to a producer for his or her portion of the value of oil and gas from a production unit shall withhold from that payment the amount of tax due from the producer. Any purchaser who pays any tax due from a producer shall be entitled to reimbursement from the producer for the tax so paid and may take credit for that amount from any monetary payment to the producer for the value of the oil and gas. To the extent that a purchaser required to collect the tax imposed by the Tax Act has actually collected that tax, the tax is held in trust for the benefit of the State of Illinois.* [35 ILCS 450/2-25]

b) Withholding of Tax by Purchasers

1) *The tax imposed by the Tax Act is upon the producers of the oil or gas in the proportion to their respective beneficial interests at the time of severance. The first purchaser of any oil or gas sold shall collect the amount of the tax due from the producers by deducting and withholding that amount from any payments made by the purchaser to the producers and shall remit the tax imposed by the Tax Act to the Department.* [35 ILCS 450/2-30(a)]

2) *The first purchaser is required to withhold and remit the tax imposed by the Tax Act to the Department from the oil and gas purchased from the production unit unless the first purchaser obtains from the operator an exemption certificate signed by the operator stating that the production unit is not subject to the tax imposed by the Tax Act.*

A) Wells Drilled Prior to July 1, 2013

i) For production units containing wells drilled prior to July 1, 2013 and from which the first purchaser commences purchasing oil or gas on or after January 1, 2019, the exemption certificate must include the following information:

- name and address of the operator;
- common name of the production unit and the number assigned to the production unit by the prior first purchaser;
- a statement by the operator that he or she will promptly notify the first purchaser in the event that the well becomes subject to the tax imposed by the Tax Act; and
- a statement by the operator that the production unit is exempt from the tax imposed by the Tax Act.

ii) The first purchaser shall maintain in its books and records the legal description of each production unit identified in the exemption certificate. The operator may provide, and the first purchaser may accept, one exemption certificate containing the name of the operator, the common names and numbers of all the production units, and the statements required by subsections (b)(2)(A)(i), third and fourth bullets.

B) For wells drilled on or after January 1, 2019, *the exemption certificate must include the following information:*

i) *name and address of the operator;*

ii) common *name* of the well on the permit issued by DNR;

iii) *number assigned to the production unit by the first purchaser, if available;*

iv) *legal description of the production unit;*

v) well reference number on the permit issued by DNR;

vi) a statement by the operator that he or she will promptly notify the first purchaser in the event that the well becomes subject to the Tax Act; and

vii) *a statement by the operator that the production unit is exempt from the tax imposed by the Tax Act.* [35 ILCS 450/2-30(b)]

3) An operator must promptly notify the first purchaser in the event that a well certified as exempt from the tax imposed by the Tax Act becomes subject to tax.

4) The purchaser is not required to obtain a new exemption certificate if the operator providing the exemption certificate to the purchaser assigns or transfers operations and management of the well to a new operator.

5) *If a first purchaser obtains an exemption certificate that contains the required information and reasonably relies on the exemption certificate and it is subsequently determined by the Department that the production unit is subject to the tax imposed by the Tax Act, the Department will collect any tax that is due from the operator and producers, and the first purchaser is relieved of any liability* [35 ILCS 450/2-30(b)]. During any determination by the Department of whether the first purchaser reasonably relied on an exemption certificate, the Department will inquire whether the purchaser had any information or knowledge that would lead a reasonable person to believe the statement provided by the operator that the production unit is exempt was false. If the Department provides a purchaser with a lien in the amount of any assessment for underpayment of tax, penalty and interest, the purchaser shall suspend payment of oil or gas proceeds from the well to the producers until such time as the purchaser receives a release of lien. A purchaser shall also honor any levy issued to it to collect amounts withheld pursuant to a lien. The Department retains all other legal remedies to collect the underpayment from the producers.

6) *When the title to any oil or gas severed from the earth,* soil*, or water is in dispute and the purchaser of that oil or gas is withholding payments on account of litigation, or for any other reason, the purchaser is hereby authorized, empowered, and required to deduct from the gross amount thus held the amount of the tax imposed and to make remittance of the tax to the Department as provided in the Tax Act* [35 ILCS 450/2-55].

7) If a purchaser purchases oil or gas from an operator or person claiming to be acting as a purchaser for purposes of the Tax Act, or the operator or person requests payment for 100% of the value of the oil or gas without withholding the tax imposed by the Tax Act, the purchaser shall obtain a written withholding certification from the operator or person for each well or production unit from which oil or gas is removed, subject to the tax imposed by the Tax Act.

A) The withholding certification shall contain the following information:

i) name and address of the operator or person;

ii) common name of the well on the permit issued by DNR;

iii) number assigned to the production unit by the operator, if available;

iv) legal description of the production unit;

v) well reference number on the permit issued by DNR;

vi) the certificate of registration number obtained by the operator or person from the Department under Section 475.160; and

vii) a statement by the operator or person stating that the tax imposed by the Tax Act will be withheld and paid by the operator or person.

B) The purchaser shall maintain the certification in its records. The purchaser is prohibited from paying 100% of the value of the oil or

gas removed from wells subject to the tax imposed by the Tax Act to any operator or person without withholding the tax imposed by the Tax Act unless the purchaser obtains from the operator or person a certificate of registration number issued by the Department under Section 475.160. A withholding certificate is not required if the oil or gas purchased from the wells or production units by the purchaser is not subject to the tax imposed by the Tax Act.

c) Withholding of Tax by Operators

1) The tax imposed by the Tax Act is upon the producers of the oil or gas in proportion to their respective beneficial interests at the time of severance. *Any operator who makes a monetary payment to a producer for his or her portion of the value of products from a production unit shall withhold from that payment the amount of tax due from the producer. Any operator who pays any tax due from a producer shall be entitled to reimbursement from the producer for the tax so paid and may take credit for that amount from any monetary payment to the producer for the value of products. To the extent that an operator required to collect the tax imposed by the Tax Act has actually collected that tax, the tax is held in trust for the benefit of the State of Illinois.* [35 ILCS 450/2-50(c)] (See Section 475.135(b).)

2) *When the title to any oil or gas severed from the earth or water is in dispute and the operator of the oil or gas is withholding payments on account of litigation, or for any other reason, the operator is hereby authorized, empowered and required to deduct from the gross amount thus held the amount of the tax imposed and to make remittance of the tax to the Department as provided in this Section* [35 ILCS 450/2-50(e)].

Section 475.135 Payment of Tax

a) Payment by Purchasers

1) *The tax incurred under the Tax Act shall be due and payable on or before the last day of the month following the end of the month in which the oil or gas is removed from the production unit. The tax is upon the producers of the oil or gas in the proportion to their respective beneficial interests at the time of severance.* [35 ILCS 450/2-30(a)]

2) *In the event the tax shall be withheld by a purchaser from payments due a producer and the purchaser fails to make payment of the tax to the State as required by the Tax Act, the first purchaser shall be liable for the tax. However, in the event a first purchaser fails to pay the tax withheld from a producer's payment, the producer's interest remains subject to any lien filed pursuant to subsection (a)(3) of this Section. A producer shall be entitled to bring an action against the purchaser to recover the amount of tax so withheld, together with penalties and interest that may have accrued by failure to make the payment. A producer shall be entitled to all attorney fees and court costs incurred in such action. To the extent that a producer liable for the tax imposed by the Tax Act collects the tax, and any penalties and interest, from a purchaser, the tax, penalties, and interest are held in trust by the producer for the benefit of the State.* [35 ILCS 450/2-30(a)]

3) *Notwithstanding subsections (a)(1) and (a)(2) of this Section, the tax is a lien on the oil and gas from the time of severance from the earth, soil, or water until the tax and all penalties and interest are fully paid, and the State shall have a lien on all the oil or gas severed from the production unit in this State in the hands of the operator, any producer or the first or any subsequent purchaser, to secure the payment of the tax. If a lien is filed by the Department, the purchaser shall withhold from producers or operators the amount of tax, penalty, and interest identified in the lien.* [35 ILCS 450/2-30(c)]

b) Payment by Operators

1) *If oil or gas subject to the tax imposed by the Tax Act is transported off the production unit where severed by the operator, used on the production unit where severed, or the manufacture and conversion of oil and gas into refined products occurs on the production unit where severed, the operator is responsible for remitting the tax imposed under the Tax Act, on or before the last day of the month following the end of the calendar month in which the oil and gas is removed from the production unit, and that payment shall be accompanied by a return to the Department showing the gross quantity of oil or gas removed during the month for which the return is filed, the price paid therefor, and, if no price is paid, the value of the oil and gas, a description of the production unit from which the oil or*

gas was severed, and the amount of tax. The Department may require any additional information it may deem necessary for the proper administration of the Tax Act. [35 ILCS 450/2-50(a)]

2) *In the event the operator fails to make payment of the tax to the State as required by the Tax Act, the operator shall be liable for the tax.* However, in the event a first purchaser fails to pay the tax withheld from a producer's payment, the producer's interest remains subject to any lien filed pursuant to subsection (b)(3). *A producer shall be entitled to bring an action against the operator to recover the amount of tax so withheld, together with penalties and interest that may have accrued by failure to make the payment. A producer shall be entitled to all attorney fees and court costs incurred in such action. To the extent that a producer liable for the tax imposed by the Tax Act collects the tax, and any penalties and interest, from an operator, the tax, penalties, and interest are held in trust by the producer for the benefit of the State.* [35 ILCS 450/2-50(d)]

3) Notwithstanding subsections (b)(1) and (b)(2) of this Section, the tax is a lien on the oil and gas from the time of severance from the earth, soil, or water until the tax and all penalties and interest are fully paid, and *if oil or gas is transported off the production unit where severed by the operator and sold to a purchaser or refiner, the State shall have a lien on all the oil or gas severed from the production unit in this State in the hands of the operator, the first or any subsequent purchaser, or refiner to secure the payment of the tax. If a lien is filed by the Department, the purchaser or refiner shall withhold from the operator the amount of tax, penalty and interest identified in the lien.* [35 ILCS 450/2-50(g)]

Section 475.140 Returns

a) Returns Filed by Purchasers

1) When a purchaser begins to purchase oil or gas from a well subject to the tax imposed by the Tax Act, the *purchaser shall make a return to the Department showing the quantity of oil or gas purchased during the month for which the return is filed, the price paid, total value, the name and address of the operator or other person from whom the same was purchased, a description of the production unit in the manner prescribed by the Department from which the oil or gas was severed, and the amount*

of tax due from each production unit for each calendar month. All taxes due, or to be remitted, by the purchaser shall accompany this return. The return shall be filed on or before the last day of the month after the calendar month for which the return is required. The Department may require any additional report or information it may deem necessary for the proper administration of the Tax Act. [35 ILCS 450/2-45] The purchaser shall also provide a breakdown of the tax by the total percentage of royalty interest, total percentage of overriding royalty interest, and total percentage of working interest.

2) Oil and gas is purchased during the month it is removed from the production unit. The month in which the oil is measured or gauged by a first purchaser is not controlling, nor is the month of payment of proceeds to the producers and interest owners.

EXAMPLE: The first purchaser measures the quantity of oil in a tank on January 28 but removes the oil from the production unit on February 3. The first purchaser pays the interest owners for the oil removed on February 3 at the time interest owners are paid for the oil removed during the month of January. The oil removed from the production unit on February 3 must be reported on the return filed for the month of February and the tax shall accompany the February return filed on or before the end of the month.

3) *Returns shall be filed electronically in the manner prescribed by the Department. Purchasers shall make all payments of that tax to the Department by electronic funds transfer unless the Department grants an exception upon petition of a purchaser.* Payment may be made either by ACH debit or ACH credit. *Purchasers' returns must be accompanied by appropriate computer generated magnetic media supporting schedule data in the format required by the Department.* [35 ILCS 450/2-45]

4) If an operator fails to provide a purchaser with the exemption certificate required by Section 475.130(b)(2) and, as a result, the purchaser must withhold tax, the purchaser must register with the Department and file the returns required by this Section.

b) Returns Filed by Operators

1) *Payment of taxes by operators shall be accompanied by a return to the Department showing the gross quantity of oil or gas removed during the month for which the return is filed, the price paid, and if no price is paid, the value of the oil and gas, a description of the production unit from which the oil or gas was severed, and the amount of tax. The Department may require any additional information it may deem necessary for the proper administration of the Tax Act.* [35 ILCS 450/2-50(a)] The operator shall also provide a breakdown of the tax by the total percentage of royalty interest, total percentage of overriding royalty interest and total percentage of working interest.

2) *Operators shall file all returns electronically in the manner prescribed by the Department unless, as provided by rule, the Department grants an exception upon petition of an operator. Operators shall make all payments of that tax to the Department by electronic funds transfer unless the Department grants an exception upon petition of an operator.* Payment made be made by either ACH debit or ACH credit. *Operators' returns must be accompanied by appropriate computer generated magnetic media supporting schedule data in the format required by the Department.* [35 ILCS 450/2-50(b)]

Section 475.145 Claims and Credit Memoranda

Operators withholding tax and filing returns and first purchasers may file claims in accordance with Sections 6, 6a and 6b of the Retailers' Occupation Tax Act.

Section 475.150 Books and Records

a) *All of the provisions of Section 7 of the Retailers' Occupation Tax Act* [35 ILCS 120] *that are not inconsistent with the Tax Act shall apply, as far as practicable, to the subject matter of the Tax Act to the same extent as if those provisions were included in the Tax Act* [35 ILCS 450/2-70].

b) Every purchaser that removes oil or gas from a production unit, and every operator that transports *oil or gas off the production unit where severed, uses oil or gas on the production unit where severed by the operator, or manufactures and converts oil and gas into refined products on the production unit where severed* [35 ILCS 120/2-10], shall keep books and records, of all oil and gas removed, transported, used, manufactured or converted, together with invoices, bills of

lading, sales records, production records, copies of bills of sale, and other pertinent papers and documents. For purposes of this Section, "records" means all data maintained by the taxpayer, including data on paper, microfilm, microfiche, diskettes, flash drives, servers (whether owned by the taxpayer or a third-party), or any type of machine-sensible data compilation. (See 35 ILCS 120/7.)

c) For each production unit for which a purchaser or operator is required to withhold and remit tax pursuant to Section 475.130, the purchaser or operator shall maintain in his or her books and records the following information:

1) Production Unit Information

A) name and address of the operator;

B) common name of the well on the permit issued DNR;

C) number assigned to the production unit by the operator; and

D) legal description of the production unit.

2) Producer/Owner Information

A) the names, addresses, social security numbers or FEINs of the producers;

B) the percentage of interest owned in the well for each royalty interest owner, overriding royalty interest owner and working interest owner; and

C) the rate of tax imposed on each producer and the amount of tax withheld from each producer.

d) All books and records and other papers and documents required by the Tax Act and this Part to be kept shall be kept in the English language and shall, at all times during business hours of the day, be subject to inspection by the Department or its duly authorized agents and employees. (See 35 ILCS 120/7.)

e) For wells a first purchaser begins to purchase oil and gas on or after January 1, 2019, unless the purchaser obtains a properly completed and executed

certification under Section 475.130(b)(2), it shall be presumed that all sales of oil and gas from those wells are subject to tax under the Tax Act until the contrary is established. The burden of proving that oil and gas is not taxable under the Tax Act shall be upon the person who would be required to remit the tax to the Department if the transaction is taxable. In the course of any audit, investigation or hearing by the Department with reference to a given taxpayer, if the Department finds that the taxpayer lacks documentary evidence needed to support the taxpayer's claim to exemption from the tax, the Department is authorized to notify the taxpayer in writing to produce that evidence. The taxpayer shall have 60 days, subject to the right of the Department to extend this period either on request for good cause shown or on its own motion from the date when notice is sent to the taxpayer by certified or registered mail (or delivered to the taxpayer if the notice is served personally), in which to obtain and produce the evidence for the Department's inspection. If sufficient evidence is not produced, the matter shall be closed and the oil and gas shall be conclusively presumed to be taxable. (See 35 ILCS 120/7.)

f) *The Department shall have the power:*

1) *to require any operator, producer, transporter, or person purchasing any oil or gas severed from the earth,* soil, *or water to furnish any additional information deemed to be necessary for the purpose of computing the amount of the tax;*

2) *for the purpose of tax computation, to examine the meter and other charts, books, records, and all files of that person; and*

3) *for the purpose of tax computation, to issue subpoenas and examine witnesses under oath. If any witness shall fail or refuse to appear at the request of the Director, or refuses access to books, records, and files, the circuit court of the proper county, or the judge of that court, on application of the Department, shall compel obedience by proceedings for contempt, as in the case of disobedience of the requirements of a subpoena issued from that court or a refusal to testify before that court.* [35 ILCS 450/2-40]

Section 475.160 Registration of Purchasers and Operators Responsible for Withholding and Remitting Tax

a) *A person who engages in business as a purchaser of oil or gas in this State* subject to the tax imposed by the Tax Act *shall register with the Department. Application for a certificate of registration shall be made to the Department upon forms furnished by the Department and shall contain any reasonable information the Department may require. Upon receipt of the application for a certificate of registration in proper form, the Department shall issue to the applicant a certificate of registration.* [35 ILCS 450/2-35] A first purchaser does not have any obligation to register with the Department until it begins to purchase oil or gas from a well on a production unit in this State permitted, or required to be permitted, under the Regulatory Act or is required to withhold and remit tax because the operator fails to provide a properly completed and executed certification under Section 475.130(b)(2).

b) *An operator required to file a return and pay the tax under this* Part *shall register with the Department. Application for a certificate of registration shall be made to the Department upon forms furnished by the Department and shall contain any reasonable information the Department may require. Upon receipt of the application for a certificate of registration in proper form, the Department shall issue to the applicant a certificate of registration.* [35 ILCS 450/2-50(f)]

c) *The Department has the power, after* 20 days notice *and an opportunity for a hearing, to revoke a certificate of registration issued by the Department if the holder of the certificate of registration fails to file a return, or to pay the tax, fee, penalty, or interest shown in a filed return, or to pay any final assessment of tax, fee, penalty, or interest, as required by the Tax Act or any other tax or fee Act administered by the Department* [20 ILCS 2505/2505-380(a)].

d) *The Department may refuse to issue a certificate of registration authorized to be issued by the Department if a person who is named as the owner, a partner, a corporate officer, or, in the case of a limited liability company, a manager or member, of the applicant on the application for the certificate of registration is or has been named as the owner, a partner, a corporate officer, or, in the case of a limited liability company, a manager or member, on the application for the certificate of registration of a person that is in default for moneys due under the Tax Act or any other tax or fee Act administered by the Department. For purposes of this* subsection *only, in determining whether a person is in default for moneys due, the Department shall include only amounts established as a final liability within the 20 years prior to the date of the Department's notice of refusal to issue the certificate of registration. For purposes of this Section, "person"*

means any natural individual, firm, partnership, association, joint stock company, joint adventure, public or private corporation, or limited liability company, or a receiver, executor, trustee, guardian or other representative appointed by order of any court. [20 ILCS 2505/2505-380(b)]

e) Each application for a certificate of registration filed pursuant to subsections (a) and (b) shall be signed and verified and shall state:

1) the name and social security number or FEIN of the applicant;

2) the address of his or her principal place of business;

3) the address of the place of business (excluding the addresses of wells and production units) from which he or she engages in the business of purchasing oil or gas or conducting operations in this State;

4) the name and address of the person or persons who will be responsible for filing returns and payment of taxes due under the Tax Act;

5) in the case of a publicly traded corporation, the FEIN of the corporation, and the name and title of the Chief Financial Officer, Chief Operating Officer, and any other officer or employee with responsibility for preparing tax returns under the Tax Act; and, in the case of all other corporations, the FEIN of the corporation and the name, title, and social security number of each corporate officer;

6) in the case of a limited liability company, the name, social security number or FEIN of each manager and member; and

7) in the case of a partnership, the name, title, social security number or FEIN of each general partner and each limited partner, if any.

Section 475.165 Transporters of Oil and Gas

When requested by the Department, all transporters of oil or gas subject to the tax imposed by the Tax Act *out of, within or across the State of Illinois shall be required to furnish the Department information relative to the transportation of that oil or gas as the Department may require. The Department shall have authority to inspect bills of lading, waybills, meters, or other charts, documents, books and records as may relate to the transportation of oil or gas in*

the hands of each transporter. The Department shall further be empowered to demand the production of the bills of lading, waybills, charts, documents, books, and records relating to the transportation of oil or gas at any point in the State. [35 ILCS 450/2-60] For purposes of this Section, "transporter" includes any person that removes oil from a production unit.

Section 475.170 Local Workforce Tax Rate Reduction

a) *The rate of tax imposed on working interest owners of a well under Section 2-15 of the Tax Act shall be reduced by 0.25% for the life of the well when a minimum of 50% of the total workforce hours on the well site are performed by Illinois construction workers being paid wages equal to or exceeding the general prevailing rate of hourly wages.* (See Section 475.1105(b).)

b) *When more than one well is drilled on a well site, total workforce hours shall be determined on a well-by-well basis.* If the operator intends to drill more than one well on a production unit, workforce hours for common costs, such as building lease roads and a well pad to be used by multiple wells, shall be allocated to the first well drilled on the production unit. If an operator files documentation to claim the Local Workforce Tax Rate Reduction for multiple wells on a production unit no later than the 6 months after the date of the first purchase of oil or gas from the first well on the production unit for which the reduction is claimed, the operator may allocate the common costs equally between the multiple wells.

c) *Any operator that intends to claim the reduction provided for in this Section on his or her behalf, or on the behalf of the working interest owners, shall be responsible for obtaining from all construction contractors working on a well site, records to document the claim for the reduction in tax rate.*

1) *Operators shall, at a minimum, obtain from construction contractors, in writing:*

A) *the total number of construction workers that performed work under the contract;*

B) *the number of Illinois construction workers that performed work under the contract, whether oral or written, between the operator and the construction contractor;*

C) *the hours worked by each construction worker; and*

D) *the wage paid to each construction worker for the hours of work performed on the well site.*

2) *The operator shall obtain and retain any other records the Department determines are necessary to verify a claim for a reduction in the tax. The operator shall make the records available to the Department upon request.*

3) *For the purposes of this Section, each construction contractor, upon written request from the operator, shall retain the following records:*

A) *each worker's name, address, and telephone number, if available;*

B) *years of residency in Illinois;*

C) *the type of work the workers perform;*

D) *the hourly wages paid each worker; and*

E) *the number of hours worked by each worker for the term of the contract.*

4) *The construction contractor shall retain any other records the Department determines are necessary to verify a claim for a reduction in the tax. The construction contractor shall make the records available to the operator and Department upon request. The operator and construction contractors shall retain the records for 3 years.*

5) *No later than the 6 months after the date of the first purchase of oil or gas from a well, the operator shall file with the Department, in the form and manner required by the Department, a report and documentation to support that the working interest owners qualify for the reduction in the rate of tax provided for in this Section. The report shall be signed by the operator, or an officer, employee, or agent of the contractor, and state under oath that he or she has examined the report and documentation and the report and documentation are true and accurate. The Department shall keep the records submitted in accordance with this subsection for a period of not less than 3 years from the date of filing.*

d) No later than 60 days after receipt of a report and complete documentation to support that the working interest owners qualify for the reduction in the rate of tax, *the Department shall notify the first purchaser and the operator when the working interest owners qualify for a reduction in the tax under this Section and state the amount of the reduction. The reduction shall be effective the date of first production. The first purchaser or operator may take a credit for any retroactive reduction in the tax rate on a return filed under Sections 2-45 and 2-50 of the Tax Act.*

e) *Reports shall be filed on forms furnished and prescribed by the Department and shall contain any other information the Department may reasonably require.* [35 ILCS 450/2-17]

Section 475.175 Penalties and Interest; Hearings

a) All provisions of the Uniform Penalty and Interest Act [35 ILCS 735] that are not inconsistent with the Tax Act shall apply. *Any officer or employee of any taxpayer subject to the provisions of the Tax Act who has the control, supervision or responsibility of filing returns and making payment of the amount of any trust tax imposed in accordance with the Tax Act and who willfully fails to file the return or make the payment to the Department or willfully attempts in any other manner to evade or defeat the tax shall be personally liable for a penalty equal to the total amount of tax unpaid by the taxpayer, including interest and penalties.* [35 ILCS 735/3-7]

b) The criminal penalties contained in Section 13 of the Retailers' Occupation Tax Act [35 ILCS 120] that are not inconsistent with the Tax Act shall apply.

c) Any person aggrieved by any decision of the Department under this Part may, within 60 days after notice of the decision, protest and request a hearing. After receipt of the request for a hearing, the Department shall give notice to the person of the time and place fixed for the hearing, shall hold a hearing, and shall issue its final administrative decision in the matter to the person. In the absence of a protest within 60 days, the Department's decision shall become final without any further determination being made or notice given.

Section 475.180 Incorporation by Reference

DEPARTMENT OF REVENUE

NOTICE OF ADOPTED RULES

All of the provisions of Sections 4, 5, 5a, 5b, 5c, 5d, 5e, 5f, 5g, 5j, 6, 6a, 6b, 6c, 7, 8, 9, 10, 11, 11a, 12, and 13 of the Retailers' Occupation Tax Act that are not inconsistent with the Tax Act, and all provisions of the Uniform Penalty and Interest Act, shall apply, as far as practicable, to the subject matter of the Tax Act to the same extent as if those provisions were included in the Tax Act [35 ILCS 450/2-70].

JOINT COMMITTEE ON ADMINISTRATIVE RULES

STRATTON OFFICE BUILDING
ROOM C-1
SPRINGFIELD, ILLINOIS
NOVEMBER 13, 2018
10:30 A.M.

NOTICE: It is the policy of the Committee to allow only representatives of State agencies to testify orally on any rule under consideration at Committee hearings. If members of the public wish to express their views with respect to a proposed rule, they should submit written comments to the Office of the Joint Committee on Administrative Rules at the following address:

Joint Committee on Administrative Rules
700 Stratton Office Building
Springfield, Illinois 62706

RULEMAKINGS SCHEDULED FOR JCAR REVIEW

The following rulemakings are scheduled for review at this meeting. JCAR staff may be proposing action with respect to some of these rulemakings. JCAR members may have questions concerning, and may initiate action with respect to, any item scheduled for JCAR review and any other issues within the Committee's purview.

PROPOSED RULEMAKING

Children and Family Services

1. Licensing Standards for Day Care Homes (89 Ill. Adm. Code 406)
   -First Notice Published: 42 Ill. Reg. 8366 – 5/25/18

   -Expiration of Second Notice: 12/2/18

2. Licensing Standards for Day Care Centers (89 Ill. Adm. Code 407)
   -First Notice Published: 42 Ill. Reg. 8369 – 5/25/18

   -Expiration of Second Notice: 12/2/18

3. Licensing Standards for Group Day Care Homes (89 Ill. Adm. Code 408)
   -First Notice Published: 42 Ill. Reg. 8372 – 5/25/18

   -Expiration of Second Notice: 12/2/18

Community College Board

4. Administration of the Illinois Public Community College Act (23 Ill. Adm. Code 1501)
-First Notice Published: 42 Ill. Reg. 7990 – 5/18/18

-Expiration of Second Notice: 11/30/18

5. High School Diploma for Adult Learners (23 Ill. Adm. Code 1506)
-First Notice Published: 42 Ill. Reg. 8375 – 5/25/18

-Expiration of Second Notice: 11/30/18

Environmental Protection Agency

6. Collection of Out-of-Service Mercury Thermostats (35 Ill. Adm. Code 190)
-First Notice Published: 42 Ill. Reg. 14342 – 8/3/18

-Expiration of Second Notice: 11/15/18

Financial and Professional Regulation

7. Real Estate Apraiser Licensing (68 Ill. Adm. Code 1455)
-First Notice Published: 42 Ill. Reg. 15525 – 8/17/18

-Expiration of Second Notice: 11/28/18

8. Optometric Practice of 1987 (68 Ill. Adm. Code 1320)
-First Notice Published: 41 Ill. Reg. 15448 – 12/29/17

-Expiration of Second Notice: 12/5/18

Health Facilities and Services Review Board

9. Processing, Classification Policies and Review Criteria (77 Ill. Adm. Code 1110)
-First Notice Published: 42 Ill. Reg. 16119 – 8/24/18

-Expiration of Second Notice: 11/30/18

Healthcare and Family Services

10. Medical Payment (89 Ill. Adm. Code 140)
-First Notice Published: 42 Ill. Reg. 8119 – 5/18/18

-Expiration of Second Notice: 11/28/18

11. Medical Payment (89 Ill. Adm. Code 140)

-First Notice Published: 42 Ill. Reg. 13411 – 7/13/18

-Expiration of Second Notice: 12/9/18

12. Hospital Services (89 Ill. Adm. Code 148)
-First Notice Published: 42 Ill. Reg. 13415 – 7/13/18

-Expiration of Second Notice: 12/9/18

13. Diagnosis Related Grouping (DRG) Prospective Payment System (PPS) (89 Ill. Adm. Code 149)
-First Notice Published: 42 Ill. Reg. 13418 – 7/13/18

-Expiration of Second Notice: 12/9/18

14. Hospital Reimbursement Changes (89 Ill. Adm. Code 152)
-First Notice Published: 42 Ill. Reg. 13420 – 7/13/18

-Expiration of Second Notice: 12/9/18

Human Services

15. Medicaid Community Mental Health Services Program (New Part) (59 Ill. Adm. Code 132)
-First Notice Published: 42 Ill. Reg. 7408 – 4/20/18

-Expiration of Second Notice: 11/22/18

16. Medicaid Community Mental Health Services Program (Repealer) (59 Ill. Adm. Code 132)
-First Notice Published: 42 Ill. Reg. 7322 – 4/20/18

-Expiration of Second Notice: 11/30/18

17. Child Care (89 Ill. Adm. Code 50)
-First Notice Published: 42 Ill. Reg. 13430 – 7/13/18

-Expiration of Second Notice: 11/28/18

Innovation and Technology

18. Mandatory Cybersecurity Training (80 Ill. Adm. Code 4000)
-First Notice Published: 42 Ill. Reg. 14173 – 7/27/18

-Expiration of Second Notice: 11/15/18

Insurance

19. Minimum Standards for Individual and Group Medicare Supplement Insurance (50 Ill. Adm. Code 2008)

-42 Ill. Reg. 12464 − 7/6/18

-Expiration of Second Notice: 12/7/18

Liquor Control Commission

20. The Illinois Liquor Control Commission (11 Ill. Adm. Code 100)
-First Notice Published: 42 Ill. Reg. 7735 – 5/4/18

-Expiration of Second Notice: 11/17/18

Natural Resources

21. Public Use of State Parks and Other Properties of the Department of Natural Resources (17 Ill. Adm. Code 110)
-First Notice Published: 42 Ill. Reg. 7905 – 5/11/18

-Expiration of Second Notice: 11/24/18

Pollution Control Board

22. Emissions Reduction Market System (35 Ill. Adm. Code 205)
-First Notice Published: 42 Ill. Reg. 6572 – 4/13/18

-Expiration of Second Notice: 11/24/18

23. Water Use Designations and Site-Specific Water Quality Standards (35 Ill. Adm. Code 303)
-First Notice Published: 42 Ill. Reg. 14468 – 8/10/18

-Expiration of Second Notice: 11/18/18

Property Tax Appeal Board

24. Practice and Procedure for Appeals Before the Property Tax Appeal Board (86 Ill. Adm. Code 1910)
-First Notice Published: 42 Ill. Reg. 3862 – 3/2/18

-Expiration of Second Notice: 12/11/18

Public Health

25. Food Service Sanitation Code (Repealer) (77 Ill. Adm. Code 750)
-First Notice Published: 42 Ill. Reg. 9077 – 6/8/18

-Expiration of Second Notice: 11/16/18

26. Food Service Sanitation Code (New Part) (77 Ill. Adm. Code 750)
-First Notice Published: 42 Ill. Reg. 9136 – 6/8/18

-Expiration of Second Notice: 11/16/18

27. Control of Communicable Diseases Code (77 Ill. Adm. Code 690)
-First Notice Published: 42 Ill. Reg. 5729 – 3/30/18

-Expiration of Second Notice: 12/6/18

Revenue

28. Use Tax (86 Ill. Adm. Code 150)
-First Notice Published: 42 Ill. Reg. 6280 – 4/6/18

-Expiration of Second Notice: 11/16/18

29. Gas Revenue Tax Act (86 Ill. Adm. Code 470)
-First Notice Published: 42 Ill. Reg. 16168 – 8/24/18

-Expiration of Second Notice: 11/30/18

30. Liquor Control Act (86 Ill. Adm. Code 420)
-First Notice Published: 42 Ill. Reg. 8755 – 6/1/18

-Expiration of Second Notice: 11/16/18

31. Cigarette Tax Act (86 Ill. Adm. Code 440)
-First Notice Published: 42 Ill. Reg. 8777 – 6/1/18

-Expiration of Second Notice: 11/16/18

32. Cigarette Use Tax Act (86 Ill. Adm. Code 450)
-First Notice Published: 42 Ill. Reg. 8789 – 6/1/18

-Expiration of Second Notice: 11/16/18

State Police

33. Testing of Breath, Blood and Urine for Alcohol, Other Drugs, and Intoxicating Compounds (20 Ill. Adm. Code 1286)
-First Notice Published: 42 Ill. Reg. 15020 - 8/10/18

-Expiration of Second Notice: 11/16/18

State Universities Civil Service System

34. Furloughs (80 Ill. Adm. Code 250)
-First Notice Published: 41 Ill. Reg. 15224 - 12/26/17

-Expiration of Second Notice: 11/15/18

Student Assistance Commission

35. Grant Program for Dependents of Correctional Officers (23 Ill. Adm. Code 2731)
-First Notice Published: 42 Ill. Reg. 16191 – 8/24/18

-Expiration of Second Notice: 12/1/18

36. Grant Program for Dependents of Police or Fire Officers (23 Ill. Adm. Code 2732)
-First Notice Published: 42 Ill. Reg. 16193 – 8/24/18

-Expiration of Second Notice: 12/1/18

Teacher Retirement Systems

37. The Administration and Operation of the Teachers' Retirement System (80 Ill. Adm. Code 1650)
-First Notice Published: 42 Ill. Reg. 16477 - 9/7/18

-Expiration of Second Notice: 12/8/18

PEREMPTORY RULEMAKING

Human Services

38. Supplemental Nutrition Assistance Program (SNAP) (89 Ill. Adm. Code 121)
-First Notice Published: 42 Ill. Reg. 18531 - 10/12/18

EMERGENCY RULEMAKINGS

Capital Development Board

39. Capital Development Board Procurement Practices for the Quincy Veterans' Home (44 Ill. Adm. Code 930)
-First Notice Published: 42 Ill. Reg. 17899 - 10/5/18

Healthcare and Family Services

40. Specialized Health Care Delivery Systems (89 Ill. Adm. Code 146)
-First Notice Published: 42 Ill. Reg. 17935 - 10/5/18

Human Services

41. Temporary Assistance for Needy Families (89 Ill. Adm. Code 112)
-First Notice Published: 42 Ill. Reg. 18495 - 10/12/18

Public Health

42. Health Care Employee Vaccination Code (77 Ill. Adm. Code 956)
-First Notice Published: 42 Ill. Reg. 17942 - 10/5/18

Secretary of State

43. Grant Application and Award Procedures – Census Participation and Immigrant Community Assistance Grants (89 Ill. Adm. Code 1500)
-First Notice Published: 42 Ill. Reg. 18511 - 10/12/18

Student Assistance Commission

44. Grant Program for Dependents of Correctional Officers (23 Ill. Adm. Code 2731)
-First Notice Published: 42 Ill. Reg. 19098 – 10/19/18

45. Grant Program for Dependents of Police or Fire Officers (23 Ill. Adm. Code 2732)
-First Notice Published: 42 Ill. Reg. 19105 – 10/19/18

AGENCY RESPONSE

Governor's Office of Management and Budget

46. Grant Accountability and Transparency Act (GATA) (44 Ill. Adm. Code 7000)
-First Notice Published: 41 Ill. Reg. 12265 - 10/6/18
-Agency Response: Agree

JOINT COMMITTEE ON ADMINISTRATIVE RULES
ILLINOIS GENERAL ASSEMBLY

SECOND NOTICES RECEIVED

The following second notices were received during the period of October 23, 2018 through October 29, 2018. The following rulemakings are scheduled for the November 13th meeting. Other items not contained in this published list may also be considered. Members of the public wishing to express their views with respect to a rulemaking should submit written comments to the Committee at the following address: Joint Committee on Administrative Rules, 700 Stratton Bldg., Springfield IL 62706.

Second Notice Expires	Agency and Rule	Start of First Notice	JCAR Meeting
12/6/18	Department of Public Health, Control of Communicable Diseases Code (77 Ill. Adm. Code 690)	3/30/18 42 Ill. Reg. 5729	11/13/18
12/7/18	Department of Insurance, Minimum Standards for Individual and Group Medicare Supplement Insurance (50 Ill. Adm. Code 2008)	7/6/18 42 Ill. Reg. 12464	11/13/18
12/8/18	Teachers' Retirement System of the State of Illinois, The Administration and Operation of the Teachers' Retirement System (80 Ill. Adm. Code 1650)	9/7/18 42 Ill. Reg. 16477	11/13/18
12/9/18	Department of Healthcare and Family Services, Medical Payment (89 Ill. Adm. Code 140)	7/13/18 42 Ill. Reg. 13411	11/13/18
12/9/18	Department of Healthcare and Family Services, Hospital Services (89 Ill. Adm. Code 148)	7/13/18 42 Ill. Reg. 13415	11/13/18
12/9/18	Department of Healthcare and Family Services, Diagnosis Related Grouping (DRG) Prospective Payment System (PPS) (89 Ill. Adm. Code 149)	7/13/18 42 Ill. Reg. 13418	11/13/18

12/918	Department of Healthcare and Family Services, Hospital Reimbursement Changes (89 Ill. Adm. Code 152)	7/13/18 42 Ill. Reg. 13420	11/13/18

EXECUTIVE ORDER

2018-13
Executive Order Establishing the Autonomous Illinois Initiative

WHEREAS, the State of Illinois is home to one of the most robust and significant transportation networks in the nation and is continuously improving its safety, reliability, and efficiency; and

WHEREAS, rapidly advancing connected and automated technologies in passenger and freight vehicles, as well as supporting infrastructure and data, can profoundly improve Illinois residents' lives and communities; and

WHEREAS, connected technology enables vehicles to exchange information externally by means of wireless communication, and automated technology allows vehicles themselves to perform all functions necessary to operate; and

WHEREAS, Illinois law currently allows connected and automated vehicles to operate on Illinois roads with a licensed driver in control of the driving task; and

WHEREAS, a recent amendment to the Illinois Vehicle Code, 625 ILCS 5/11-208(e-5), gives the State sole authority to govern automated vehicles' operation on Illinois roads; and

WHEREAS, the development of Connected and Automated Vehicle (CAV) technologies and supporting infrastructure will facilitate life-saving long-term roadway safety solutions; and

WHEREAS, accidents on Illinois roads killed more than 1,000 people in each of the last two years; and

WHEREAS, human error is a major factor in 94 percent of all fatal crashes; and

WHEREAS, Illinois can significantly reduce fatal and non-fatal crashes on its roads by reducing opportunities for human error; and

WHEREAS, reduction in human error has already been achieved through advanced driver assistance technologies, including blind spot detection technology that notifies a driver of a vehicle in the blind spot and lane departure warning systems that warn the driver if the vehicle is leaving its lane; and

WHEREAS, development and use of more CAV technologies can further reduce human error while increasing environmentally sustainable, alternative fuel usage and providing convenient, affordable transportation for underserved communities and mobility-impaired individuals such as disabled and elderly people; and

WHEREAS, Illinois – as the nation's freight hub – in partnership with private industry, provides an unparalleled platform to develop and deploy CAV technologies across transportation modes, particularly as these technologies relate to efficient movement of goods; and

WHEREAS, Illinois' first-class higher-education system includes world-renowned research facilities that foster a mission to lead in innovation; and

WHEREAS, State relationships with private industry, universities, national labs, and other public transportation entities will stimulate research to facilitate application of life-saving CAV technologies and accelerate the development of fully automated vehicles; and

WHEREAS, realizing CAV systems' full benefits requires sustained coordination and collaboration between public agencies, private industry, non-profit organizations, and the public; and

WHEREAS, federal, state, and local transportation entities must continue to prioritize innovative programs that promote CAV technological advancement, remove barriers to introduction, invite increased economic activity, and examine changing workforce needs to prepare for new employment opportunities;

THEREFORE, I, Bruce Rauner, Governor of Illinois, by virtue of the executive authority vested in me by Section 8 of the Article V of the Constitution of State of Illinois, do hereby order as follows:

I. Interagency Coordination to Launch and Support Autonomous Illinois Initiative

The Illinois Department of Transportation (IDOT), shall lead the "Autonomous Illinois" initiative to promote the development, testing, and deployment of CAV technologies and related infrastructure and data needs within Illinois. To achieve the goals of this initiative, IDOT shall partner with other state agencies to take the following steps, among others:

1. Review CAV research, pilot projects, and Federal, state, and international action to identify best practices regarding: vehicle testing, technology deployment, law enforcement collaboration, insurance coverage, liability determinations, data-sharing arrangements, privacy issues, and infrastructure needs;
2. Evaluate and address current laws and regulations that may impede safe CAV and related infrastructure testing, deployment, and operation;
3. Whenever appropriate, inform Illinois agencies, partner entities, and the public about the work of Autonomous Illinois and its findings;

4. Pursue opportunities to make Illinois a leader in the safe and efficient movement of goods and people by means of connected and automated transportation;
5. Collaborate with industry experts on the latest developments in CAV systems, cybersecurity, network infrastructure, Internet of Things applications, and other innovative areas;
6. Work with state agencies, local municipalities, universities, private industry, and other stakeholders to strengthen the responsible and anonymized collection, sharing, and analysis of CAV-generated data to enhance planning, operations, and maintenance throughout the state;
7. Work with state agencies, private industry, advocacy groups, non-profit organizations, local communities, and other stakeholders to identify areas of interest and potential pilot projects, especially relating to improved safety and mobility for the elderly, disabled, and underserved populations;
8. Develop and implement a plan to address changing education and workforce training needs relating to CAV technology development;
9. Identify economic development opportunities to foster a pro-growth business environment that invites job creation;
10. Identify public-private partnership opportunities to increase efficiency in our transportation network and to seek savings for taxpayers; and
11. Maintain an easily accessible website to provide updates on the Autonomous Illinois initiative and other educational resources for the public and interested stakeholders.

II. Creation of the Autonomous Illinois Testing Program

The Autonomous Illinois Testing Program (the Program), which IDOT will administer, is hereby established with the goal of encouraging partnership between the State and entities developing CAV technology and related infrastructure. The Program will facilitate legal testing and programs on public roads or highways in the State, where a licensed driver remains behind the wheel and able to take control of the vehicle at all times. Under the Program, IDOT will collect and maintain up-to-date information on the CAV landscape in Illinois to promote sound public policy that fosters innovation and benefits the State and the public.

Voluntary participants in the Program shall operate under the below terms and conditions:

1. For the purposes of this Executive Order, the following definitions apply:

    a. "CAVs" can mean either "automated vehicle(s)" or "connected vehicle(s)".
    b. "Automated vehicle(s)" means those vehicles equipped with hardware and software that are collectively capable of performing all the real-time

operational and tactical functions required to operate a vehicle under the conditions for which the hardware and software were designed.

c. "Connected vehicle(s)" means those vehicles that use wireless communication to communicate and exchange information with other vehicles, infrastructure, other devices outside the vehicle, and external networks.

2. IDOT shall create a registration system with the State for entities wishing to conduct safe pilots or tests of CAVs. IDOT shall create and make accessible a notification form that participants shall complete and file each calendar year with IDOT. IDOT shall have authority to revise the form as new technology and circumstances necessitate. The current form shall require a participating entity to annually provide the following information, in addition to any other requirements established by IDOT:

a. Name and business address of the entity intending to test CAV technology;
b. Identification information about the vehicle(s) to be used in testing, including make(s), model(s), and license plate number(s);
c. Name(s), driver's license number, state of issuance and contact information of any designated operator the entity authorizes to operate a CAV during testing;
d. Summary of the training completed by vehicle operators;
e. Name(s) of the municipalities or other areas of the state where the entity intends to test CAVs;

The current form shall further require the entity to annually certify compliance with the following requirements, in addition to any other requirements established by IDOT:

a. For the testing program's duration, a driver properly licensed to operate the vehicle will occupy the driver's seat and remain able to assume control of the vehicle when required;
b. For the testing program's duration, only trained employee(s), contractor(s), or other persons authorized by the entity developing CAV technology will operate or monitor all vehicles;
c. Each vehicle the entity tests complies with all applicable Federal Motor Vehicle Safety Standards or with the Federal Motor Carrier Safety Administration regulations, except to the extent exempted under applicable Federal laws, and can comply with all state traffic and safety laws; and

d. Each vehicle is covered by motor vehicle insurance or other type of financial responsibility as required by law.

3. IDOT shall make the notification form for testing entities available on the Autonomous Illinois Initiative's website. Participating entities may implement legal testing programs under the Program immediately after providing notification to IDOT and shall observe the requirements listed in this Executive Order.
4. IDOT shall, upon request from entities interested in testing, help identify appropriate communities to conduct testing. IDOT may promote via the Autonomous Illinois Initiative's website any community, public agency, or academic institution's interest in hosting or facilitating certain types of CAV testing to partner private entities with communities seeking to benefit from CAV innovations.
5. IDOT shall file with the Governor a report on the status of the Program on or before every December 31 and June 30 until the Program is discontinued. The reports shall include, at a minimum, the number of participating registrants, the dispersion of testing across the State, and any obstacles that have delayed or might delay achieving the goals of the Program. The reports may also include applicable analytics and any proposed laws, policies, or rules that might benefit the Program and advance further development and use of CAV technologies in Illinois.

IDOT retains the authority to suspend an entity's participation in the Program if there is clear evidence that the technology used by a particular vehicle or tested by a particular entity is unsafe for testing on public roads or violates the terms of the Program. Before a suspended entity is allowed to resume participation in the Program, it must demonstrate to IDOT that the technology will comply with Program requirements.

III. Savings Clause

This Executive Order does not contravene, and shall not be construed to contravene, any federal law, state statute, or collective bargaining agreement.

IV. Prior Executive Orders

This Executive Order supersedes any contrary provision of any other prior Executive Order.

V. Severability Clause

If any part of this Executive Order is found invalid by a court of competent jurisdiction, the remaining provisions shall remain in full force and effect. The provisions of this Executive Order are severable.

VI. Effective Date

This Executive Order shall take effect immediately upon filing with the Secretary of State.

Issued by Governor: October 25, 2018
Filed with Secretary of State: October 25, 2018

ILLINOIS ADMINISTRATIVE CODE
Issue Index - With Effective Dates

Rules acted upon in Volume 42, Issue 45 are listed in the Issues Index by Title number, Part number, Volume and Issue. Inquiries about the Issue Index may be directed to the Administrative Code Division at (217) 782-7017/18.

PROPOSED RULES

89 - 140		19557
50 - 3501		19595
86 - 100		19605

ADOPTED RULES

71 - 400	10/23/2018	19693
71 - 400	10/23/2018	19696
47 - 110	10/29/2018	19976
68 - 1330	11/9/2018	20022
89 - 140	10/26/2018	20059
59 - 116	10/23/2018	20083
50 - 551	10/29/2018	20091
50 - 752	10/29/2018	20093
50 - 903	10/29/2018	20098
50 - 904	10/29/2018	20101
50 - 940	10/29/2018	20108
50 - 945	10/29/2018	20113
11 - 422	11/1/2018	20115
11 - 502	11/1/2018	20121
86 - 475	10/25/2018	20127

EXECUTIVE ORDERS AND PROCLAMATIONS

18 - 13	10/25/2018	20168